Code on Structural Concrete (EHE-08)

Articles and Annexes

CONTENTS

CHAPTER 3. ACTIONS

CHAPTER 4. MATERIALS AND GEOMETRY

TITLE 2. STRUCTURAL ANALYSIS

CHAPTER 5. STRUCTURAL ANALYSIS

TITLE 9. MAINTENANCE

CHAPTER 18. MAINTENANCE

CONTENTS

Annexes

ANNEX 11. TOLERANCES

ANNEX 12. SPECIFIC CONSTRUCTION AND CALCULATION ASPECTS OF ONE-WAY FLOOR SLABS WITH PRECAST BEAMS AND HOLLOW-CORE SLABS

ANNEX 13. STRUCTURE'S CONTRIBUTION TO SUSTAINABILITY INDEX

ANNEX 20. CHECKLIST FOR CONTROL OF THE DESIGN

1. Calculation report
    - 1.1. Geometric study
    - 1.2. Geotechnical report
    - 1.3. Actions
        - 1.3.1. Identification and consistency
        - 1.3.2. Actions during the construction process
    - 1.4. Structural proposal
    - 1.5. Structural models
    - 1.6. Calculation of forces
        - 1.6.1. Combinations of actions
        - 1.6.2. Weighting coefficients
        - 1.6.3. Calculation methods or computer programs used
        - 1.6.4. Data entry in programs for the calculation of forces
        - 1.6.5. Outputs of results of calculation programs
        - 1.6.6. Consideration of the construction process
    - 1.7. Checking of Limit States
        - 1.7.1. Consistency between results of the calculation and checking forces
        - 1.7.2. Characteristics of materials and reduction factors
        - 1.7.3. Dimensioning and checking
        - 1.7.4. Durability
        - 1.7.5. Fire resistance
        - 1.7.6. Seismic resistance
        - 1.7.7. Consistency of dimensioning with the models
        - 1.7.8. Impact on the construction process
        - 1.7.9. Case of specific elements
        - 1.7.10. Consistency with geotechnical report
2. Drawings
    - 2.1. Consistency with calculation report
    - 2.2. Consistency with other definition drawings of the work
    - 2.3. Graphic documentation
3. Technical specifications
    - 3.1. Consistency with calculation report
    - 3.2. Consistency with structural plans
    - 3.3. Tolerances

ANNEX 21. SUPPLY AND CONTROL DOCUMENTATION

1. Documentation prior to supply
    - 1.1. Documentation on quality mark
    - 1.2. Other documentation
        - 1.2.1. Cements
        - 1.2.2. Water
        - 1.2.3. Aggregates
        - 1.2.4. Admixtures
        - 1.2.5. Additions
        - 1.2.6. Concrete
        - 1.2.7. Steel for passive reinforcements
        - 1.2.8. Steel for active reinforcements
        - 1.2.9. Passive reinforcements
        - 1.2.10. Prestressing systems

CHAPTER 1

GENERAL PRINCIPLES

Article 1. Object

This Code on Structural Concrete (*Spanish abbreviation – EHE*) is the regulatory framework laying down the requirements which must be met by concrete structures to satisfy structural safety and security requirements in case of fire, in addition to the protection of the environment, providing procedures which enable their compliance with sufficient technical guarantees to be demonstrated.

The requirements must be met in the design and the construction of concrete structures, as well as during the maintenance thereof.

This Code assumes that the design, construction and inspection of the structures which constitute its scope are carried out by technicians and operators having the necessary expertise and sufficient experience. Furthermore, it is taken as fact that these structures are intended for the use for which they have been designed and shall be suitably maintained during their working life.

The notation, the units and the terminology used in this Code shall be those laid down in Annex 1.

Article 2. Scope

This Code shall apply to all structural concrete structures and elements, for building or for public works, with the following exceptions:

- Composite structural elements of structural steel and concrete, and, in general, mixed structures of structural concrete and other material of a different nature having a load bearing function;
- structures in which the prestressing action is introduced through active reinforcements outside of the depth of the element;
- structures made with special concretes not specifically covered by this Code, such as heavy aggregate concretes, refractory concretes and compound concretes with sawdust or other similar substances;
- structures to be exposed to temperatures over 70°C under normal circumstances;
- concrete pipes used for the distribution of fluid of any kind, and
- dams.

Structural concrete elements may be constructed from plain, reinforced or prestressed concrete.

When, in accordance with the characteristics of the structure, specific legislation on actions exists, this Code shall apply in addition thereto.

When, in the light of the characteristics of the work, defined by the Owners, the structure may be considered as a special or specific work, this Code shall apply together with the amendments and additional provisions laid down by the Designer, under his responsibility, to satisfy the requirements laid down in this Code, with the same level of guarantee.

Article 3. General considerations

All persons involved in the design, construction, inspection and maintenance of concrete structures are obliged to know and apply this Code.

In order to ensure that a concrete structure satisfies the requirements laid down in Article 5 of this Code, persons involved must check compliance with the requirements laid down herein on the design, construction, inspection and maintenance of the structure.

To justify that the structure complies with the requirements laid down in this Code, the Designer and the Project Manager may:

a) Adopt technical solutions which comply with the procedures laid down in this Code, the implementation of which is sufficient to provide proof of the fulfillment of the requirements laid down herein, or
b) Adopt alternative solutions which partially or totally deviate from the procedures laid down in this Code. In order to do this, the Designer and the Project Manager may, in line with their competences and under their own responsibility, and upon the agreement of the Owner, adopt alternative solutions (by means of different calculation systems, construction provisions, inspection procedures, etc.) provided that it may be proven by means of documents that the structure fulfils the requirements of this Code due to the fact that its specifications are at least equivalent to those obtained by the implementation of the procedures laid down herein.

Article 4. General conditions

4.1. Administrative conditions

Within the framework of this Code, only construction products lawfully marketed in countries which are members of the European Union or signatories to the agreement on the European Economic Area may be used, and provided these products, fulfilling the regulations in any European country member, guarantee an equivalent level regarding safety and intended use to the one requested in this Code.

This equivalence level will be accredited regarding article 4.2, or, if it is the case, article 16 of the Directive 89/106/CEE of the Council, of 21st December, 1988, regarding the legal, reglamentary and administrative requirements of the Member States on construction products.

Specifications in the above paragraphs shall also apply to the construction products produced or legally marketed in a Country with an agreement on the European Economic Area, when this agreement recognizes to these products the same treatment to those produced or marketed in a state member of the European Union. In these cases the level of equivalence shall be checked according to the procedures included in the referred Directive.

For the purposes of this Code, it shall be understood that the UNE, UNE EN or UNE EN ISO standards referred to in the Articles are always the versions listed in Annex No. 2, except in the case of UNE EN standards transposed from EN standards whose reference has been published in the Official Journal of the European Union within the framework of Directive 89/106/EEC relating to construction products, in which case the reference must be linked to the latest Commission Communication which includes this reference.

Quality marks of a voluntary nature which facilitate the fulfilment of the requirements laid down in this Code may be recognised by the Public Administrations competent within the area of construction of any Member State of the European Economic Area and may relate to the design

of the structure, to the products, to the processes for the construction thereof or to the consideration of environmental criteria.

4.2. Technical conditions for conformity with this Code

4.2.1. Technical conditions for products, equipment and systems

The materials and the construction products permanently incorporated into the structures (concrete, cement, aggregates, corrugated steel, manufactured reinforcements, prestressing systems, precast elements, etc.) must possess the appropriate characteristics for the structure to fulfil the requirements laid down in this Code, for which the conformity thereof must be checked pursuant to the criteria laid down in Title 8.

The characteristics of the materials used, where applicable, in the manufacture of the products referred to in the previous paragraph must permit that these, following their manufacture, as appropriate, fulfil the requirements of this Code, for which reason they must comply with the specifications laid down for these materials.

4.2.2. Technical conditions for the design project

The design project must describe the structure, providing justification for the solution adopted and defining the technical requirements of the construction works in sufficient detail in order that they may be unequivocally assessed and interpreted during their execution.

In particular, the design shall describe the planned works in sufficient detail, in such a way that it may be explicitly checked that the solutions adopted fulfil the requirements of this Code and other technical legislation applicable thereto. This definition shall include at least the following information:

a) the technical characteristics of each construction unit, with an indication of the conditions for the construction thereof and the checks and inspections to be carried out to check the conformity thereof with that indicated in the design,
b) the minimum technical characteristics which the products, equipment and systems permanently incorporated into the planned structure must fulfill, as well as the conditions for the supply thereof, the quality guarantees and the acceptance inspection which must be carried out.
   In light of the possible greater technical guarantees and traceability which may be associated with quality marks, the Designer shall assess the inclusion, in the corresponding memorandum of specific technical requirements, of the requirement to use materials, products or processes which lay down an additional level of guarantee pursuant to Annex 19 to this Code.
c) the load tests and compulsory verifications on the built structure, as appropriate, and
d) the instructions for use and maintenance of the structure.

4.2.3. Technical conditions for the construction

Construction work on the structure shall be carried out subject to the design project and to the modifications which, under their responsibility and in line with their competences, are authorised by the Project Manager, with the agreement, where appropriate, of the Owners. Furthermore, they must comply with the Project Manager's Code, to regulations applicable thereto and to standards of good building practice.

During the construction, the inspection activities necessary to check the conformity of the processes used therein, the conformity of the materials and products arriving at the site, as well as the conformity of those which are prepared on-site for the purpose of being definitively incorporated therein shall be implemented.

In response to the same guarantee criteria laid down in the previous section, the Project Manager shall assess the suitability of calling for products or processes that have an additional guarantee level pursuant to Annex 19 to this Code, even in the case where such a requirement has not been laid down in the design.

During the construction of the work, the Project Manager shall draw up the documentation required by law which must, as a minimum, include an inventory listing the main events taking place in the construction, a collection of plans reflecting the final state of the work exactly as constructed and the documentation corresponding to the quality inspection carried out during the work, pursuant to the provisions laid down in the design and in this Code.

Article 5. Requirements

In accordance with current legislation, and for the purpose of guaranteeing the safety of persons, animals and goods, the welfare of society and the protection of the environment, concrete structures must be suitable for use for the entire period of working life for which they have been built. In order to do this, they must satisfy the following requirements:

a) structural safety and functionality, consisting in reducing, to acceptable limits, the risk that the structure has inadequate mechanical behaviour under the foreseeable actions and influences to which it may be subject during its construction and intended use, taking into account the whole of its working life,
b) fire safety, consisting in reducing, to acceptable limits, the risk that users of the structure suffer injury arising from an incident of accidental origin, and
c) hygiene, health and the protection of the environment, as appropriate, consisting in reducing, to acceptable limits, the risk that inappropriate impacts are caused to the environment as a result of the construction of the works.

In order to fulfil the above mentioned requirements, the requirements listed in this Article must be fulfilled. In some cases, the implementation of the procedures laid down in this Code shall suffice for the checking of the requirements, whilst in others, they must be supplemented with that laid down by other regulations in force of a more specific nature in accordance with the use of the structure.

In any case, the Owners must lay down the design working life of the structure at the start of the design, which may be no less than that indicated in the corresponding specific regulations, or, in the absence of these, than the values laid down in Table 5.1.

Table 5.1. Design working life of the various types of structure (1)

Type of structure	Design working life
Structures of a temporary nature(2)	Between 3 and 10 years
Replaceable elements not forming part of the main structure (for example, handrails, pipe supports)	Between 10 and 25 years
Agricultural or industrial buildings (or installations) and maritime works	Between 15 and 50 years
Housing or office buildings, bridges or crossings of a total length of less than 10 metres and civil engineering structures (except maritime works) having a low or average economic repercussion	50 years
Buildings of a monumental nature or having a special importance	100 years
Bridges of a total length equal to or greater than 10 metres and other civil engineering structures having a high economic repercussion	100 years

(1) When a structure consists of different members, different working life values may be adopted for such members, always in accordance with the type and characteristics of the construction thereof.

(2) In accordance with the purpose of the structure (temporary exposure, etc.). Under no circumstances shall structures with a design working life greater than 10 years be regarded as temporary structures.

The Owners may also lay down other additional requirements, such as, for example, appearance, in which case they must identify the requirements connected with the achievement of the aforementioned additional requirements prior to implementing the design, in addition to the criteria for the checking thereof.

The aforementioned requirements shall be met by means of a design which includes an appropriate selection of the structural solution and the construction materials, a careful construction compliant with the design, a suitable inspection of the design, where appropriate; as well as of the construction and operation, together with an appropriate use and maintenance.

5.1. Demands

The requirements which must be fulfilled by a concrete structure in order to satisfy demands shall be those listed below.

5.1.1. Demands relating to the structural safety requirement

In order to satisfy this requirement, structures must be designed, constructed, inspected and maintained in such a way that they fulfill certain minimum reliability levels for each of the requirements laid down in the following sections, in accordance with the safety system laid down in the group of European standards EN 1990 to EN 1999 "Structural Eurocodes".

It shall be understood that the fulfilment of this Code, supplemented by the corresponding specific regulations relating to actions, shall be sufficient to guarantee that this structural safety requirement is satisfied.

5.1.1.1. Strength and stability requirement

The strength and stability of the structure shall be sufficient in order that no non-permissible risks arise as a consequence of foreseeable actions or influences, both during the construction and the usage phase thereof, being maintained throughout the expected working life of the structure. Furthermore, any extraordinary event must not give rise to consequences that are disproportionate in relation to the original cause.

The reliability level which must be guaranteed in concrete structures shall be defined by their reliability index β50 for a reference period of 50 years, which, in general, must not be lower than 3.8. In the case of specific structures or structures of little importance, the Owners may adopt a different index.

The procedures laid down in this Code for the checking of the Ultimate Limit States, together with the other criteria relating to construction and inspection, shall allow this requirement to be met.

5.1.1.2. Aptitude for service requirement

The aptitude for service shall comply with the anticipated use of the structure, in such a way that no unacceptable deformations are produced, the likelihood of a dynamic behaviour unacceptable for the comfort of users is limited to an acceptable level, and, furthermore, there are no unacceptable deteriorations or cracks.

It shall be understood that the structure has acceptable deformations when it fulfils the deflection limits laid down by specific applicable regulations. In the case of building structures, the limits laid down in Section 4.3.3 of the “Structural safety” Basic Document of the Technical Building Code shall be used.

Furthermore, in the absence of specific additional requirements (tightness, etc.), the characteristic crack openings shall be no greater than the maximum crack openings (wmax) laid down in Table 5.1.1.2

Table 5.1.1.2

Class of exposure, according to Article 8	w_{max} [mm]	
	Reinforced concrete (for the combination of quasi-permanent actions)	Prestressed concrete (for the combination of frequent actions)
I	0.4	0.2
IIa, IIb, H	0.3	0.2(1)
IIIa, IIIb, IV, F, Qa(2)	0.2	Decompression
IIIc, Qb(2), Qc(2)	0.1	

(1) It must also be checked that the active reinforcements are located in the compressed area of the section, under the combination of quasi-permanent actions.

(2) The limitation relating to the class Q shall only apply in the case where chemical attack may affect the reinforcement. In other cases, the limitation corresponding to the corresponding general class shall apply.

It shall be understood that a structural element has acceptable vibrations when it complies with the limits laid down by specific applicable regulations. In the case of building structures, the limits laid down in Section 4.3.4 of the “Structural safety” Basic Document of the Technical Building Code shall be used.

The procedures laid down in this Code for the checking of the Serviceability Limit States, together with the other criteria relating to construction and inspection, shall allow this requirement to be met.

The level of reliability which must be guaranteed in concrete structures for the aptitude for service thereof shall be defined by their reliability index β_{50} for a period of 50 years, which, under general circumstances, must be no less than 1.5.

5.1.2. Demands relating to the safety requirement in case of fire

In order to satisfy this requirement, where appropriate, works must be designed, constructed, inspected and maintained in such a way that a series of requirements, including the fire resistance of the structure, are fulfilled.

The fulfilment of this Code is not, therefore, sufficient for the fulfillment of this requirement. It shall also be necessary to fulfill the provisions of other applicable regulations in force.

5.1.2.1. Structural fire resistance requirement

The structure must maintain its fire resistance for the time laid down in the corresponding specific regulations applicable thereto in such a way that the propagation of fire is limited and the evacuation of occupants and assistance of fire-fighting and rescue teams facilitated.

In the case of building structures, the fire resistance required for each structural component is defined by that established in the Basic Document DB-SI of the Technical Building Code.

Recommendations are given in Annex 6 to this Code regarding the checking of fire resistance of structural concrete elements for the purpose of preventing a premature collapse of the structure".

5.1.3. Requirements relating to the hygiene, health and environment requirement

When it is established that this requirement has been fulfilled, structures must be designed, constructed and inspected in such a way that the environmental quality requirement of the construction is fulfilled.

The fulfillment of this Code is sufficient for the satisfaction of this requirement without prejudice to the fulfilment of the provisions of the remaining legislation in force of an environmental nature which may be applicable.

5.1.3.1. Environmental quality requirement of the construction

When so required, the construction of the structure must be designed and executed in such a way that the generation of environmental impacts caused thereby is minimized, promoting the reuse of materials and preventing, wherever possible, the generation of waste.

CHAPTER 2

SAFETY CRITERIA AND DESIGN BASIS

Article 6. Safety criteria

6.1 Principles

The demands of the safety and stability requirement, as well as those relating to the aptitude for service requirement may be expressed in terms of the overall probability of failure, connected with the reliability index, as indicated in 5.1.

The required reliability is ensured in this Code by means of the adoption of the Limit States method as laid down in Article 8. This method permits the random nature of the stress, strength and dimensional variables having an impact on the design to be taken into account in a simple fashion. The design value of a variable is obtained from its main representative value, assessed by means of its corresponding partial safety factor.

The partial safety factors do not take into account the influence of possible gross human errors. These faults must be avoided by means of appropriate quality inspection mechanisms which must cover all activities relating to the design, construction, use and maintenance of a structure.

6.2 Structural checking through design

Structural checking through design represents one of the possible measures to guarantee the safety of a structure and is the system proposed in this Code.

6.3 Structural checking through testing

In cases in which the rules of this Code are not sufficient or where the results of tests may give rise to a significant economy in relation to a structure, the possibility of addressing the structural dimensioning through testing shall also exist.

This procedure is not explicitly implemented in this Code and specialised literature should therefore be consulted. In any case, the planning, the execution and the assessment of the tests must take place at the reliability level laid down in this Code.

Article 7. Design situations

The design situations to be considered are those indicated below:

- Persistent situations, which correspond to the normal conditions of use of he structure.
- Temporary situations, such as those arising during the construction or repair of the structure.

- Accidental situations which correspond to exceptional conditions applicable to the structure.

Article 8 Basis of design

8.1 The Limit States design method

8.1.1 Limit States

Limit States are defined as those situations in which, when exceeded, it may be considered that the structure does not fulfil one of the functions for which it has been designed.

For the purposes of this Code, the Limit States shall be classified as:

- Ultimate Limit States
- Serviceability Limit States
- Durability Limit State

It must be checked that a structure does not exceed any of the Limit States previously laid down in any of the design situations indicated in Article 7, taking the design values of the actions, the characteristics of materials and geometric data into account.

The checking procedure for a certain Limit State consists in determining, on the one hand, the effect of the actions applied to the structure or part thereof and, on the other, the response of the structure for the limit situation being studied. The Limit State shall be guaranteed if it is verified, with a sufficient reliability index, that the structural response is no lower than the effect of the applied actions.

To determine the effect of the actions, the combined design actions according to the criteria laid down in Chapter 3 and the geometric data as defined in Article 16 must be considered, and a structural analysis carried out in accordance with the criteria laid down in Chapter 5.

For the determination of the structural response, the various criteria laid down in Title 5 should be considered, taking the design values of the materials and the geometric data into account pursuant to the provisions of Chapter 4.

In the case of the Durability Limit State, the environmental aggressivity pursuant to Article 8 of this Code must be classified and an efficient strategy implemented pursuant to Title 4 of this Code.

8.1.2 Ultimate Limit States

The designation Ultimate Limit State covers all Limit States giving rise to the failure of the structure, due to a loss in equilibrium, collapse or breakage thereof or part thereof. Ultimate Limit States must be considered as being those due to:

- failure due to excessive plastic strains, breakage or loss in stability of the structure or part thereof;
- loss in equilibrium of the structure or part thereof, considered to be a rigid solid;
- failure due to the accumulation of strains or progressive cracking under repeated loads.

In the checking of the Ultimate Limit States which include the breakage of a section or component, the condition must be satisfied

$$R_d \geq S_d$$

where:

R_d Design value of the structural response.
S_d Design value of the effect of actions.

For the assessment of the Equilibrium Limit State (Article 41) the following condition must be satisfied

$$E_{d,estab} \geq E_{d,desestab}$$

where:

$E_{d,estab}$ Design value of the effects of stabilizing actions.
$E_{d,desestab}$ Design value of the effects of destabilizing actions.

The Fatigue Limit State (Article 48) is related to the damage which may be suffered by a structure as a result of repeated variable stresses.

When checking the Fatigue Limit State, the following condition must be met:

$$R_F \geq S_F$$

where:

R_F Design value of the fatigue strength.
S_F Design value of the effect of fatigue actions.

8.1.3 Serviceability Limit States

The designation Serviceability Limit States covers all Limit States for which the required functionality, comfort or aspect requirements are not fulfilled.

When checking the Serviceability Limit States, the following condition must be met:

$$C_d \geq E_d$$

where:

C_d Permitted limit value for the Limit State to be checked (strains, vibrations, crack opening, etc.).
E_d Design value of the effect of actions (stresses, vibration level, crack opening, etc.).

8.1.4 Durability Limit State

Durability Limit State shall be understood to mean the Limit State produced by chemical and physical actions other than the loads and actions of the structural analysis which may deteriorate the characteristics of the concrete or reinforcements to unacceptable limits.

The checking of the Durability Limit State consists in verifying that the following condition is met:

$$t_L \geq t_d$$

where:

t_L Time needed for the aggressive agent to produce an attack or significant degradation.
t_d Design value of the service working life

8.2 Additional design basis aimed to durability

Before embarking on the design, the type of environment defining the aggressivity to which each structural element is to be subject must be identified.

To achieve an adequate durability, and in accordance with the type of environment, a strategy consistent with the criteria laid down in Chapter VII must be set out in the design.

8.2.1 Definition of type of environment

The type of environment to which a structural element is subject is defined by the set of physical and chemical conditions to which it is exposed, and which may give rise to its deterioration as a result of effects which differ from those relating to the loads and stresses considered in the structural analysis.

The type of environment is defined by the combination of:

- one of the general exposure classes in the presence of the corrosion of the reinforcements pursuant to 8.2.2.
- the specific exposure classes relating to the other deterioration processes appropriate to each case, from amongst those laid down in 8.2.3.

Should a structural element be subject to any specific exposure class, all of the classes must be included in the designation of the type of environment, joined together using the addition sign "+".

When a structure contains elements with different types of environment, the Designer must define groups with structural elements presenting similar environmental exposure characteristics. In order to do this, wherever possible, elements of the same type shall be grouped together (for example, piers, cover beams, foundations, etc.), with care also taken that the criteria followed are consistent with the aspects appertaining to the construction phase.

For each group, the class, or, where appropriate, the combination of classes, shall be identified which define the *aggressivity* of the environment to which its elements are subject.

8.2.2 General classes of environmental exposure in relation to the corrosion of reinforcements

Generally speaking, every structural element is subject to a single general exposure class or subclass.

For the purposes of this Code, general exposure classes are defined as those which refer exclusively to processes related to the corrosion of reinforcements and are laid down in Table 8.2.2.

In the case of non-submerged marine structures, the Designer may, under his own responsibility, adopt a general exposure class different to III provided that the distance to the coast is greater than 1.5 km and he has experimental data relating to nearby structures already in existence and located in conditions similar to those of the designed structure, as advised.

8.2.3 Specific classes of environmental exposure in relation to deterioration processes other than corrosion.

In addition to the classes laid down in 8.2.2, another series of specific exposure classes related to concrete deterioration processes other than the corrosion of the reinforcements is established (Table 8.2.3.a).

A component may be subject to no, to one or to various specific exposure classes relating to other concrete deterioration processes.

Conversely, a component may not be simultaneously subject to more than one of the subclasses defined for each specific exposure class.

In the case of structures subject to attack by chemicals (class Q), the aggression shall be classified pursuant to the criteria laid down in Table 8.2.3.b.

Table 8.2.2 General exposure classes relating to the corrosion of the reinforcements

GENERAL EXPOSURE CLASS				DESCRIPTION	EXAMPLES
Class	Subclass	Designation	Type of process		
non-aggressive		I	None	- insides of buildings, not subject to condensation, - -plain concrete elements	- structural elements of buildings, including floor slabs, protected against bad weather
Normal	High humidity	IIa	corrosion of origin different from chlorides	- interiors subject to high average relative humidities (> 65%) or to condensation - exteriors in the absence of chlorides, and exposed to rain in areas with an average annual rainfall over 600 mm - buried or submerged elements	- structural elements in non-ventilated basements -foundations, -bridge stirrups, -piers and decks in non-waterproofed areas with an average annual rainfall over 600 mm - Waterproofed bridge decks in areas with de-icing salts and average annual rainfall over 600 mm concrete elements, exposed to bad weather or in the covers of buildings in areas with an average annual rainfall over 600 mm - Floor slabs in toilets, or inside kitchens and bathrooms, or under non-protected cover
	Average humidity	I lb	corrosion of origin different from chlorides	- exteriors in the absence of chlorides, subject to the action of rain water, in areas with an average annual rainfall under 600 mm	- structural elements in external constructions protected from rain - bridge piers and decks, in areas with an average annual rainfall under 600 mm
Marine	Aerial	IIIa	corrosion by chlorides	- elements of marine structures, above the high tide level - element exteriors of structures located close to the coastline (at least 5 km)	- structural elements of buildings in the proximity of the coast - bridges in the proximity of the coast - aerial parts of breakwaters - docks and other coastal defence works port installations
	Submerged	IIIb	corrosion by chlorides	- elements of permanently submerged marine structures, below the minimum low tide level	- submerged areas of breakwaters, docks and other coastal defence works - foundations and submerged areas of bridge piers in the sea
	Tidal and splash zones	Iile	corrosion by chlorides	- elements of marine structures located in the tidal path area	- areas located in the tidal path of breakwaters, docks and other coastal defence works - areas of bridge piers above the sea, located in the tidal path
with chlorides other than from the marine environment		IV	corrosion by chlorides	- non-insulated installations in contact with water which present a high chloride content, not related to the marine - environment non-insulated surfaces exposed to de-icing salts.	- swimming pools and the insides of buildings housing these, - piles of overpasses or passageways in snowy areas - water treatment stations.

Table 8.2.3.a Specific exposure classes relating to other deterioration processes other than corrosion

SPECIFIC EXPOSURE CLASS				DESCRIPTION	**EXAMPLES**
Class	Subclass	Designation	Type of process		
Aggressive Chemical	Weak	Qa	chemical attack	- elements located in environments with contents of chemical substances capable of causing an alteration in the concrete with slow speed (see Table 8.2.3.b)	- industrial installations, with weakly aggressive substances according to Table 8.2.3.b - constructions close to industrial areas, with weak aggressivity according to Table 8.2.3.b
	Average	Qb	chemical attack	- elements in contact with sea water - elements located in environments with contents of chemical substances capable of causing an alteration in the concrete with average speed (see Table 8.2.3.b)	- spars, blocks and other elements for breakwaters - marine structures, in general - industrial installations in general with substances of average aggressivity according to Table 8.2.3.b - constructions close to industrial areas with average aggressivity according to Table 8.2.3b - installations for the carriage and treatment of waste waters with substances of average aggressivity according to Table 8.2.3.b
	Strong	Qc	chemical attack	- elements located in environments with contents of chemical substances capable of causing an alteration in the concrete with fast speed (see Table 8.2.3.b)	- industrial installations, with substances of high aggressivity in accordance with Table 8.2.3.b - installations for the carriage and treatment of waste waters with substances of high aggressivity according to Table 8.2.3.b. - constructions in the proximity of industrial areas, with high aggressivity according to Table 8.2.3b
with frost	without deicing salts	H	attack from freezing-melting	- elements located in frequent contact with water, or areas with an average relative environmental humidity over 75%, and which have an annual probability of over 50% of reaching temperatures below -5°C at least once	- constructions in mountainous areas - Winter resorts
	with deicing salts	F	attack by deicing salts	- elements intended for the passage of vehicles or pedestrians in areas with more than 5 annual snowfalls or with an average minimum temperature in the winter months under 0°C	- bridge decks or passageways in mountainous regions, in which deicing salts are used.
Erosion		E	abrasion cavitation	- elements subject to surface wear - elements of hydraulic structures in which the piezometric quota may fall below the vapour pressure of the water	- bridge piers in very rainy waterways - elements of breakwaters, docks and other coastal defence works subject to strong waves - concrete pavements - high pressure pipelines

Table 8.2.3.b Classification of chemical aggressivity

TYPE OF AGGRESSIVE ENVIRONMENT	PARAMETERS	TYPE OF EXPOSURE		
		Qa	Qb	Qc
		WEAK ATTACK	AVERAGE ATTACK	STRONG ATTACK
WATER	pH VALUE, according to UNE 83.952	6.5 - 5.5	5.5 - 4.5	< 4.5
	AGGRESSIVE CO_2 (mg CO_2/ l), according to UNE-EN 13.577	15 - 40	40 - 100	> 100
	AMMONIUM ION (mg NH_4^+ / l), according to UNE 83.954	15 - 30	30 - 60	> 60
	MAGNESIUM ION (mg Mg^{2+} / l), according to UNE 83.955	300 - 1000	1000 - 3000	> 3000
	SULPHATE ION (mg SO_4^{2-} / l), according to UNE 83.956	200 - 600	600 - 3000	> 3000
	DRY RESIDUE (mg / l), according to UNE 83.957	75 - 150	50 - 75	< 50
GROUND	BAUMANN-GULLY ACIDITY INDEX (ml/kg), according to UNE 83.962	> 200	(*)	(*)
	SULPHATE ION (mg SO_4^{2-} / kg of dry ground), according to UNE 83.963	2000 - 3000	3000 - 12000	> 12000

(*) These conditions do not arise in practice

CHAPTER 3

ACTIONS

Article 9. Classification of actions

The actions to be taken into consideration for the design of a structure or a structural component shall be those laid down by specific legislation in force, or, in the absence of this, by those indicated in this Code.

Actions may be classified according to their nature into direct actions (loads) and indirect actions (imposed strains).

Actions may be classified in accordance with their variation in time into Permanent Actions (G), Permanent Actions of a Non-Constant Value (G*), Variable Actions (Q) and Accidental Actions (A).

Article 10. Characteristic values of actions

10.1 General

The characteristic value of an action may be determined by an average value, a nominal value, or, in the cases laid down by means of statistical criteria, by a value corresponding to a determined probability of not being exceeded during a reference period, which takes account of the working life of the structure and the duration of action. The characteristic values of actions are those laid down in specific applicable legislation.

10.2 Characteristic values of permanent actions

For permanent actions in which significant dispersals are anticipated, or those which may have a certain variation during the period of service of the structure, the upper and lower characteristic values shall be taken. Otherwise, a single value may be adopted.

Generally speaking, for the weight of the structure itself, a single value determined from the nominal dimensions and the specific average weights shall be adopted as the characteristic action. For concrete elements the following densities shall be taken:

Plain concrete:	2300 kg/m^3	if $f_{ck} \leq 50$ N/mm^2
	2400 kg/m^3	if $f_{ck} > 50$ N/mm^2
Reinforced and prestressed concrete:	2500 kg/m^3	

10.3 Characteristic values of permanent actions of a non-constant value

For the determination of the rheological actions, values corresponding to the creep and shrinkage strains laid down in Article 39 shall be considered to be the characteristic values.

10.4 Characteristic values of prestressing action

10.4.1 General considerations

In general, actions due to prestressing in a structural element are determined from the prestressing forces of the tendons making up its active reinforcement. These actions vary along its path and over time.

In each tendon, by means of the jack or tensioning device used, a force, called the tensioning force, is applied, which at the outlet of the anchorage, at the side of the concrete, takes on a value of P_0, which shall be limited by the values laid down in 20.2.1.

In each section, the instantaneous losses of force ΔPi and the deferred losses of force ΔP_{dif} are calculated in accordance with 20.2.2 and 20.2.3. The characteristic value of the prestressing force P_k in each section and temporary phase is calculated from the values P_0, ΔP_i and ΔP_{dif} in accordance with 10.4.2.

10.4.2 Characteristic value of the prestressing force

The characteristic value of the prestressing force in a section and any phase is:

$$P_k = P_0 - \Delta P_i - \Delta P_{dif}$$

Article 11. Representative values of actions

The representative value of an action is the value thereof used for the checking of the Limit States.

A single action may have one or several representative values.

The representative value of an action is obtained by applying a factor Ψ_i to its characteristic value F_k.

$$\Psi_i F_k$$

The values indicated in specific applicable legislation shall be taken as the representative values of actions.

Article 12. Design values of actions

A design value of an action is defined as that obtained as the result of a partial safety factor multiplied by the representative value referred to in Article 11.

$$F_d = \gamma_f \Psi_i F_k$$

where:

F_d Design value of the action F.

y_f Partial safety factor for the considered action.

12.1 Ultimate Limit States

The values laid down in Table 12.1.a are adopted as partial safety factors for the actions for the Ultimate Limit State checks, provided that the corresponding specific legislation applicable to actions does not lay down other criteria.

In general, for permanent actions, the obtaining of the favourable or unfavourable effect thereof shall be determined weighing up all actions of the same origin with the same factor indicated in Table 12.1.a.

When the results of a check are very sensitive to variations in the magnitude of the permanent action, from one part to another in the structure, the favourable and unfavourable parts of this action shall be considered as individual actions. This shall apply in particular to the checking of the Equilibrium Limit State in which, for the favourable part, a factor γ_G = 0.9 shall

be adopted and for the unfavourable part a factor γ_G = 1.1 shall be adopted, for persistent situations, or γ_G = 0.95 for the favourable part and γ_G = 1.05 for the unfavourable part for temporary situations in the construction phase.

For the assessment of the local prestressing effects (anchorage areas, etc.) a force equivalent to the ultimate characteristic force thereof shall be applied to the tendons, obtained by multiplying the area of the tendon by the maximum unit load of the tendon without affecting the partial safety factor for the steel.

Table 12.1.a. Partial safety factors for actions, applicable for the assessment of the Ultimate Limit States

TYPE OF ACTION	Persistent or temporary situation		Accidental situation	
	Favourable effect	Unfavourable effect	Favourable effect	Unfavourable effect
Permanent	γ_G = 1,00	γ_G = 1,35	γ_G = 1,00	γ_G = 1,00
Prestressig	γ_P = 1,00	γ_P = 1,00	γ_P = 1,00	γ_P = 1,00
Permanent of a non-constant value	γ_{G*} = 1,00	γ_{G*} = 1,50	γ_{G*} = 1,00	γ_{G*} = 1,00
Variable	γ_Q = 0,00	γ_Q = 1,50	γ_Q = 0,00	γ_Q = 1,00
Accidental	-	-	γ_A = 1,00	γ_A = 1,00

12.2 Serviceability Limit States

The values in Table 12.2 shall be adopted as partial safety factors for actions for the Serviceability Limit State checks, provided that the corresponding specific legislation applicable to actions does not lay down other criteria.

Table 12.2. Partial safety factors for actions, applicable for the assessment of the Serviceability Limit States

TYPE OF ACTION		Favourable effect	Unfavourable effect
Permanent		γ_G = 1,00	γ_G = 1,00
Prestressed	Pre-tensioned reinforcement	γ_P = 0,95	γ_P = 1,05
	Post-tensioned reinforcement	γ_P = 0,90	γ_P = 1,10
Permanent of non-constant value		γ_{G*} = 1,00	γ_{G*} = 1,00
Variable		γ_Q = 0,00	γ_Q = 1,00

For temporary situations in structures with thorough inspection prestressed with pre-tensioned reinforcement, γ_P = 1.00 may be adopted as partial safety factor for the prestressing action, both if the action is favourable and unfavourable. For temporary

situations in structures with thorough inspection prestressed with post-tensioned reinforcement, γ_P = 0.95 may be adopted as partial safety factor for the prestressing action if the effect is favourable and γ_P = 1.05 if it is unfavourable. The same factors may be used for permanent situations in the case of elements with post-tensioned reinforcements with straight routing constructed in a precasting installation appertaining to the work or close thereto, with a thorough inspection, routing geometry and tensioning force, provided that the corresponding specific legislation applicable to actions does not lay down other criteria.

Article 13. Combination of actions

13.1 General principles

For each of the situations studied the possible combinations of actions shall be established. A combination of actions consists of a set of compatible actions which shall be considered as acting simultaneously for a specific check.

Generally speaking, each combination shall be formed from permanent actions, a decisive variable action and one or several concomitant variable actions. Any of the variable actions may be decisive.

13.2 Ultimate Limit States

For the various design situations, the combinations of actions shall be defined in accordance with the following criteria:

- Permanent or temporary situations:

$$\sum_{j\geq 1}\gamma_{G,j}G_{k,j}+\sum_{j\geq 1}\gamma_{G^*,j}G^*_{k,j}+\gamma_P P_k+\gamma_{Q,1}Q_{k,1}+\sum_{i>1}\gamma_{Q,i}\psi_{0,i}Q_{k,i}$$

- Accidental situations:

$$\sum_{j\geq 1}\gamma_{G,j}G_{k,j}+\sum_{j\geq 1}\gamma_{G^*,j}G^*_{k,j}+\gamma_P P_k+\gamma_A A_k+\gamma_{Q,1}\psi_{1,1}Q_{k,1}+\sum_{i>1}\gamma_{Q,i}\psi_{2,i}Q_{k,i}$$

- Seismic situations:

$$\sum_{j\geq 1}\gamma_{G,j}G_{k,j}+\sum_{j\geq 1}\gamma_{G^*,j}G^*_{k,j}+\gamma_P P_k+\gamma_A A_{E,k}+\sum_{i\geq 1}\gamma_{Q,i}\psi_{2,i}Q_{k,i}$$

where:

$G_{k,j}$	Characteristic value of permanent actions.
$G^*_{k,j}$	Characteristic value of permanent actions with a non-constant value.
P_k	Characteristic value of the prestressing action.
$Q_{k,1}$	Characteristic value of the decisive variable action.
$\psi_{0,i}\,Q_{k,i}$	Representative combination value of concomitant variable actions.
$\psi_{1,1}\,Q_{k,1}$	Representative frequent value of decisive variable actions.
$\psi_{2,i}\,Q_{k,i}$	Representative quasi-permanent values of variable actions with decisive action or with accidental action.
A_k	Characteristic value of the accidental action.
$A_{E,k}$	Characteristic value of the seismic action.

In permanent or temporary situations, when the decisive action $Q_{k,1}$ is not obvious, different possibilities shall be assessed taking into account different variable actions as decisive.

The Fatigue Ultimate Limit State, in its current state of knowledge, requires special checks which depend on the type of material in question, metallic or concrete elements, which gives rise to the following specific criteria:

- Only the situation produced by the variable fatigue load shall be considered for the fatigue testing of anchorage devices and reinforcements, taking a weighting factor equal to one unit.
- For the fatigue testing of concrete, the stresses produced by the permanent loads and the variable fatigue load shall be taken into account, taking a weighting factor equal to one unit for both actions.

13.3 Serviceability Limit States

Only persistent and temporary design situations are considered for these Limit States. In these cases, the combinations of actions shall be defined in accordance with the following criteria:

- Unlikely or characteristic combination

$$\sum_{j\geq 1}\gamma_{G,j}G_{k,j}+\sum_{j\geq 1}\gamma_{G^*,j}G^*_{k,j}+\gamma_P P_k+\gamma_{Q,1}Q_{k,1}+\sum_{i>1}\gamma_{Q,i}\psi_{0,i}Q_{k,i}$$

- Frequent combination

$$\sum_{j\geq 1}\gamma_{G,j}G_{k,j}+\sum_{j\geq 1}\gamma_{G^*,j}G^*_{k,j}+\gamma_P P_k+\gamma_{Q,1}\psi_{1,1}Q_{k,1}+\sum_{i>1}\gamma_{Q,i}\psi_{2,i}Q_{k,i}$$

- Quasi-permanent combination

$$\sum_{j\geq 1}\gamma_{G,j}G_{k,j}+\sum_{j\geq 1}\gamma_{G^*,j}G^*_{k,j}+\gamma_P P_k+\sum_{i>1}\gamma_{Q,i}\psi_{2,i}Q_{k,i}$$

CHAPTER 4

MATERIALS AND GEOMETRY

Article 14. General principles

Both the determination of the structural response and the assessment of the effect of actions must be carried out using design values for the characteristics of the materials and for the geometric data of the structure.

Article 15. Materials

15.1 Characteristic values

For the purposes of this Code, the characteristic values of the strength of materials (compressive strength of concrete and compressive and tensile strength of steels) shall be the quartile corresponding to a probability of 0.05.

With regard to the tensile strength of concrete, two characteristic values shall be used, an upper and a lower, with the first being the quintile associated with a probability of 0.95 and the second quintile associated with a probability of 0.05. These characteristic values must be adopted in alternation depending on their influence on the problem in question.

For the consideration of some of the properties used in the calculation, the average or nominal values shall be used as the characteristic values.

For the purposes of defining the characteristic values of the fatigue properties of materials, the specific criteria laid down in Article 48 shall be followed.

15.2 Design values

The design values of the properties of the materials shall be obtained from the characteristic values divided by a partial safety factor.

15.3 Partial safety factors for materials

The partial safety factor values for the materials for the study of the Ultimate Limit States shall be those indicated in Table 15.3.

Table 15.3 Partial safety factors for the materials for the Ultimate Limit States

Design situation	Concrete γ_c	Steel for passive and active reinforcements γ_s
Persistent or temporary	1.5	1.15
Accidental	1.3	1.0

The factors laid down in Table 15.3 do not apply to the checking of the Fatigue Ultimate Limit State, which shall be checked in accordance with the criteria laid down in Article 48, nor to the fire checking when Annex 6 applies.

Partial safety factor values equal to one unit shall be adopted for the study of the Ultimate Limit States.

The partial safety factors for the materials for the Ultimate Limit States in Table 15.3 may be amended in accordance with the indications laid down in 15.3.1 and 15.3.2.

The partial safety factors for the materials for the Ultimate Limit States laid down in Table 15.3 correspond to the maximum geometric deviations laid down in Point 5.1 and in 5.3.d) of Annex 11 and to a statistical inspection of the concrete laid down in 86.5.4. In accordance with the Owners, these factors may be amended when the conditions laid down in this Annex arise.

15.3.1 Modification of the partial safety factor for steel

The partial safety factor for steel may be reduced to 1.10 when at least two of the following conditions are met:

a) that the construction of the structure is closely controlled pursuant to the provisions of Chapter XVII and that the attachment tolerances of the reinforcement comply with those explicitly laid down in the design, which must be at least as demanding as those indicated in paragraph 6 of Annex No 11 to this Code.
b) that the passive or active reinforcements, depending on the case, bear an officially recognized quality mark with a guarantee level compliant with Section 8 of Annex 19 to this Code, or which form part of a precast element bearing an officially recognized quality mark with a guarantee level compliant with the aforementioned Section.
c) that the steel for the passive reinforcements bears an officially recognized quality mark

15.3.2 Modification of the partial safety factor for concrete

The partial safety factor for concrete may be reduced to 1.40 in general and to 1.35 for precast elements, when the following conditions are met simultaneously:

a) that the construction of the structure is closely controlled pursuant to the provisions of Chapter XVII and that deviations in the geometry of the cross-section in relation to the nominal cross-sections of the design comply with those explicitly laid down in the design, which must be at least as demanding as those indicated in Section 6 of Annex No 11 to this Code, and
b) that the concrete bears an officially recognized quality mark with a guarantee level compliant with Section 8 of Annex 19 to this Code, or which form part of a precast element bearing an officially recognized quality mark with a guarantee level compliant with the aforementioned Section.

Article 16. Geometry

16.1 Characteristic and design values

The nominal values laid down in the design drawings shall be adopted as characteristic and design values.

$$a_k = a_d = a_{nom}$$

In some cases, when imprecision relating to geometry have a significant effect on the reliability of the structure, the following shall be taken as design value for the geometric values:

$$a_d = a_{nom} + \Delta a$$

where *Aa* takes into account the possible unfavourable deviations to the nominal values, and is defined in accordance with the permitted tolerances.

16.2 Imperfections

In cases in which the effect of geometric imperfections is significant, these shall be taken into account in the assessment of the effect of actions on the structure.

CHAPTER 5

STRUCTURAL ANALYSIS

Article 17. General

The structural analysis shall consist in determining the effects caused by the actions on all or part of the structure, for the purpose of carrying out checks on the Ultimate and Serviceability Limit States.

Article 18. Idealisation of the structure

18.1 Structural models

In order that the analysis may be carried out, both the geometry of the structure and the actions and the support conditions shall be idealised by means of a mathematical model capable of accurately reproducing the dominant structural behaviour.

The design and the arrangement of reinforcements must be consistent with the hypotheses of the calculation model with which the forces have been obtained.

18.2 Geometric data

18.2.1 Effective flange width in linear members

In the absence of a more precise determination, in T-beams it is assumed, for checks at section level, that the normal stresses are uniformly distributed over a certain reduced width of the flanges called effective width.

18.2.2 Design spans

Except where there is special justification therefore, the distance between support axes shall be considered to be the design span.

In one-way floor slabs, when the floor slab is supported on flat or mixed slabs not centred with the supports, the axis shall be taken as that passing through the centre thereof.

18.2.3 Cross-sections

18.2.3.1 General considerations

The global analysis of the structure may be carried out, in the majority of cases, using the gross sections of the elements. In some cases, when greater precision is needed in the checking of the Serviceability Limit States, net or homogenised sections may be used in the analysis.

18.2.3.2 Gross section

Gross section shall be understood to mean that resulting from the true dimensions of the member, without deducting the spaces corresponding to the reinforcements.

18.2.3.3 Net section

Net section shall be understood to mean that obtained from the gross section after deducting the longitudinal openings made in the concrete, such as piping or recesses for the passage of active reinforcements or their anchorages and the area of the reinforcements.

18.2.3.4 Homogenized section

Homogenised section shall be understood to mean that obtained from the net section specified in 18.2.3.3, taking into account the effect of the solidification of the bonded longitudinal reinforcements and the various types of concrete in existence.

18.2.3.5 Cracked cross section

Cracked section shall be understood to mean that formed by the compressed area of the concrete and the areas of the longitudinal reinforcements, both bonded active and passive, multiplied by the corresponding coefficient of equivalence.

Article 19. Calculation methods

19.1 Basic principles

Every structural analysis must satisfy the equilibrium conditions.

Unless specified to the contrary, the compatibility conditions shall always be satisfied in the Limit States considered. In cases in which the verification of compatibility is not a direct requirement, all the appropriate ductility conditions must be satisfied and an appropriate in-service behaviour of the structure guaranteed.

Generally speaking, the equilibrium conditions shall be drawn up for the original geometry of the structure without strain. For slender structures such as those defined in Article 43, the equilibrium shall be checked for the deformed configuration (second order theory).

19.2 Types of analyses

The global analysis of a structure may be carried out in accordance with the following methodologies:

- Linear analysis.
- Non-linear analysis.
- Linear analysis with limited redistribution.
- Plastic analysis.

19.2.1 Linear analysis

Is that based on the assumption of linear-elastic behaviour of the constituent materials and on the consideration of equilibrium in the non-deformed structure. In this case the concrete gross section may be used for the calculation of stresses.

The linear elastic analysis is considered, in principle, suitable for determining stresses both in Serviceability Limit States and in Ultimate Limit States in structures of all kinds, when the secondary effects are negligible, pursuant to the provisions of Article 43.

19.2.2 Non-linear analysis

Is that which takes account of the non-linear strain deformation behaviour of materials and geometric non-linearity, that is to say, satisfaction of the equilibrium of the structure in its deformed state. The non-linear analysis may be used for both Serviceability Limit State checks and Ultimate Limit State checks.

Non-linear behaviour gives rise to the invalidity of the superposition principle and, therefore, the safety format laid down in this Code is not directly applicable to non-linear analysis.

19.2.3 Linear analysis with limited redistribution

Is that in which forces are determined from those obtained by means of a linear analysis, as described in 19.2.1, and redistributions subsequently made (increases or decreases) of forces which satisfy the conditions of equilibrium between loads, forces and reactions. Redistributions of forces must be taken into account in all aspects of the design.

Linear analysis with limited redistribution may only be used for Ultimate Limit State checks.

Linear analysis with limited redistribution requires ductility conditions for the critical sections which guarantee the redistributions required for the forces adopted.

19.2.4 Plastic analysis

Is that based on a plastic, elasto-plastic or rigid-plastic behaviour of materials and which fulfils at least one of the basic theorems of plasticity: that of the lower limit, that of the upper limit or that of unicity.

It must be ensured that the ductility of the critical sections is sufficient to guarantee the formation of the collapse mechanism laid down in the design.

The plastic analysis may only be used for Ultimate Limit State checks. This method shall not be permitted when secondary effects must be taken into account.

Article 20. Structural analysis of prestressing

20.1 General considerations

20.1.1 Definition of prestressing

Prestressing shall be understood to be the controlled application of a stress to the concrete by means of the tensioning of steel tendons. The tendons shall be made of high strength steel and may consist of wires, strands or bars.

No other forms of prestressing may be considered in this Code.

20.1.2 Types of prestressing

In accordance with the position of the tendon in relation to the cross-section, the prestressing may be:

a) Internal. In this case, the tendon is positioned inside the concrete cross-section.
b) External. In this case, the tendon is positioned outside of the concrete of the cross-section and inside the depth thereof.

In accordance with the moment of the tensioning in relation to the concreting of the component, the prestressing may be:

a) With pre-tensioned reinforcements. The concreting is carried out after having provisionally tensioned and anchored the reinforcements into fixed elements. When the concrete has acquired sufficient strength, the reinforcements are freed from their provisional anchorages and, due to bonding, the force previously introduced into the reinforcements is transferred to the concrete.
b) With post-tensioned reinforcements. The concreting is carried out before the tensioning of the active reinforcements which normally are housed in ducts or sheaths. When the concrete has acquired sufficient strength, the reinforcements

shall be tensioned and anchored.

From the point of view of the bonding conditions of the tendon, the prestressing may be:

c) Bonding. This is the case of prestressing in which, in the final state, there is an adequate bonding between the active reinforcement and the concrete of the component (point 35.4.2).
d) Non-bonding. This is the case of prestressing with post-tensioned reinforcement in which reinforcement protection systems and injections which do not create bonding between this and the concrete of the component are used (point 35.4.3).

20.2 Prestressing force

20.2.1 Limitation of force

In general, the tensioning force P_0 must provide, over the active reinforcements, a stress cr_{p0} not greater, at any point, than the lower of the following values:

$$0{,}70\, f_{p\,\max k} \quad ; \quad 0{,}85\, f_{pk}$$

where:

[$f_{p\,max,k}$ Characteristic maximum unitary load.
[f_{pk} Characteristic yield strength.

This stress may temporarily be increased up to the lower of the following values:

$$0{,}80\, f_{p\max k} \quad ; \quad 0{,}90\, f_{pk}$$

provided that, in anchorage the reinforcements into the concrete, a suitable reduction in stress is produced so that the limit referred to in the previous paragraph is attained.

In the case of prestressed elements with pre-tensioned reinforcement or post-tensioned elements in which both the steel for active reinforcements and the prestressing operator, or, where appropriate, the prefabricator has a quality mark, an increase of the previous values to the following shall be accepted:

a) permanent situations:

$$0{,}75\, f_{p\,\max k} \; ; \; 0{,}90\, f_{pk}$$

b) temporary situations:

$$0{,}85\, f_{p\max k} \; ; \; 0{,}95\, f_{pk}$$

20.2.2 Losses in members with post-tensioned reinforcements

20.2.2.1 Assessment of the instantaneous losses of force

Instantaneous losses of force are those which may arise during the tensioning activity and at the moment of anchorage the active reinforcements and depend on the characteristics of the structural element being studied. Their value in each section is:

$$\Delta P_i = \Delta P_1 + \Delta P_2 + \Delta P_3$$

where:

ΔP_1 Losses of force in the section being studied due to friction along the length of the pre-tensioned duct.

ΔP_2 Losses of force in the section being studied due to wedge penetration in the anchorages.

ΔP_3 Losses of force in the section being studied due to elastic shortening of the concrete.

20.2.2.1.1 Losses of force due to friction

The theoretical losses of force due to friction between the reinforcements and the sheaths or prestressed ducts depend on the total angular variation α of the route of the tendon between the section in question and the active anchorage which determines the stress in this section; of the distance x between these two sections; of the curve friction coefficient μ and the straight friction coefficient K or parasitic friction. These losses shall be assessed from the tensioning force P_0.

Losses due to friction in each section may be determined using the expression:

$$\Delta P_1 = P_0\left[1 - e^{-(\mu\alpha + Kx)}\right]$$

where:

μ Coefficient of friction curve.

α Sum of the absolute values of the angular variations (successive deviations), measured in radians, which describes the tendon in the distance x. It must be remembered that the routing of the tendons may be a skew curve with α having therefore to be assessed in space.

K Coefficient of parasitic friction, per linear metre.

x Distance, in metres, between the section in question and the active anchorage determining the stress therein (see Figure 20.2.2.1.1).

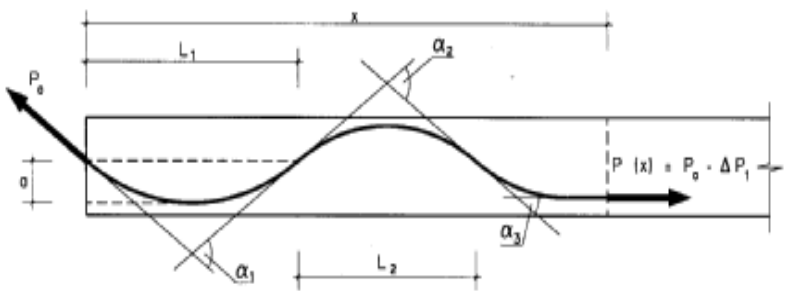

If $a \leq 0.045\ L_1$ then α_1 may be taken as $\alpha_1 = \dfrac{8a}{L_1}$; being the error less than 5‰

$$\alpha = \sum_{i=1}^{x} \alpha_i = \alpha_1 + \alpha_2 + \alpha_3$$

α = Total angular displacement

α_i = Angular displacement in segment L_i

Figure 20.2.2.1.1

The data corresponding to the values of μ and of K must be defined experimentally, having taken account of the prestressing procedure used. In the absence of specific data, the experimental values sanctioned in practice may be used.

20.2.2.1.2 Losses due to wedge penetration

In post-tensioned straight tendons of short length, the loss of force due to wedge penetration, AP_2, may be deduced using the expression:

$$\Delta P_2 = \frac{a}{L} E_p A_p$$

where:

a Penetration of the wedge.
L Total length of the straight tendon.
E_p Longitudinal strain modulus of an active reinforcement.
A_p Section of the active reinforcement.

In other cases of straight tendons and in all cases of curved traces, the assessment of the loss of stress due to wedge penetration shall be made taking friction in the ducts into account. For this, the possible variations in μ and of K may be considered upon de-tensioning the tendon, with regard to the values appearing upon tensioning.

20.2.2.1.3 Losses due to elastic shortening of the concrete

In the case of reinforcements consisting of various tendons which have been successively tensioned, upon tensioning each tendon a new elastic shortening of the concrete is produced which unloads, in the proportional part corresponding to this shortening, to those previously anchored.

When compression stress at the level of the barycentre of the active reinforcement in the tensioning phase is significant, the value of these losses, AP_3, may be calculated, if the tendons are successively tensioned in one single operation, recognising that all tendons undergo a uniform shortening, depending on the number n thereof successively tensioned, by means of the expression:

$$\Delta P_3 = \sigma_{cp} \frac{n-1}{2n} \frac{A_p E_p}{E_{cj}}$$

where:

A_p Total cross-section of the active reinforcement.
δ_{cp} Compressive stress at the centre of gravity of the active reinforcements, produced by the force $P_0 - \Delta P_1 - \Delta P_2$ and the forces due to the actions acting at the moment of tensioning.
E_p Modulus of longitudinal elasticity of the active reinforcements.
E_{cj} Modulus of longitudinal elasticity of the concrete for the age j corresponding to the moment of applying the load to the active reinforcements.

20.2.2.2 Deferred losses of prestressing

Deferred losses are those which take place over time, after the active reinforcements have been anchored. These losses are essentially due to the shortening of the concrete by creep and shrinkage and to the relaxation of the steel of such reinforcements.

The creep of the concrete and the relaxation of the steel are influenced by the losses themselves, and, therefore, it is imperative that this interactive effect be considered.

Provided that a more detailed study of the interaction of these phenomena is not carried out, the deferred losses may be assessed in an approximated fashion in accordance with the following expression:

$$\Delta P_{dif} = \frac{n\varphi(t,t_0)\sigma_{cp} + E_p \varepsilon_{cs}(t,t_0) + 0{,}80\Delta\sigma_{pr}}{1 + n\frac{A_p}{A_c}\left(1 + \frac{A_c y_p^2}{I_c}\right)\left(1 + \chi\varphi(t,t_0)\right)} A_p$$

where:

y_p Distance from the centre of gravity of the active reinforcements to the centre of gravity of the section.

n Coefficient of equivalence = E_p/E_c.

$\varphi(t,t_0)$ Creep coefficient for a loading age equal to the age of the concrete at the time of tensioning (t_0) (see 39.8).

ε_{cs} Shrinkage strain developing after the tensioning operation (see 39.7).

σ_{cp} Stress in the concrete in the fibre corresponding to the centre of gravity of the active reinforcements due to the prestressing action, own weight and dead load.

$\Delta\sigma_{pr}$ Loss due to relaxation at constant length. This may be assessed using the following expression:

$$\Delta\sigma_{pr} = \rho_f \frac{P_{ki}}{A_p}$$

with ρ_f being the value of relaxation at constant length and infinite time (see 38.9) and A_p the total area of the active reinforcements. P_{ki} is the characteristic value of the initial prestressing force having discounted the instantaneous losses.

A_c Area of the concrete section.

I_c Inertia of the concrete section.

χ Ageing factor. In a simplified fashion, and for infinite time assessments, χ = 0.80 may be adopted.

20.2.3 Losses of force in members with pre-tensioned reinforcements

For pre-tensioned reinforcements, the losses to be considered from the moment of tensioning until the transfer of the force to the concrete are:

a) wedge penetration
b) relaxation at ambient temperature until transfer
c) additional relaxation of the reinforcement due, where appropriate, to the heating process
d) thermal expansion of the reinforcement due, where appropriate, to the heating process
e) shrinkage prior to transfer
f) instantaneous elastic shortening upon transfer.

The deferred losses subsequent to the transfer are obtained in the same way as in post-tensioned reinforcements, using the values of contraction, relaxation and creep produced after the transfer. In the assessment of deformations due to creep, the effect of the heat curing process may be taken into account through the modification of the load age of the concrete t_0 for a fictitious age t_T adjusted to temperature whose expression is:

$$t_T = \sum^{n} e^{-(4000/[273+T(\Delta t_i)]-13,65)} \Delta t_i$$

where:

t_T Age of concrete adjusted to temperature.
$T(\Delta t_i)$ Temperature in degrees °C during the period of time t_i.
$T(\Delta t_i)$ Number of days with an approximately constant temperature T.

Losses due to additional relaxation of the reinforcement due to the heating process, c), may be taken into account through the use of an equivalent time t_{eq} which should be added to the time having passed since the tensioning in the relaxation functions. In order to do this, the duration of the heating process is divided into time intervals, Δt_i, each one of these having a temperature in °C, $T_{\Delta t_i}$, in such a way that the equivalent time in hours t_{eq} may be calculated as follows:

$$t_{eq} = \frac{1,14^{T_{\max}-20}}{T_{\max}-20} \sum_{i=1}^{n} (T_{\Delta t_i} - 20)\Delta t_i$$

where:

T_{max} Maximum temperature in °C reached during heat curing.

Losses due to the thermal expansion of the reinforcement due to the heating process, d), may be determined using the expression:

$$\Delta P = K \ \alpha \ E_p \ (T_{\max} - T_a)$$

where:

K Experimental coefficient, to be determined in the factory and which, in the absence of tests, may be taken as $K = 0.5$.
α Thermal expansion coefficient of the active reinforcement.
E_p Modulus of longitudinal elasticity of the active reinforcement.
T_{max} Maximum temperature in °C reached during the heat curing.
T_a Mean ambient temperature in °C during manufacture.

20.3 Structural effects of prestressing

The structural effects of the prestressing may be represented using both a set of self-balanced equivalent forces and a set of imposed strains. Both methods shall give the same results.

20.3.1 Modelling of the effects of the prestressing by means of equivalent forces

The system of equivalent forces is obtained from the equilibrium of the cable and is formed by:

- Forces and moments concentrated in the anchorages.
- Forces normal to the tendons, resulting from the curvature and changes in direction thereof.
- Tangential forces due to friction.

The value of the forces and moments concentrated in the anchorages shall be deducted from the value of the prestressing force at these points, calculated in accordance with Section

20.2, from the geometry of the cable, and from the geometry of the anchorage area (see figure 20.3.1)

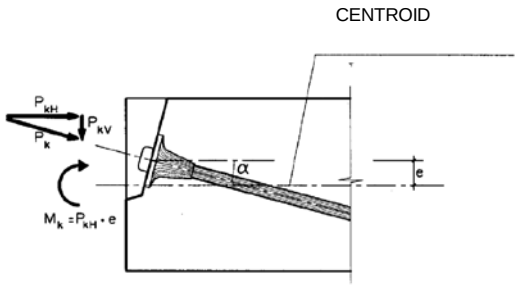

Figure 20.3.1

In the specific case of beams, with symmetry relating to a vertical plane, there shall be a horizontal component in the anchorage and another vertical component of the prestressing force and a bending moment, whose expressions shall be given by:

$$P_{k,H} = P_k \cos\alpha$$

$$P_{k,V} = P_k \, sen\alpha$$

$$M_k = P_{k,H} \, e$$

where:

α Angle formed by the route of the prestressing in relation to the directrix of the element, in the anchorage.
P_k Force in the tendon according to 20.2.
e Eccentricity of the tendon in relation to the centre of gravity of the section.

The normal forces distributed along the tendon, *n(x)*, are a result of the prestressing force and the curvature of the tendon at each point, *1/r(x).* The tangential forces, *t(x),* are proportional to the normal forces through the friction coefficient μ, according to:

$$n(x) = \frac{P_k(x)}{r(x)} \quad ; \quad t(x) = -\mu \, n(x)$$

20.3.2 Modelling of the effects of prestressing through imposed deformations

Alternatively, in the case of linear elements, the structural effects of prestressing may be introduced through the application of imposed deformations and curvatures that, in each section, are given by:

$$\varepsilon_p = \frac{P_k}{E_c A_c}$$

$$\left(\frac{1}{r}\right)_p = \frac{P_k e}{E_c I_c}$$

where:

ε_p Axial deformation due to the prestressing.
E_c Modulus of longitudinal elasticity of concrete.
A_c Area of the concrete section.
I_c Inertia of the concrete section.

e Eccentricity of the prestressing in relation to the centre of gravity of the concrete section.

20.3.3 Isostatic and statically indeterminate forces of the prestressing

The structural forces due to prestressing are traditionally defined as one of the following:

- Isostatic forces.
- Statically indeterminate forces.

The isostatic forces depend on the force of the prestressing and on the eccentricity of the prestressing in relation to the centre of gravity of the section, and may be analysed at section level. The statically indeterminate forces depend, in general, on the routing of the prestressing, on the rigidity conditions and on the support conditions for the structure and must be analysed at structure level.

The sum of the isostatic and statically indeterminate prestressing forces is equal to the total forces produced by the prestressing.

When the Limit State of Failure is observed under normal stresses of sections with bonded reinforcement, in accordance with the criteria laid down in Article 42, the design stresses must include the statically indeterminate part of the structural effect of the prestressing taking into account its value in accordance with the criteria laid down in Section 13.2. The isostatic part of the prestressing shall be considered upon assessing the strength of the section, taking into account the corresponding pre-deformation in the bonded active reinforcement.

Article 21. Flat reticular structures, one-way floor slabs and slabs

Any of the methods indicated in Article 19 may be used for the calculation of stresses in flat reticular structures.

When linear analysis with limited redistribution is used, the magnitude of the redistribution shall depend on the level of ductility in the critical sections.

Article 22. Slabs

In order for a two-way element to be considered a slab, the minimum span must be greater than four times the average width of the slab. Any of the methods indicated in Article 19 may be used for the calculation of stresses in slabs.

Article 23. Membranes and shells

Shells are superficial structural elements which, from a static point of view, are characterised by their three-dimensional resistant behaviour. Shells are usually placed under stress by the combined forces of membrane and bending, with their structural response fundamentally influenced by their geometric form, the conditions at their edge and the nature of the load applied.

Both linear and non-linear analyses are permitted for the analysis of Shells.

Plastic design is not permitted, except where duly justified in the particular case being studied.

Shells subject to compressive stresses shall be analysed taking into account possible failures due to buckling. To this end, elastic deformations shall be taken into account, and, where appropriate, those due to creep, variation in temperature and shrinkage of the concrete, the support seatings and imperfections in the form of the sheet due to inaccuracies during construction.

Article 24. D-Regions

24.1 General

D-Regions (discontinuity regions) are the structures or parts of a structure in which the general bending theory is not valid, that is to say, where the Bernoulli-Navier or Kirchhoff hypotheses do not apply. Conversely, the structures or parts of structures in which these hypotheses apply are called B regions.

D-Regions exist in a structure when there are abrupt changes in geometry (geometric discontinuity, figure 24.1.a), or in areas in which concentrated loads and reactions are applied (static discontinuity, figure 24.1.b). A D-Region may also consist of a structure in its entirety due to its form or proportions (general discontinuity). Beams of a great depth or short corbels (figure 24.1.c) are examples of general discontinuity.

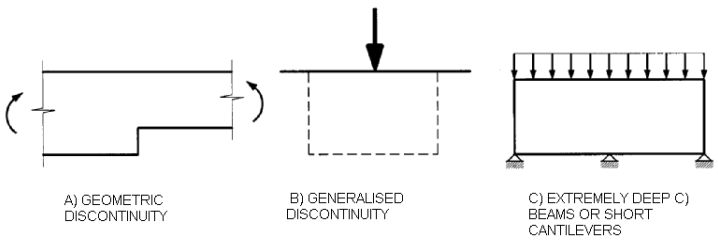

Figure 24.1.a, b and c

The following analysis methods are permitted to analyse areas of discontinuity

a) Linear analysis using elasticity theory
b) Strut-and-tie model
c) Non-linear analysis

24.1.1 Linear analysis by means of elasticity theory

The analysis shall lay down the field of main stresses and strains. The concentrations of stresses, as occur in corners or openings, may be redistributed taking into account the effects of cracking, reducing the rigidity in the corresponding areas.

Linear analysis is valid for both Service and Ultimate Limit State behaviours.

24.1.2 Strut-and-tie model

This method consists in substituting the structure, or the part of the structure forming the D-Region, with a structure with articulated bars, generally flat or in some cases spatial, representative of its behaviour. The compressed bars are called struts and represent the compression of the concrete. The tensioned bars are called ties and represent the tensile forces of the reinforcements.

The model must balance the external forces existing at the edge of the D-Region, in the case of an area within the structure, the acting external loads and the support reactions in the case of a structure with general discontinuity. This type of model, representing a perfect plastic behaviour, satisfies the requirements of the lower limit theorem of the plasticity theory, and, once the model has been decided upon, that of the unicity of the solution.

This model enables the checking of the conditions of the structure in the Ultimate Limit State for the various combinations of actions laid down in Article 13, if the conditions of the struts, ties and joints are verified in accordance with the criteria laid down in Article 40.

The checks relating to the Serviceability Limit State, in particular cracking, are not explicitly carried out, but may be considered to be satisfied if the model is directed in line with the results of a linear analysis and the conditions for the ties laid down in Article 40 are fulfilled.

24.1.3 Non-linear analysis

For a more refined analysis, the non-linear stress-strain relationships of the materials under multi-axial load states may be taken into account, using an appropriate numerical method. In this case, the analysis shall be satisfactory for both Ultimate and Serviceability Limit States.

Article 25. Analysis over time

25.1 General considerations

The analysis over time allows the structural effects of the creep, shrinkage and ageing of the concrete, and the relaxation of the prestressed steel to be obtained. These effects may be deferred deformations and displacements, as well as variations in the value or in the distribution of forces, reactions or stresses.

The analysis may be carried out by the general method laid down in Section 25.2 or the simplified methods based on the ageing factor or the like. In general, the linear viscoelasticity assumption may be applied, that is to say, proportionality between stresses and strains and overlapping over time, for compressive stresses which do not exceed 45% of the strength at the time the load is applied.

25.2 General method

For the step-by-step implementation of the general method, the following hypotheses apply:

a) The constitutive equation of concrete over time is:

$$\varepsilon_c(t) = \frac{\sigma_0}{E_c(t)} + \varphi(t,t_0)\frac{\sigma_0}{E_c(28)} + \sum_{i=1}^{n}\left(\frac{1}{E_c(t_i)} + \frac{\varphi(t,t_i)}{E_c(28)}\right)\Delta\sigma(t_i) + \varepsilon_r(t,t_s)$$

In this equation, the first term represents instantaneous deformation due to a stress applied in t_0. The second term represents the creep due to this stress. The third term represents the sum of the instantaneous deformations and creep due to the variation in stresses produced at an instant *ti.* Finally, the fourth term represents shrinkage strain.

b) For the various steels a linear behaviour under instantaneous loads shall be taken into account.

c) For prestressed steels with stresses greater than $0,5\ f_{pmax}$, relaxation and the fact that this takes place under variable deformation shall be taken into account.

d) It is considered that there is a perfect bond between the concrete and the bonding reinforcements and between the various concretes which may exist in the section.

e) In the case of linear elements, the flat deformation hypothesis for the sections is considered valid.

f) Equilibrium conditions must be verified at each section level.

g) Equilibrium must be verified at structure level taking support conditions into account.

CHAPTER 6

MATERIALS

In the area of application of this Code, products of construction that are manufactured or marketed legally in the Member States of the European Union and in the signing States of the Agreement on the European Economic Space will be able to be used, and as long as these products, complying the regulations of any Member State of the European Union, assure as for the safety and the use in which they are purposed an equivalent level at which it requires this Code..

This level of equivalence will be credited according to has been established in the article 4.2 or, in its case, in the article 16 of the Directive 89/106/EC of the Council, of 21 of December 1988, related to the approach of the legal, statutory and administrative arrangements of the Member States on the products of construction.

Dispositions in the previous paragraphs will be also applicable to the products of construction manufactured or marketed legally in a State that has an Agreement of customs association with the European Union, when that Agreement recognizes to those products the same treatment that to the ones manufactured or marketed in a Member State of the European Union. In these cases the level of equivalence will be confirmed through the application, to these effects, of the procedures established in the mentioned Directive.

.Article 26. Cements

The cement shall be able to provide the concrete with the characteristics set out for concrete in Article 31.

Within the scope of this Code, cements that satisfy the following requirements may be used:

- Are in conformity with the specific regulations in force,
- Satisfy the limitations on use set out in Table 26, and
- Belong to a strength class of 32.5 or above.
-

Table 26 Types of cement that can be used

Type of concrete	Type of cement
Mass concrete	Ordinary cements apart from types CEM II/A-Q, CEM II/B-Q, CEM II/A-W, CEM II/B-W, CEM II/A-T, CEM II/B-T and CEM III/C ESP VI-1 cements for special purposes
Reinforced concrete	Ordinary cements apart from types CEM II/A-Q, CEM II/B-Q, CEM II/A-W, CEM II/B-W, CEM II/A-T, CEM II/B-T, CEM III/C and CEM V/B
Pre-stressed concrete	Ordinary cements of types CEM I and CEM II/A-D, CEM II/A-V, CEM II/A-P and CEM II/A-M(V,P)

The permitted use requirements in dictated in table 26 for each type of concrete shall be understood to include white cements and cements with additional characteristics (i.e. sulphate-, water-, and seawater-resistant cements and those with low hydration heat) and be of the same types and in the same strength classes

The requirements in 35.4.2 shall be taken into consideration with any cement used as a constituent of an injected bonding product.

The use of calcium aluminate cement shall always be subject to special study; the reasons recommending its use shall also be provided and it shall satisfy the specifications contained in Appendix No. 3.

The provisions in 31.1 as regards total chlorine ion content shall be taken into consideration with every type of cement and the requirements for the fines content of concrete shall be satisfied whenever a limestone filler cement is used.

For the purpose of this Code, cements with a strength class of 32.5N shall be deemed to be slow-hardening cements; those of classes 32.5R and 42.5N and 42.5R, 52.5N and 52.5R shall be deemed to be rapid-hardening cements.

Article 27. Water

The water used to mix and cure the concrete in situ shall not contain any ingredients which in sufficient amounts could adversely affect the concrete's characteristics or the corrosion resistance of any reinforcements.

As a general rule, any water considered acceptable in practice may be used.

When there were not precedent information on a particular water or, if there is any uncertainty as to its quality, it shall be analysed and, unless it can be specially evidenced that it does not adversely affect the characteristics required of the concrete, it shall satisfy the following requirements:

Hydrogen exponent (pH) (UNE 7234)	≥ 5
Dissolved substances (UNE 7130)	≤ 15 grams per litre (15,000 p.p.m)
Sulphates, expressed as $SO_4^{=}$ (UNE 7131), except for SR cement in which this limit is increased to 5 grams per litre (5,000 p.p.m)	≤ 1 gram per litre (1,000 p.p.m)
Chloride ion, Cl^- (UNE 7178):	
a) For pre-stressed concrete	≤ 1 gram per litre (1,000 p.p.m)
b) For reinforced concrete or mass concrete containing crack-reducing reinforcements	≤ 3 grams per litre (3,000 p.p.m)
Carbon hydrates (UNE 7132)	0
Organic substances soluble in ether (UNE 7235)	≤ 15 grams per litre (15,000 p.p.m)

Sampling shall be taken in accordance with UNE 7236 and the analysis methods shall be in accordance with the standards indicated.

Seawater or similar saline water may be used for the mixing or curing of concretes that do not contain any reinforcements. Unless special studies are conducted, the use of this water for the mixing or curing of reinforced or pre-stressed concrete is expressly prohibited.

Recycled water from the washing tanks belonging to the concrete plant itself may be used, provided that the specifications set out above in this article are satisfied. The density value of the recycled water shall not exceed 1.3 g/cm^3 and the total density of water shall not exceed the heat of 1.1 g/cm^3.

The density of recycled water is directly related to the amount of fines it introduces into the concrete, in accordance with the following expression:

$$M = \left(\frac{1-d_a}{1-d_f}\right).d_f$$

In which:

M Mass of fines present in the water in g/cm^3.
d_a Density of the water in en g/cm^3.
d_f Density of the fines, in g/cm^3.

The provisions in 31.1 shall be taken into consideration with regard to the fines content introduced into the concrete. When calculating the fines content introduced by the recycled water, a d_f value of 2.1 g/cm^3, may be used in the absence of an experimental value obtained by determination in a Le Chatelier Flask, based on an oven-dried sample subsequently pulverised until it can pass through a 200 μm sieve.

The provisions in 31.1 shall be taken into consideration as regards chloride ion content.

Article 28. Aggregates

28.1 General

The characteristics of its constituent aggregates shall enable a concrete of suitable strength and durability and with the other characteristics set out in the Project Technical Specifications for the project to be obtained.

Concretes may be made using coarse aggregates (gravels) or fine aggregates (sand), in accordance with UNE-EN 12620, which have either been gravels from natural deposits (river aggregates) or obtained from crushed rocks, or comprise air-cooled foundry slag, according to UNE-EN 12620 or, generally any other type of aggregate whose satisfactory performance has been confirmed in practice and which can be duly evidenced.

The provisions in Appendix No. 15 shall be followed. if recycled aggregates are used. Lightweight aggregates shall comply with the provisions in Appendix 16 of this Code and, in particular, the provisions in UNE-EN 13055-1.

If foundry aggregates (for example: granulated iron blast furnace slag) are used, these shall first be checked to ensure that they are stable, i.e. that they do not contain any unstable silicates or unstable ferrous compounds.

Due to the risk they pose, only aggregates with a very low proportion of oxidisable sulphides may be used.

28.2 Designation of aggregates

For the purposes of this Code, aggregates shall be designated in accordance with the following format:

d/D - IL

In which:

d/D Particle size fraction of between a minimum size d, and a maximum size D, in mm.
IL Format: R ,river aggregate; T, crushed; M, mixture.

With preference the nature of the aggregate will be also included (C, lime; S, siliceous; G, granite; O, offite; B, basalt; D, dolomitic; Q, trachyte; I, phonolite; V, various; A, artificial; R, recycled), being the format:

d/D - IL – N

When specifying the concrete at the design stage, only the aggregate maximum size in mm needs to be established in accordance with 39.2 (where it is called TM) and whether recycled aggregate and its percentage specified, as necessary.

28.3 Maximum and minimum aggregate sizes

The maximum size D of a coarse or fine aggregate refers to the minimum opening in a UNE EN 933-2 sieve which satisfies the general requirements set out in table 28.3.a, as a function of the aggregate's size.

The minimum size d of a coarse or fine aggregate refers to the maximum opening in a UNE EN 933-2 sieve which satisfies the general requirements set out in table 28.3.a, as a function of the aggregate's type and size.

The minimum size d and the maximum size D of aggregates shall be specified using two sieves from the basic series, the basic series plus series 1, or the basic series plus series 2 in table 28.3.b. Series 1 sieves may not be combined with those of series 2.

The sizes of the aggregates shall not have a D/*d* less than 1.4.

Table 28.3.a General requirements for maximum D and minimum d sizes.

		Percentage passing through the sieve (by mass)				
		2 D	1.4D[a)]	D[b)]	d	d/2[a)]
Coarse aggregate	D > 11.2 and D/d > 2	100	98 to 100	90 to 99	0 to 15	0 to 5
	D≤11.2 or D/d≤2	100	98 to 100	85 to 99	0 to 20	0 to 5
Fine aggregate	D≤4 and d>0	100	95 to 100	85 to 99	0 to 20	-

a) Like 1.4D and d/2 sieves, they shall be taken from the series chosen or the following size of the nearest sieve in the series.

b) The percentage by mass which passes through sieve *D* may be more than 99%, but in these cases the supplier shall document and confirm the representative particle size grading, including sieves *D, d, d/2* and intermediate sieves between *d* and D in the basic series plus series 1, or from the basic series plus series 2. Sieves with a ratio of less than 1.4 times the following lower sieve may be excluded.

Table 28.3.b Sieves series for aggregates size specification

Basic Serie mm	Basic Serie+ Serie mm	Basic Serie + Serie 2 mm
0,063	0,063	0,063
0,125	0,125	0,125
0,250	0,250	0,250
0,500	0,500	0,500
1	1	1
2	2	2
4	4	4
-	5,6 (5)	-
-	-	6,3 (6)
8	8	8
-	-	10
-	11,2 (11)	-
-	-	12,5 (12)
-	-	14
16	16	16
-	-	20
-	22,4 (22)	-
31,5 (32)	31,5 (32)	31,5 (32)
-	-	40
-	45	-
63	63	63
125	125	125

NOTE – In order to simplify, rounded sizes in brackets can be used to describe the size of aggregates.

28.3.1 Restrictions on coarse aggregate sizes for the making of concrete.

The term gravel or total coarse aggregate is applied, when making concrete, to the mixture of the various fractions of coarse aggregate used; sand or total fine aggregate is the term applied to the mixture of the various fractions of fine aggregate used; and the term total aggregate (or, when there is no risk of confusion, simply aggregate), is the term applied to the aggregate which on its own or when mixed, has the correct proportions of sand and gravel to make a particular concrete.

The maximum size of the coarse aggregate used to make concrete shall be less than the following dimensions:

a) 0.8 times the free horizontal distance between sheaths or reinforcements, or between an edge of the member and a sheath or reinforcement forming an angle of more than 45º with the direction of concreting.
b) 1.25 times the distance between an edge of the member and a sheath or reinforcement forming an angle of not more than 45º with the concreting direction.
c) 0.25 times the minimum dimension of the member, apart from in the following cases:

- Top slab whose maximum aggregate size will be less than 0.4 times its minimum thickness.
- Very carefully constructed members (for example, elements precast in factory) and any elements whose formwork has a reduced wall effect (e.g. in the case of slabs with formwork only on one side), when it shall be less than 0.33 times the minimum thickness.

The aggregate for a particular application may comprise the combination of one or more particle size fractions. If the D/d ratio is 2 or less, the aggregate may be considered to constitute a singular particle size fraction.

When the concrete has to be poured between several layers of reinforcements, an aggregate size smaller than the size shown for the limits a) or b), if size is a determining factor, should be used.

28.4 Aggregate particle size grading

The particle size grading of aggregates, determined in accordance with standard UNE-EN 933-1, shall satisfy the requirement corresponding to their d/D size.

28.4.1 Particle size requirements for total fine aggregate

The amount of fines passing through a 0.063 UNE EN 933-1 sieve, expressed as a percentage of the weight of the total coarse aggregate sample or the total fine aggregate sample shall not exceed the values in table 28.4.1.a. If one of these values is exceeded, compliance with the specification for the limitation on the concrete's total fines content in 31.1, shall be checked

Table 28.4.1.a Maximum fines content of aggregates

AGGREGATE	MAXIMUM PERCENTAGE WHICH PASSES THROUGH A 0.063 mm SIEVE	TYPES OF AGGREGATE
Coarse	1.5%	- Any
Fine	6%	- Rounded aggregates - Crushed non-limestone building aggregates subjected to general exposure classes: IIIa, IIIb, IIIc, IV or any of the specific exposure classes: Qa, Qb, Qc, E, H and F (1)
	10%	- Crushed limestone building aggregates subjected to general exposure classes IIIa, IIIb, IIIc, IV or any of the specific exposure classes: Qa, Qb, Qc, E and F (1) - Crushed non-limestone building aggregates subjected to general exposure classes I, IIa or IIb but not subjected to any of the specific exposures classes: Qa, Qb, Qc, E, H and F (1)
	16%	- Crushed limestone building aggregates subjected to general exposure classes I, IIa or IIb but not subjected to any of the specific exposure classes: Qa, Qb, Qc, E, H and F (1)

(1) See tables 8.2.2 and 8.2.3.a.

28.4.2. Quality of aggregate fines

Apart from in the case indicated in the following paragraph, fines whose sand equivalent (SE_4) determined on a 0/4 fraction, in accordance with Appendix A of standard UNE EN 933-8, which is less than the following shall not be used:

a) 70, in the case of structures subjected to general exposure classes I, IIa or IIb but which are not subjected to any specific exposure class. See tables 8.2.2 and 8.2.3.a.
b) 75, in all other cases.

Notwithstanding the foregoing, sands from crushed limestones or dolomites (with these terms being understood to relate to carbonate sedimentary rocks that contain at least 70% calcite dolomite, or both) that do not satisfy the specification for sand equivalent shall be validly accepted if they satisfy the following requirements:

- in the case of structures subjected to general exposure classes I, IIa or IIb, but which are not subjected to any specific exposure class:

$$AM \leq 0{,}6.\frac{f}{100}$$

  Being AM the methylene blue (UNE EN 933-9) in grams of blue for every kilogram of the granulometric fraction 0/2 mm. and f the fines content of the 0/2 fraction.

- in other cases:

$$AM \leq 0{,}3.\frac{f}{100}$$

If, for the exposure class concerned, the methylene blue value is more than the limit value set out in the paragraph above and there is some uncertainty as to whether the fines contain any clay, its presence may be identified and qualitatively calculated in these fines, using the X-ray diffraction test. Fine aggregate may only be used if the clays are of the kaolinite or illite type and if the mechanical and pressurised water characteristics of the concretes made with this sand are at least the same as those of a concrete made using the same constituents but with sand without fines. the corresponding study shall be supplied with the evidencing documentation that shall always include a mineralogical analysis of the aggregate and, in particular, its clay content.

28.5 Form of coarse aggregate

The form of coarse aggregate shall be expressed using its flakiness index, with this being understood to be the percentage of aggregates by weight deemed to present flake shape in accordance with UNE EN 933-3, and which shall be less than 35.

28.6 Physical-mechanical requirements

The following limitations shall be satisfied:

- Resistance to wear of coarse aggregate determined by means of the Los Angeles test indicated in UNE EN 1097-2 <40
- Aggregate water absorption determined by means of the test method indicated in UNE EN 1097-6. < 5%

Coarse aggregates with an abrasion resistance of between 40 and 50 determined during a Los Angeles test (UNE-EN 1097-2) may be used to make mass or reinforced concrete with a specified strength characteristic not exceeding 30 N/mm^2, provided that previous experience

in their use has been gained, and specific experimental studies have been carried out confirming that they will not adversely affect the concrete's performance.

When a concrete is subject to an exposure class of H or F and its aggregates have a water absorption of more than 1%, these shall not, when subjected to five treatment cycles using magnesium sulphate solutions (test method UNE EN 1367-2), exhibit a weight loss exceeding 15% in the case of fine aggregates, or 18% in the case of coarse aggregates.

A summary of the quantitative limitations is shown in table 28.6.

Table 28.6 Physical-mechanical requirements

Characteristics of the aggregate	Maximum amount as a % of the total weight of the sample	
	Fine aggregate	Coarse aggregate
Water absorption % Determined in accordance with the test method indicated in UNE	5%	5%
Abrasion test of coarse aggregate determined in accordance with the test method indicated in UNE EN 1097-2	-	40 (*)
% weight loss after five magnesium sulphate cycles Determined in accordance with the test method indicated in UNE EN 1367-2 in the case of coarse aggregates and in UNE 83116 in the case of fine aggregates	-	18%

(*) 50, in the case indicated in the article.

28.7 Chemical requirements

This paragraph defines the minimum requirements which aggregates for concretes must satisfy. A summary of the quantitative limitations are shown in table 28.7.

28.7.1 Chlorides

The water soluble chloride ion (Cl^{--}) of coarse and fine aggregates for concrete, as determined in accordance with Article 7 of Standard EN 1744-1:1999, may not exceed 0.05% by mass of the aggregate when used in reinforced concrete, or mass concrete containing crack reduction reinforcements, and may not exceed 0.03% by mass of aggregate, when used in pre-stressed concrete, in accordance with the information indicated in Table 28.7.

The requirements in 31.1 shall be taken into account with regard to the total chloride ion, Cl^{--}, content of concretes.

28.7.2 Soluble sulphates

The acid-soluble sulphate content of coarse and fine aggregates, expressed in SO_3 and determined in accordance with Article 12 of Standard UNE-EN 1744-1, shall not exceed 0.8% by mass of the aggregate, as indicated in Table 28.7. this specification shall be 1% for air-cooled blast furnace slag.

28.7.3 Total sulphur compounds

Total sulphur compounds in coarse and fine aggregates, as determined in accordance with Article 11 of standard UNE-EN 1744-1, may not exceed 1% by mass of the total weight of the sample. This specification shall be 2% for air-cooled blast furnace slag,

If oxidisable iron sulphides are present in the form of pyrrhotite, sulphur content introduced by these, and expressed in S, shall be less than 0.1%.

28.7.4 Organic material compounds that alter the setting and hardening rates of concrete.

If, in accordance with paragraph 15.1 of UNE EN 1744-1, the presence of organic substances is detected, their effect on setting time and compression strength shall be determined in accordance with paragraph 15.3 of standard UNE-EN 1744-1. The mortar prepared with these aggregates shall ensure that:

a) The increase in the setting time of the mortar test samples is less than 120 minutes.
b) The reduction in the compression strength of the mortar test samples at 28 days is less than 20%.

Fine aggregates with a proportion of organic material which, when tested in accordance with the test method indicated in paragraph 15.1 of UNE-EN 1744-1, produces a darker colour than the reference standard substance, shall not be used. Similarly, the lightweight organic particle content floating in a liquid with a specific weight of 2 and determined in accordance with paragraph 14.2 of standard UNE-EN 1744-1 shall not be less than 0.5% in the case of fine aggregates, and 1% in the case of coarse aggregates. Coarse aggregates shall be crushed prior to testing until they have a particle size of less than 4 mm.

28.7.5 Volume stability of air-cooled blast furnace slag

Air-cooled blast furnace slag shall remain stable:

a) When the non-stable bicalcic silicate in its composition, as determined in accordance with the test described in paragraph 19.1 of UNE-EN 1744-1, is transformed.
b) When the iron and manganese sulphides in its composition, as determined in accordance with the test described in paragraph 19.2 of UNE-EN 1744-1, are hydrolysed.

Table 28.7 Chemical requirements

HARMFUL SUBSTANCES		Maximum amount as a % of total weight of the sample	
		Fine aggregates	Coarse aggregates
Material retained by the 0.063 UNE EN 933-2 sieve and which floats in a liquid with a specific weight of 2, as determined in accordance with the test method indicated in paragraph 14.2 of UNE EN 1744-1		0.50	1.00
Total sulphur compounds expressed as S and with reference to the dry aggregate, as determined in accordance with the test method indicated in paragraph 11 of UNE EN 1744-1		1.00	1.00(*)
Soluble sulphates in acids, expressed as SO_3 and with reference to the dry aggregate, as determined in accordance with the test method indicated in paragraph 12 of UNE EN 1744-1		0.80	0.80(**)
Chlorides expressed as Cl^- and with reference to the dry aggregate, as determined in accordance with the test method indicated in paragraph 7 of UNE EN 1744-1	Reinforced or mass concrete containing crack reduction reinforcements	0.05	0.05
	Prestressed concrete	0.03	0.03

(*) This value shall be 2% in the case of air-cooled blast furnace slag.
(**)This value shall be 1% in the case of air-cooled blast furnace slag.

28.7.6 Alkali-aggregate reactivity

Aggregates shall not exhibit any potential reactivity with the concrete's alkali compounds, whether these are contained in the cement or in other constituents.

A petrographic study shall first be carried out to verify this aspect, which will provide information concerning the type of reactivity that may be exhibited in each case.

If the petrographic study on the aggregate reveals the possibility that alkali-silica or alkali-silicate reactivity will be exhibited, the test described in UNE 146508 EX (accelerated cement test piece method) shall be carried out.

If the petrographic study on the aggregate reveals the possibility that alkaline-carbonate reactivity will occur, the test described in UNE 146507-2 EX shall be carried out. This test shall be carried out on a limestone-dolomitic fraction of natural or artificial mixtures of limestone and siliceous aggregates.

If the results of any of the tests required to determine reactivity reveal that the material is potentially reactive, the aggregate may not be used in conditions that encourage an alkaline-aggregate reaction, in accordance with paragraph 37.3.7. Aggregate automatically identified as being potentially reactive, can only be used if satisfactory results are obtained from the long-term reactivity tests on concrete cubes, according to standard UNE 146509 EX, and if the latter's expansion at the end of the test does not exceed 0.04%.

Article 29. Admixtures

29.1 General

For the purposes of this Code, admixtures shall be understood to mean those substances or products which, once incorporated into concrete prior to or during mixing or additional mixing in individual proportions not exceeding 5% of the weight of the cement, ensure the desired alteration, in the fresh or hardened state, in any of the concrete's characteristics, usual properties or performance.

Calcium chloride and generally any product, whose constituents include chlorides, sulphides, sulphites or other chemicals that could corrode reinforcements or make corrosion of reinforcements more likely, may not be used as admixtures in reinforced or prestressed concretes.

Elements prestressed by reinforcements anchored solely by means of bonding may not comprise air-entraining type admixtures.

However, plastifiers which have a secondary air-entraining effect may be used in continuously cast elements with pre-tensioned reinforcements provided that it is ensured that they do not perceptibly adversely affect the bond between the concrete and its reinforcement, or the latter's anchorage. The total amount of entrained air measured in accordance with UNE EN 12350-7 shall never exceed 6% by volume,.

The requirements in 31.1 shall be taken into consideration with regard to the chloride ion content.

29.2 Types of admixtures

For the purposes of this Code, five types of admixtures, as indicated in table 29.2 shall be considered.

Table 29.2 Types of admixtures

TYPE OF ADMIXTURE	MAIN FUNCTION
Water reducers/plastifiers	To reduce the water content of a concrete without modifying its workability or increase workability without modifying the water content.
High-range water reducers/ superplastifiers	To significantly reduce the water content of a concrete without modifying its workability or significantly increase workability without modifying the water content.
Accelerators and retarders	To modify a concrete's setting time.
Air-entraining agents	To produce a controlled volume of fine air bubbles which are uniformly distributed in the concrete in order to improve frost resistance.
Multi-functional	To modify more than one of the main functions defined above.

Admixtures of any of the five types described above shall satisfy UNE EN 934-2.

Designations of admixtures in accordance with UNE EN 934-2 shall be indicated in original documents, and include their manufacturers' certificates guaranteeing that the products satisfy the requirements set out in the aforementioned standard, their efficiency ranges (the proportions to be used) and their main functions from those indicated in the table above.

Unless otherwise indicated in advance by the Project Manager, the Supplier may use any of the admixtures contained in Table 29.2. The use of admixtures other than those indicated in this Article shall be subject to the prior approval of the Project Manager.

The introduction of admixtures into a concrete, once in situ but prior to its incorporation, shall require the authorization of the Project Management and the concrete Supplier to be notified.

Article 30. Additions

For the purposes of this Code, additions are those inorganic or pozzolanic materials, or materials with latent hydraulicity, which, when finely divided can be added to concrete in order to improve one of its characteristics or to endow it with special properties. This Code only covers fly ash and silica fumes added to concrete at the time of casting.

Fly ash is the solid residue collected by electrostatic precipitation or mechanical trapping of the dust accompanying the combustion gases of pulverised coal-fed thermoelectric plant burners.

Silica fumes are a by-product obtained during the reduction of high-purity quartz, with carbon in electric arc furnaces for the production of silicon and ferrosilicon.

Additions may be used as concrete constituents provided that evidence can be provided of their suitability for use, and that the desired effect can be achieved without negatively impact on the concrete's characteristics or posing a risk to the concrete's durability or the corrosion-resistance of its reinforcements.

A CEM I type cement must be used if the concrete contains additions of fly ash or silica fumes. In addition, if fly ash is added, the concrete shall be covered by a guarantee level that conforms to the provisions in the article 81 of this Code, for example, has an officially recognised quality mark.

Fly ash, representing up to 20% of the weight of the cement, and silica fumes representing up to 10% of the weight of the cement, may be used in prestressed concrete.

In specific applications involving high-strength concrete cast using CEM I type cement, fly ash and silica fumes may be added simultaneously, provided that the percentage of silica fumes does not exceed 10% and that the total percentage of additions (total fly ash and silica fumes) does not exceed 20% (of the weight of the cement in both cases). In this case, fly ash shall be merely deemed to improve the compactness and rheology of the concrete, and its contribution to the binder in the form of its efficiency coefficient *K* shall be disregarded.

The maximum amount of fly ash added in non prestressed elements in building structures may not exceed 35% of the weight of the cement; the maximum amount of silica fumes added may not exceed 10% of the weight of the cement. The minimum amount of cement is specified in 37.3.2.

The chloride ion content requirements in 31.1 shall be taken into consideration.

30.1 Requirements and tests for fly ash

Fly ash may not contain harmful elements in amounts that could affect the durability of the concrete or cause corrosion in its reinforcements. It shall also comply with the following specifications in accordance with UNE EN 450-2:

- Sulphur trioxide (SO_3), according to UNE EN 196-2 ≤ 3.0%
- Chlorides (Cl^-), according to UNE-EN 196-2 ≤ 0.10%
- Free calcium oxide, according to UNE EN 451-1 ≤ 1%
- Fire loss, according to UNE EN 196-2 ≤5.0% (Cathegory A in UNE-EN 450-1)
- Fineness, according to UNE EN 451-2 ≤40%
- Amount retained by a 45 µm sieve
- Activity index, according to UNE-EN 196-1
    - At 28 days ≥ 75%

- o At 90 days ≥ 85%
- Expansion using the needle method,
- according to UNE EN 196-3 < 10 mm

The specification for expansion shall only be taking into consideration if the free calcium oxide content exceeds 1% but does not exceed 2.5%

The results of the analysis and the preliminary tests shall be made available to the Project Management.

30.2 Requirements and tests for silica fumes

Silica fumes may not contain any harmful elements in amounts such that they could affect the durability of the concrete or cause its reinforcements to corrode. They shall also comply with the following specifications:

- Silicon dioxide (SiO_2), according to UNE EN 196-2 > 85%
- Chlorides (Cl^-) according to UNE 80217 < 0.10%
- Fire loss, according to UNE EN 196-2 < 5%
- Activity index according to UNE-EN 13263-1 > 100%

The results of the analysis and the preliminary tests shall be made available to the Project Management.

Article 31. Concretes

31.1 Composition

The composition chosen for the preparation of the mixtures intended for the construction of structures or structural elements shall be studied in advance in order to ensure that it is capable of providing concretes whose mechanical, rheological and durability characteristics satisfy the requirements of the project. These studies shall be carried out bearing in mind, wherever possible, the actual features of the structure (diameters, surface characteristics and layout of reinforcements, compacting method, dimensions of members, etc.)

Concrete constituents shall comply with the requirements in Articles 26, 27, 28, 29 and 30. In addition, the total chloride ion content introduced by constituents shall not exceed the following limits (see 37.4):

- Prestressed concrete structures	0.2% of the weight of the cement
- Reinforced concrete structures or mass concrete structures containing crack-reduction reinforcements	0.4% of the weight of the cement

The total amount of fines in the concrete, obtained by adding the coarse aggregate particle content and the fine aggregate particle content that can pass through a UNE 0.063 sieve, plus any limestone constituent in the cement, shall not be less than 175 kg/m^3. If recycled water according to Article 27 is used, this limit may be increased to 185 kg/m^3.

31.2 Quality requirements

The quality requirements or characteristics required for the concrete shall be specified in the Project Technical Specifications and reference to their compression strength, consistency, maximum aggregate size, the type of atmosphere to which they are to be exposed and, whenever necessary, reference to requirements relating to admixtures and additions, the

concrete's tensile strength, absorption, specific weight, compactness, wear, permeability, external appearance etc., shall be made.

These requirements shall be satisfied by all constituent product units with "product unit" being understood to be the amount of concrete cast at the same time. A product unit will normally be a batch, although for control purposes, it may instead be the amount of concrete made during a set period of time under the same basic conditions. The term "batch", as used in this Code, refers to a product unit.

In this Code, any measurable batch quality characteristic is expressed as the average value of a number of determinations (two or more) of the quality characteristic concerned, taken on parts or portions of the batch.

31.3 Mechanical characteristics

The mechanical characteristics of structural concretes shall satisfy the requirements set out in Article 39.

For the purposes of this Code, the compression strength of a concrete refers to the results obtained in the compression breaking strength tests at 28 days carried out on cylindrical test pieces 15 cm in diameter and 30 cm high, made, stored and tested in accordance with the provisions in this Code. The procedure set out in 86.3.2 shall be followed If cube test pieces are used for checking quality,.

The formulae contained in this Code relate to tests carried out on cylindrical test pieces; similarly, and unless otherwise expressly indicated, requirements indicated in this Code refer to cylindrical test pieces.

The compression strength of structural concrete that is not going to be loaded during the first three months following its incorporation may be tested at 90 days.

Project Technical Specifications may require the concrete's tensile and flexural strength to be tested on some structures or parts of structures using standardised tests.

In this Code, high strength concretes refer to concretes with a characteristic compressive design strength f_{ck} greater than 50 N/mm^2.

For the purposes of this Code, rapid hardening concretes are concretes: made using cement with a strength class of 42.5R, 52.5 or 52.,5R provided that their water/cement ratio is no more 0.60; made using cement with a strength class of 32.5R or 42.5, provided that their water/cement ratio is no more than 0.50; to which an accelerator has been added. All other concretes shall be deemed to be normal hardening concretes.

31.4 Minimum strength value

The design strengths, f_{ck} (see 39.1) of structural concretes, shall not be less than 20 N/mm^2 in the case of mass concretes, or less than 25 N/mm^2 in the case of reinforced or prestressed concretes.

Where the design so specifies, in accordance with 86.5.6, the strength of mass concrete or reinforced concrete structures for minor engineering structures or in one- or two-storey residential buildings with spans of less than 6.0 metres, and in elements of residential structures of up to four storeys that are subject to bending, also with spans of less than 6.0 metres, may be indirectly checked and a compression design strength of f_{cd} not exceeding 10 N/mm^2 (see 39.4) shall be adopted. When concrete strength is indirectly checked in these cases, the minimum amount of cement in the mix shall also satisfy the requirements in table 37.3.2.a.

Non-structural concretes (i.e. blinding concretes, fill concretes, kerbs and pavements) do not have to satisfy this minimum strength value, do not need to be identified using the standard structural concrete format (defined in 39.2), and shall not be subject to this article, since they have their own requirements set out in Annex No. 18 of this Code.

31.5 Concrete workability

A concrete's workability shall be sufficient to ensure, if the methods set out for its incorporation and compacting are used, that it surrounds the reinforcement without any continuity defects and fully fills formwork without leaving any cavities. The workability of a concrete shall be calculated by determining its consistency.

Concrete consistency is measured on the basis of its slump in an Abrams cone, in accordance with UNE-EN 12350-2, expressed as a whole number of centimetres.

It is generally recommended that the slump of structural concretes in an Abrams cone is at least 6 centimetres.

The various consistencies and the limits for the corresponding slump values in the Abrams cone shall be as follows:

Type of consistency	Slump in cm
Dry (S)	0 - 2
Plastic (P)	3 - 5
Soft (B)	6 - 9
Fluid (F)	10 - 15
Liquid (L)	16-- 20

Except for specific applications where required, consistency dry and plastic will be avoided. Liquid consistency can be used only if it is got by means of superplastifiers.

The concrete consistency used shall be as specified in the Project Technical Specifications and defined by their type or numerical value of slump in cm.

The provisions in Annex No. 17 of this Code shall be satisfied by self-compacting concretes,.

Article 32. Steels for passive reinforcements

32.1 General

For the purposes of this Code, the following steel products may be used to make passive reinforcements:

- Ribbed weldable straight steel bars and weldable ribbed steel supplied in coils
- Ribbed or indented weldable steel wires
- Plain weldable steel wires.

Plain wires may only be used as connection elements for basic electro-welded lattice reinforcements.

Steel products for passive reinforcements shall not exhibit any surface defects or cracks.

Nominal cross-sections and nominal masses per metre shall be as set out in Table 6 of UNE EN 10080. Equivalent cross-sections shall not be less than 95.5 percent of nominal cross-sections.

The nominal diameter of a steel product refers to the conventional figure that defines its circle and on which its tolerances are established. The area of the aforementioned circle is the nominal cross-section.

The equivalent cross-section of a steel product, expressed in square centimetres, refers to the division of its weight in newtons by 0.077 (7.85 if its weight is expressed in grams) times its length in centimetres. The diameter of the circle whose area is the same as its equivalent cross-section is called the equivalent diameter. Determination of the equivalent cross-section shall be undertaken after carefully cleaning the steel product to remove any mill scale and loose oxide.

For the purposes of this Code, the yield stress f_y, of a passive reinforcement steel is the stress sufficient to produce a permanent deformation of 0.2 percent.

The steel manufacturing method shall be at the manufacturer's discretion.

32.2 Bars and coils of weldable ribbed steel

For the purposes of this Code, only ribbed weldable steel bars and ribbed weldable steel supplied in coils conforming to UNE EN 10080 may be used.

Possible nominal diameters of ribbed bars shall be as defined in the following series, in accordance with Table 6 of UNE EN 10080:

6 - 8 - 10 - 12 - 14 - 16 - 20 - 25 - 32 and 40 mm.

Apart from in the case of electro-welded mesh fabrics or basic lattice reinforcements, diameters of less than 6 mm shall be avoided wherever any welding technique, either resistant or non-resistant, is used in the making or installation of passive reinforcements.

The types of ribbed steel are defined for the purposes of this Code in table 32.2.a:

Table 32.2.a Types of ribbed steel

Type of steel		Weldable steel		Weldable steel with special ductility characteristics	
Designation		B 400 S	B 500 S	B 400 SD	B 400 SD
Yield strength, f_y (N/mm^2)(1)		≥400	≥500	≥400	≥500
Ultimate tensile stress, f_s (N/mm^2)(1)		≥440	≥550	≥480	≥575
Elongation to failure, $\varepsilon_{u,5}$ (%)		≥14	≥12	≥20	≥16
Total elongation at maximum load, $\varepsilon_{máx}$ (%)	Steel supplied as bars	≥5.0	≥5.0	≥7.5	≥7.5
	Steel supplied as rolls (3)	≥7.5	≥7.5	≥ 10.0	≥10.0
f_s/f_y ratio (2)		≥1.05	≥ 1.05	$1,20 \le f_s/f_y \le 1,35$	$1,15 \le f_s/f_y \le 1,35$
$f_{y\ real}/f_y$ nominal ratio		-	-	≤1.20	≤1.25

(1) Nominal cross-sections shall be used when calculating unit values.

(2) Permitted ratio between Ultimate tensile stress and the yield strength obtained at the end of each test.

(3) Samples of ribbed steels supplied in rolls shall be prepared prior to testing, in accordance with the provisions in Annex 23. Considering the uncertainty of this method can be accepted steels with characteristic values of $\varepsilon_{máx}$,0.5% below to the corresponding in the table for those cases.

The minimum mechanical characteristics guaranteed by the Supplier shall be in accordance with the requirements in Table 32.2.a. In addition, bars shall be suitable for bending and unbending, as confirmed by the absence of cracks perceptible to the naked eye when undertaking the test according to UNE-EN ISO 15630-12, and using the mandrels in Table 32.2.b.

Table 32.2.b Diameter of mandrels

Bending-unbending a = 90. β = 20.		
d ≤ 16	16 < d ≤ 25	d > 25
5 d	8 d	10 d

In which:

d Nominal bar diameter in mm
α Bending angle
β Unbending angle

Instead of the bending-unbending suitability test the simple bending test, according to UNE-EN ISO 15630-1 may be carried out using the mandrels specified in table 32.2.c.

Table 32.2.c Diameter of mandrels

Simple bending a= 180.	
d ≤ 16	d > 16
3 d	6 d

in which:

d Nominal bar diameter in mm
α Bending angle

Wieldable steels with special ductility characteristics (B400SD and B500SD) shall satisfy the requirements in table 32.2.c with regard to the fatigue test in accordance with UNE-EN ISO 15630-1, and the requirements in table 32.2.e relating to the alternating deformation test, according to UNE 36065 EX.

Table 32.2.d Fatigue test specification

Characteristic	B400SD	B500SD
Number of cycles which the test piece must withstand without breaking.	≥ 2 millions	
Maximum tensile stress, σ_{max}= 0.6 fy nominal (N/mm^2)	240	300
Amplitude, $2\sigma_a = \sigma_{máx} - \sigma_{mín}$ (N/mm^2)	150	
Frequency, f (Hz)	$1 \leq f \leq 200$	
Free length between jaws, (mm)	≥14d ≥ 140 mm	

In which:

d Nominal bar diameter in mm

Table 32.2.e Alternating deformation test specification

Nominal diameter (mm)	Free length between jaws	Maximum deformation in tensile and compression (%)	Number of complete symmetrical hysteresis cycles	Frequency *f* (Hz)
$d \leq 16$	5 d	± 4	3	$1 \leq f \leq 3$
$16 < d \leq 25$	10 d	± 2.5		
$d > 25$	15 d	±1.5		

In which:

d Nominal bar diameter in mm

The bending characteristics of the steel shall be verified using the general method in Appendix C of UNE EN 10080 or alternatively, using the projections geometry in accordance with the provisions in the general method defined in paragraph 7.4 of UNE EN 10080. The following requirements shall be simultaneously satisfied if verification is undertaken using the beam test:

- Diameters of less than 8 mm:

$$\tau_{bm} \geq 6.88$$

$$\tau_{bu} \geq 11.22$$

- Diameters of between 8 mm and 32 mm, inclusive:

$$\tau_{bm} > 7.84 - 0.12\,\phi$$

$$\tau_{bu} \geq 12.74 - 0.19\phi$$

- Diameters of more than 32 mm:

$$\tau_{bm} > 4.00$$

$$\tau_{bu} \geq 6.66$$

in which τ_{bm} is expressed in N/mm^2 and φ in mm.

Until the CE mark comes into force, when verifying bonding characteristics using beam tests, steels shall be individually certified by an official or accredited laboratory in accordance with UNE-EN ISO 17025 for the test concerned. The certificate shall strictly contain, in addition to the commercial mark of the steel, its permitted variation limits for the geometric characteristics of the ribs if the steel is supplied in straight bars and with an express indication, if supplied in rolls, that the rib height is greater than the figure indicated in the certificate plus 0.1 mm in the case of diameters of more than 20 mm and plus 0.05 mm more in other cases. In addition, the other information referred to in Appendix C of UNE EN 10080 shall be included.

When bending is verified using the general method, the projected area of the ribs *(f_R)* or, as appropriate, the indentations *(f_P)* shall satisfy the requirements in table 32.2.2.f.

Table 32.2.2.f Projected area of ribs or indentations

d mm)	≤ 6	8	10	12 - 16	20-40
f_R *or* f_P *(mm),* in bars	≥ 0.039	≥ 0.045	≥ 0.052	≥ 0.056	≥ 0.056
f_R *or* f_P *(mm),* in rolls	≥ 0.045	≥ 0.051	≥ 0.058	≥ 0.062	≥ 0.064

The steel's chemical composition, as a percentage by mass, shall satisfy the limits set out in table 32.2.2.h, for weldability and durability reasons.

Table 32.2 2.h Chemical composition (maximum percentages, by mass)

Analysis	C (1)	S	P	N (2)	Cu	Ceq
On cast	0.22	0.050	0.050	0.012	0.80	0.50
On product	0.24	0.055	0.055	0.014	0.85	0.52

(1) The limit value of C will be increased by 0.03%, if C_{eq} is reduced by 0.02%.

(2) Greater percentages of N are permitted if there is a sufficient amount of N- fixing elements present

The equivalent carbon value, C_{eq}, in the table above, shall be calculated using:

$$C_{eq} = C + \frac{Mn}{6} + \frac{Cr + Mo + V}{5} + \frac{Ni + Cu}{15}$$

in which the symbols of the chemical elements indicate their content, either as a percentage or by mass.

32.3 Ribbed wires and plain wires

Ribbed wires are wires that satisfy the requirements set out for the manufacture of electro-welded meshes or basic electro-welded lattice reinforcements, in accordance with the provisions in UNE EN 10080.

Plain wires refers to wires that satisfy the requirements set out for the manufacture of connecting elements in basic electro-welded lattice reinforcements in accordance with the provisions in UNE EN 10080.

The nominal diameters of wires shall be as defined in table 6 of UNE EN 10080 and, hence, shall satisfy the following series:

4 - 4.5 - 5 - 5.5 - 6 - 6.5 - 7 - 7.5 - 8 - 8.5 - 9 - 9.5 - 10 - 11 - 12 - 14 and 16 mm.

Diameters 4 and 4.5 mm may be used in the cases indicated in 59.2.3. For the purposes of this Code, the following specification is for the type of steel to be used in ribbed and plain wires:

Table 32.3 Type of steel for wires

Designation	Tensile test (1)				Bending-unbending test according to UNE-EN ISO 15630-1 α = 90. (5) β = 20. (6) Mandrel diameter D'
	Yield strength f_y,(N/mm^2) **(2)**	Ultimate tensile stress, fs (N/mm^2) **(2)**	Elongation to failure based on 5 diameters A (%)	Ratio fs/fy	
B 500 T	500	550	8 (3)	1,03 (4)	5 d (7)

(1) Lower characteristic values guaranteed.

(2) For determining the yield strength and ultimate tensile stress the nominal value of the area of the cross-section shall be used as the divider.

(3) The following shall also be satisfied:

$$A\% \geq 20-0.02f_{yi}$$

In which:

A Elongation to failure

f_{yi} Yield stress measured in each test.

(4) In addition, the following shall be satisfied:

$$\frac{f_{si}}{f_{yi}} \geq 1,05 - 0,1\left(\frac{f_{yi}}{f_{yk}} - 1\right)$$

in which:

f_{yi} Yield stress measured in each test.

f_{si} Ultimate tensile stress obtained in each test.

f_{yk} Guaranteed yield strength.

(5) a Bending angle.

(6) β Unbending angle.

(7) d Nominal diameter of the wire.

As an alternative to the bending-unbending capability test, the single bend test may be used according to UNE-EN ISO 15630-1, for which a mandrel of diameter 3d shall be used, with d being the diameter of the wire in mm.

In addition, the wire shall satisfy the same chemical composition characteristics as those defined in paragraph 32.2 for ribbed weldable straight bars and ribbed weldable steel supplied in coils . Ribbed bars shall also satisfy the bond characteristics set out in the aforementioned paragraph.

Article 33. Passive reinforcements

Passive reinforcements refers to the assembly of standardised or fabricated reinforcements and constituent reinforced metal elements in a form or shuttering,, which, when suitably overlapped and covered perform a structural function.

The mechanical, chemical and bond characteristics of passive reinforcements shall be the same as those of standardised reinforcements or, as appropriate, as their constituent reinforced elements.

The nominal diameters and shapes of reinforcements shall be as defined in the corresponding design document.

For the purposes of this Code, the types of reinforcement are defined in accordance with the specifications in table 33.

Table 33 Types of steels and standardised reinforcements to be used for passive reinforcements

Type of reinforcement	Reinforcement made from low ductility steel		Reinforcement made form highly ductile weldable steel		Reinforcement made from weldable steel and special ductility characteristics	
Designation	AP400 T	AP500 T	AP400 S	AP400 S	AP400 SD	AP400 SD
Total elongation at maximum load, ε_{max} (%) (**)	-	-	≥ 5.0	≥ 5.0	≥ 7.5	≥ 7.5
Type of steel	-	-	B 400 S B 400SD (*)	B 500 S B 500SD (*)	B 400 SD	B 500 SD
Type of electro-welded mesh, as appropriate, according to 33.1.1	ME 400 T	ME 500 T	ME400S ME 400SD	ME500S ME 400 SD	ME400SD	ME500SD
Type of lattice electro-welded basic reinforcement, as appropriate 33.1.2	AB 400T	AB 500 T	AB400S AB 400 SD	AB500S AB 500 SD	AB400SD	AB500SD

(*) The margin of transformation of the steel in assemblies of AP400S or AP500S reinforced metal elements made from weldable steel with special ductility characteristics, in accordance with paragraph 69.3.2, refers to the specifications set out for that steel in Table 32.2.a.
(**) The specifications for $\varepsilon_{máx}$ of the table correspond with the classes of reinforcement B and C defined in the EN 1992-1-1. Considering 32.2 for steels in roll, can be accepted values of $\varepsilon_{máx}$ being lowers in a 0.5%.

Structures submitted to seismic loads, in accordance with the provisions in the earthquake resistance regulation in force, shall comprise passive reinforcements in the form of weldable ribbed bars made from steel with special characteristics (SD).

33.1 Standardised reinforcements

Standardised reinforcement refers to electro-welded mesh and basic electro-welded lattice work in accordance with UNE-EN 10.080 that satisfy the specifications in 33.2.1 and 33.2.2, respectively.

33.1.1 Electro-welded mesh fabrics

Within the scope of this Code, electro-welded mesh fabrics refers to the reinforcement formed by the arrangement of ribbed bars or wires, both longitudinal and transversal, with the same or differing nominal diameters, that intersect one another perpendicularly, and whose

contact points are joined by electric-welded in series at an off-site industrial plant, and which conforms to the provisions in UNE-EN 10080.

Electro-welded mesh shall be produced from ribbed bars or wires, which shall not be combined with one another, and which shall satisfy the requirements set out for them in Article 31 of this Code.

The designation of electro-welded mesh shall conform to the provision in paragraph 5.2 of UNE EN 10080.

For the purposes of this Code, the types of electro-welded mesh included in table 33.2.1, are defined as a function of their constituent steel.

Table 33.2.1 Types of electro-welded mesh

Types of electro-welded mesh	ME 500 SD	ME 400SD	ME 500 S	ME 500 S	ME 500 T	ME 400 T
Type of steel	B500SD, according to 32.2	B400SD, according to 32.2	B500S, according to 32.2	B400S, according to 32.2	B500T, according to 32.3	B400T, according to 32.3

Depending on the type of electro-welded mesh concerned, elements shall satisfy the applicable specifications in accordance with the provisions in UNE-EN 10.080 and in the corresponding paragraphs of Article 32.. Electro-welded mesh shall also satisfy the separation load requirement (F_s) for welded joints,

$$Fs_{min} = 0.25.\ f_y.A_n$$

In which f_y is the specified yield stress, and A_n is the nominal cross-section of the larger of the joining elements or of one of the paired elements, depending on whether the mesh is of the single or double type, respectively.

33.1.2 Basic electro-welded lattice

Within the scope of this Code, basic electro-welded lattice refers to the spatial structure formed by an upper rod and one or more lower rods, all in ribbed steel, and a set of transverse elements, either plain or ribbed, continuous or discontinuous, electrically welded to the longitudinal rods. They shall be produced in series at an off-site industrial plant, and conform to the provisions in UNE-EN 10080.

Longitudinal rods shall be made from ribbed bars in accordance with 32.2 or ribbed wires, in accordance with 32.3, whereas the connecting transverse elements shall be made from plain or ribbed wires, in accordance with 32.3

The designations of electro-welded basic lattice framework shall conform to the provisions in paragraph 5.3 of UNE EN 10080.

For the purposes of this Code, the types of basic electro-welded lattice are defined in table 33.2.2.

Table 33.2.2 Types of basic electro-welded lattice reinforcement

Types of basic electro-welded lattice reinforcement	AB 500 SD	AB 400SD	AB 500 S	AB 500 S	AB 500 T	AB 500 T
Type of steel in longitudinal rods	B500SD, according to 32.2	B400SD, according to 32.2	B500S, according to 32.2	B400S, according to 32.2	B500T, according to 32.3	B400T, according to 32.3

In addition, the separation load (F_w) for welded joints, tested in accordance with UNE-EN ISO 15630-2, shall be greater than:

$$Fw_{min} = 0.25.f_{yL}.A_{nL}$$

$$Fw_{min} = 0.60.\ fy_D.A_{nD}$$

In which:

f_{yL} Value of the yield stress specified for the longitudinal rods.
A_{nL} Cross-section of the longitudinal rod.
f_{yD} Value of the yield stress specified for the diagonals.
A_{nD} Nominal cross-section of the diagonals.

33.2 Assembled Reinforcement

Within the scope of this Code, an assembled reinforcement element is defined as:

- Finished reinforcement, each of the formats or configurations of elements after they have been straightened, cut or bent, as appropriate, and made from ribbed steel in accordance with paragraph 32.2 or, as appropriate, from electro-welded mesh according to 33.1.1.
- Assembled reinforcement, the product resulting from reinforcing fabricated reinforcements using wire or non-resistant welding for their attachment.

The specifications relating to the fabrication, reinforcement and installation processes for reinforcements are contained in Article 69 of this Code.

Article 34. Steels for active reinforcements

34.1 General

For the purposes of this Code, the following steel products are specified for active reinforcements:

- Wire: product with solid cross section, plain or ribbed, normally supplied in coils. Table 34.1 indicates the normal dimensions of the indentations of the wires (figure 34.1) according to standard UNE 36094.
- Bar: product with solid cross-section supplied solely as rectilinear elements.
- Strand: Product formed by a number of spiral-wound wires with the same pitch and twisted in the same direction around an ideal shared core (see UNE 36094). Strands may comprise various numbers of wires (2, 3 or 7) with the same nominal diameter and spiral-wound around an ideal shared core.

Strands may be plain or ribbed. Plain strands are made using plain wire. Ribbed strands are made using ribbed wires. The central wire may be plain in the latter case. Ribbed wires improve bonding with the concrete. Table 3.1 shows the nominal dimensions of the indentations of wires for strands according to standard UNE 36094.

The set of parallel prestressing reinforcements housed in a single tube are termed a tendon, and considered as a single reinforcement in calculations. Each of the individual reinforcements in pre-tensioning reinforcements is called a tendon.

Steel products for active reinforcements shall be free from surface defects produced at any stage in their manufacture and which would render them not fit for purpose. oxidised wires and strands are not permitted unless they receive a thin non-bonding surface oxide coating.

Table 34.1.a Nominal dimensions of wire indentations

Nominal diameter of the wire in mm	Normal dimensions of indentations			
	Depth (a) in hundredths of a mm		Length (l) mm	Separation (p) mm
	Type 1	Type 2		
3	2 a 6		3.5 ± 0.5	5.5 ± 0.5
4	3 to 7	5 to 9		
5	4 to 8	6 to 10		
6	5 to 10	8 to 13	5.0 ± 0.5	8.0 ± 0.5
≥7	6 to 12	10 to 20		

Table 34.1.b Nominal dimensions of wire indentations for strands

Depth (a) in hundredths of a mm	Length (l) mm	Separation (p) mm
2 to 12	3.5 ± 0.5	5.5 ± 0.5

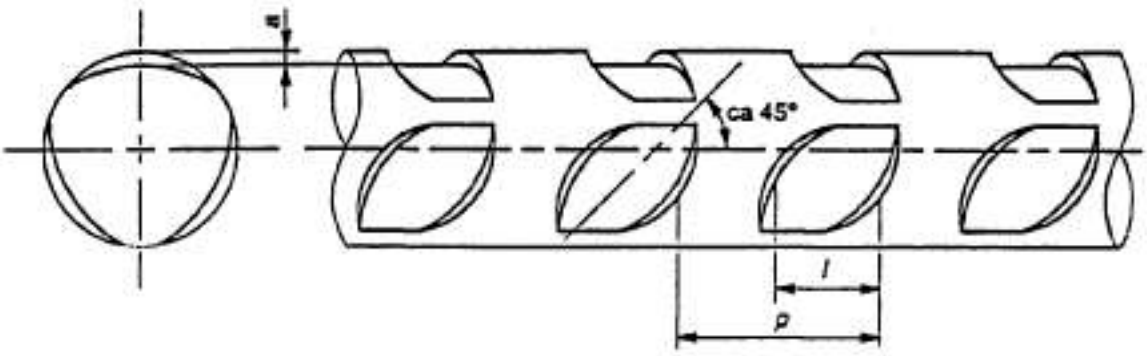

Figure 34.1 Indentations

34.2 Mechanical characteristics

For the purposes of this Code, the following fundamental characteristics are used to define the performance of active reinforcement steel:

a) Maximum unit tensile strength *(f_{max})*
b) Yield strength *(f_y)*
c) Elongation at maximum load *($\varepsilon_{máx}$)*
d) Modulus of elasticity *(E_s)*

e) Coefficient of reduction of area (η) expressed as a percentage
f) Suitability for alternate bending (only for wires)
g) Relaxation
h) Fatigue resistance
i) Susceptibility to corrosion when stressed
j) Skewed tensile strength (only for strands with a nominal dimension of 13 mm or more)

Manufacturers shall guarantee at least the characteristics indicated in a), b), c), d), g), h) and i).

34.3 Prestressing wires

For the purpose of this Code, prestressing wires refer to wires that satisfy the requirements set out in UNE 36094, or as appropriate, in the corresponding harmonised product standard. Their mechanical characteristics obtained from the tensile test carried out according to UNE-EN ISO 15630-3 shall satisfy the following requirements:

- Maximum unit load shall not be less than the values shown in table 34.3.a

Table 34.3.a Types of prestressing wires

Designation	Series of nominal diameters in mm	Maximum unit load f_{max} in N/mm^2 not less than:
Y 1570 C	9.4 - 10.0	1,570
Y 1670 C	7.0 - 7.5 - 8.0	1,670
Y 1770 C	3.0 - 4.0 - 5.0 - 6.0	1,770
Y 1860 C	4.0 - 5.0	1,860

- The yield strength f_y shall be between 0.85 and 0.95 of the maximum unit load f_{max}. This ratio shall be satisfied not only by the minimum guaranteed values but also by the values for each of the wires tested.
- Elongation at maximum load measured on a longitudinal base of 200 mm or more shall not be less than 3.5%. In the case of wires intended for the manufacture of tubes, this elongation shall be 5% or more.
- The reduction in area at break shall be at least 25% in the case of plain wires and visible to the naked eye in the case of ribbed wires with indentations.
- Their modulus of elasticity shall be the value guaranteed by the manufacturer, with a ±7% tolerance.

The loss of tensile strength in wires with a diameter of 5 mm or more, or of equivalent cross-section, following bending/unbending carried out in accordance with UNE-EN ISO 15630-3 shall not be more than 5%.

The minimum number of bending-unbending cycles which the wire can withstand during the alternating bending test carried out in accordance with UNE-EN ISO 15630-3 shall not be less than:

Steel product for active reinforcement	Number of bending and unbending operations
Plain wires	4
Deformed wires	3
Wires intended for hydraulic structures or to be submitted to a corrosive atmosphere	7

Relaxation at 1,000 hours at a temperature of $20^o \pm 1^oC$, and for an initial tensile stress of 70% of the actual maximum unit load shall not exceed 2.5% (hardened wires which have received a stabilisation treatment).

The average value of the residual tensile stresses shall be less than 50 N/mm^2, in order to ensure suitable performance when subjected to stress corrosion.

The values of the nominal diameter in mm of wires shall satisfy the following series:

3 – 4 – 5 – 6 – 7 – 7.5 – 8 – 9.4 – 10

The geometric and weight characteristics of prestressing wires and their corresponding tolerances shall satisfy the requirements in UNE 36094.

34.4 Prestressing bars

The mechanical characteristics of prestressing bars, determined from the tensile test carried out in accordance with UNE-EN ISO 15630-3 shall satisfy the following requirements:

- Maximum unit load $f_{máx}$ shall not be less than 980 N/mm^2.
- The yield strength f_y shall be between 75 and 90% of the maximum unit load f_{max}. This ratio shall be satisfied not only by the minimum guaranteed values but also by each of the bars tested.
- Elongation at maximum load measured on a longitudinal base of 200 mm or more shall not be less than 3.5%.
- Their modulus of elasticity shall be the value guaranteed by the manufacturer, with a ± 7% tolerance.

Bars shall withstand the bending test specified in UNE-EN ISO 15630-3, without breaking or cracking.

Relaxation at 1,000 hours at a temperature of 20. ± 1^oC and for an initial tensile stress of 70% of the guaranteed maximum unit load shall not exceed 3%. Tests shall be carried out in accordance with UNE-EN ISO 15630-3.

34.5 Pre-tensioning strands

For the purpose of this Code, prestressing strands refer to those that satisfy the requirements set out in UNE 36094, or as appropriate, in the corresponding harmonised product standard. Their mechanical characteristics obtained from the tensile stress carried out at UNE-EN ISO 15630-3 shall satisfy the following requirements:

- Maximum unit load f_{max} shall not be less than the values shown in table 34.5a in the case of strands of 2 or 3 wires, and 33.5.b. in the case of strands of 7 wires.

Table 34.5.a Strands of 2 or 3 wires

Designation	Series of nominal diameters in mm	Maximum unit load f_{max} in N/mm^2 not less than :
Y 1770 S2	5.6 - 6.0	1,770
Y 1860 S3	6.5 - 6.8 - 7.5	1,860
Y 1960 S3	5.2	1,960
Y 2060 S3	5.2	2,060

Table 34.5.B Strands of 7 wires

Designation	Series of nominal diameters in mm	Maximum unit load f_{max} in N/mm^2 not less than :
Y 1770 S7	16.0	1,770
Y 1860 S7	9.3 – 13.0 – 15.2 – 16.0	1,860

- The yield strenth f_y shall be between 0.88 and 0.95 of the maximum unit load f_{max}. This limitation shall be satisfied not by only the minimum guaranteed values but also by each of the elements tested.
- Elongation at maximum load measured on a longitudinal base of 500 mm or more shall not be less than 3.5%.
- The reduction in area at break shall be visible to the naked eye.
- Their modulus of elasticity shall be the value guaranteed by the manufacturer, with a ±7% tolerance.
- Relaxation at 1,000 hours at a temperature of 20° ± 1°C, and for an initial tensile stress of 70% of the actual maximum unit load shall not exceed 2.5%
- The average value of the residual tensile stresses for the central wire shall be less than 50 N/mm² in order to ensure suitable performance when subjected to stress corrosion.

The value of the deviation coefficient *D* in the skewed tensile test according to UNE-EN ISO 15630-3 shall not exceed 28, in the case of strands with a normal diameter of 13 mm or more.

The geometric and weight characteristics and the corresponding tolerances of the strands shall satisfy the requirements in UNE 36094-3.

The wires used in the strand shall withstand the number of bending and unbending operations indicated in 34.3.

Article 35. Active Reinforcements

Active reinforcements refer to the configurations of high strength steel elements by means of which the structure is prestressed. These may comprise wires, bars or strands that conform to Article 34 of this Code.

35.1 Prestressing systems

Only prestressing systems which satisfy the requirements set out in the European Technical Suitability Document produced specifically for each system by an authorised body within the scope of Directive 89/106/EEC and in accordance with the ETAG 013 Guide produced by the

European Organisation for Technical Approvals (EOTA) may be used for post-tensioned active reinforcements.

All the equipment used in tensioning operations shall be appropriate for its purpose and hence:

- Each type of anchorage will require tensioning equipment to be used which shall generally be the equipment recommended by the system's supplier.
- Tensioning equipment shall be in good condition so that it operates properly, provides continuous tensioning and maintains the pressure without any loss or posing any risk.
- The measurement equipment incorporated in the tensioning equipment shall enable the corresponding readings to be made to an accuracy of 2%. They shall be verified prior to use and subsequently whenever necessary, but at least once a year.

The corrosion protection of prestressing system components shall be guaranteed during their manufacture, transport and storage, when being incorporated and throughout the service life of the structure.

35.2 Anchorage and splicing devices for post-tensioning reinforcements.

35.2.1 Characteristics of anchorages

Anchorages shall be capable of effectively retaining the tendons, resisting their unit ultimate load and transmitting to the concrete a load which is at least the same as the maximum load which the corresponding tendon can introduce. The following requirements shall therefore be satisfied:

a) The coefficient of efficiency of an anchored ribbed or plain tendon shall be at least 0.95. In addition to their efficiency, the criteria for the non-reduction in the reinforcement's strength and ductility shall be verified in accordance with the ETAG 013 Guide, produced by the European Organisation for Technical Approvals (EOTA).
b) Slippage between anchorage and reinforcement shall cease when the maximum tensioning force is reached (80% of the tendon's breaking load). Therefore:

The wedge anchoring system shall be capable of retaining the tendons so that once the wedges are in place no slippage relative to the anchorage occurs.

Anchorage by bonding systems shall be capable of retaining the strands so that once tensioning has been completed no cracks or abnormal or unstable deformations occur in the anchorage zone,

a) In order to ensure resistance against variations in tensile stress, dynamic loads and the effects of fatigue, the anchorage system shall resist 2 million cycles, using a tensile stress variation of 80 N/mm^2 and a maximum tensile stress equivalent to 65% of the maximum tensile unit load of the tendon. In addition, no breaks in the anchorage zone or breaks of more than 5% of the reinforcement cross-section in its free length shall be admitted.
b) The anchorage zones shall resist a breaking load that is 1.1 times that of the anchorage, with a coefficient of efficiency indicated in sub-paragraph a) of this article.

Anchorage plates and devices shall be designed so that there are no offset areas, eccentricity, or loss of orthogonality between tendons and plates.

The tests necessary for verifying these characteristics shall be as indicated in UNE 41184.

The anchorage's constituent elements shall be subjected to effective and rigorous control and be fabricated so that all members of the same type, system and size are interchangeable. They shall also be capable of absorbing the dimensional tolerances set out for the cross-sections of reinforcements without any loss of effectiveness.

35.2.2 Splice elements

Splice elements in active reinforcements shall satisfy the same requirements set out for the strength and retention efficiency of anchorages.

35.3 Sheaths and accessories

35.3.1 Sheaths

Suitable ducts must be installed in structural elements comprising post-tensioned reinforcements to house these reinforcements. Sheaths that are either left embedded in the concrete or recovered once the member has hardened are usually used for this purpose.

They shall resist being crushed or scratched by tendons, ensure uniform continuity in the duct's trajectory and good leak tightness along their entire length, not exceed the designed friction coefficients during tensioning, satisfy the design bonding requirements and not chemically attack the tendon.

Cement grout or mortar shall never be allowed to penetrate their interior during concreting. Splices between the various sheath sections and between sheaths and anchorages shall therefore be completely watertight.

The internal diameter of sheaths, bearing in mind the type and cross-section of the reinforcement which is to be housed therein, shall be suitable so that the concrete can be placed correctly.

35.3.2 Types of sheaths and selection criteria

The most commonly used type of sheaths are:

- Sheaths comprising ribbed spiral-wound metal hoops These are in the form of metal tubes with projections or ribs at their surface to encourage their bonding with the concrete and injection grout and increase their transverse rigidity and longitudinal flexibility. They shall have sufficient crush resistance so that they do not deform or buckle during in situ handling, under the weight of the fresh concrete or due to the effect of accidental blows, etc. they shall also withstand contact with internal vibrators without any risk of perforation. The minimum thickness of hoops shall be 0.3 mm. They shall satisfy the provisions in standard UNE EN 523 and UNE EN 524.

  These are most frequently used for internal prestressing to withstand normal pressures in sections with a radius of curvature of more than 100 times their internal diameter. In thin structural elements (prestressed slabs) this type of sheath may have an oval cross-section in order to better fit the available space.

- Plastic ribbed hoop sheathes. The morphological characteristics of these sheathes are similar to those above, with a minimum thickness of 1 mm. The plastic parts and accessories shall be chloride-free (see 37.3).

If internal prestressing tendons with radii of curvature and at pressures similar to those for metal hoops need to be electrically insulated, the following may be used:

- Metal rigid pipes. These shall be at least 2 mm thick, have strength characteristics greatly superior to sheaths comprising spiral-wound hoops, and may be used for both internal and external prestressing. the poor bonding between plain pipes and concrete or grout shall be taken into consideration with internal prestressing.

  These are also acceptable on their own with internal pressures of more than 1 bar, and varying according to their thickness. They are therefore recommended to ensure full watertightness in structures with considerably high placing heights. These are also suitable for paths with curvature radii less than 100 ϕ (ϕ = internal diameter of the tube). They shall be curved with suitable mechanical means, and may have minimum radii at their perimeter as small as 20 ϕ provided that the following are satisfied:

  a) The tensioning in the tendon in the curve zone does not exceed 70% of the ultimate load.

  b) The sum of the angular deviation along the tendon does not exceed $3\pi/2$, or the deviation zone (minim radius) is deemed to be a passive anchorage point, and tensioning takes place at both ends.

- High density polyethylene pipes. These shall have the necessary thickness to withstand an internal nominal pressure of 0.63 N/mm^2 if they are low pressure pipes, made from PE80, and 1 N/mm^2 if they are high pressure pipes from PE80 or PE100.

  These are usually used for the protection of external prestressing tendons.

- Inflatable rubber pipes. These shall be sufficiently strong for their purpose and be removed once the concrete has hardened. To remove them, they shall be inflated and removed from the element or structure by pulling one end. They may even be used in long elements with straight, polygonal or curved tendons.

  Unless otherwise demonstrated, this type of device is not recommended as a protection sheath, since their corrosion screening function is lost. This type is recommended in pre-cast elements with mated joints, but with the rubber tube being inserted inside the actual metal hoop sheaths during concreting, in order to ensure the continuity of the trajectory of the tendon at joints, and avoiding inflexion points or small displacements.

3.5.3.3 Accessories

The most commonly used injection accessories are:

- Drainage pipe: Small piece of pipe that connects the prestressing ducts with the outside; generally fitted at the highest and lowest points of their trajectory, in order to facilitate air venting and water drainage from their interiors, and so that the gradual advance of the injection substance can be followed.

- Injection nozzle: Part used to introduce the injection product into the ducts housing the active reinforcements. Special T-shaped parts are used to install injection

nozzles and drainage pipes.

- Separator: A generally metal or plastic part, which sometimes is used to uniformly distribute the various constituent reinforcements of the tendon inside the sheaths.

- Trumpet: This is generally truncated in shape and links the distribution plate with the sheath. In some prestressing systems, the trumpet is incorporated in the distribution plate.

- Master tube: Generally a polyethylene tube with an external diameter slightly less than the internal diameter of the sheath, fitted to ensure a smooth trajectory.

All these devices shall be correctly designed and produced so that they can be correctly sealed, and their water tightness ensured at nominal injection pressure with the due safety coefficient. In the absence of a specific specification from the supplier, these accessories shall withstand a nominal pressure of 2 N/mm^2.

The location for these devices and their characteristics shall be defined in the design document and their suitability shall be checked by the supplier of the prestressing system.

35.4 Filling materials

35.4.1 General

In order to prevent the corrosion of active reinforcements, tendons housed in ducts or sheaths fitted inside members shall be filled using a suitable injection product.

Filling materials may be either adhesive or non-adhesive, but shall always satisfy the requirements indicated in 35.4.2 and 35.4.3.

Filling materials shall not contain any substances such as chlorides, sulphides, nitrates etc., which could pose a risk to the reinforcements, the injection material itself, or the member's concrete.

35.4.2 Adhesive filling materials

These products shall generally be cement grout or mortars that conform to 35.4.2.2, whose constituents shall satisfy the specifications in 35.4.2.1. Other materials may be used as adhesive filling materials, provided that they satisfy the requirements of 35.4.2.2. and it is ensured that they do not adversely affect the passivity of the steel.

35.4.2.1 Constituent materials

The constituents of injection grouts and mortars shall satisfy the specification in Articles 26, 27, 28 and 29 of this Code. They shall also comply with the requirements indicated below, in which the constituents are expressed by mass, apart from water, which may be expressed by mass or volume. The accuracy of the mixture shall be ± 2% in the case of cement and admixtures, and ± 1 % in the case of water.

Cement:

The cement shall be CEM 1 type Portland cement. The use of other types of cement shall be specially justified.

Water:

This shall not contain more than 300 mg/l of ion chloride nor more than 200 mg/l of ion sulphate.

Aggregates:

When aggregates are used for the preparation of an injection material, they shall comprise siliceous or calcareous grains, and be free from acid ions or laminar particles, such as mica or slate.

Admixtures:

These may not contain any substances that are harmful to pre-tensioned steel, in particular: thiocyanates, nitrates, formicates and sulphurs. They shall also comply with the following requirements:

- content < 0.1%
- Cl^- < 1 g/l of liquid admixture
- Their pH shall be within the limits defined by the manufacturer
- Their dry extract shall be ± 5% of the figure defined by the manufacturer

35.4.2.2 Requirements for filling materials

Injection grouts and mortars shall comply with the following:

- Their chloride ions (Cl-) content shall not be more than 0.1% of the cement mass.
- Their sulphate ions (SO3) content shall not be more than 3.5% of the cement mass.
- Their sulphur ions (S^{2-}) content shall not be more than 0.01% of the cement mass.

Injection grouts and mortars shall additionally have the following properties, determined by means of UNE-EN 445.

- Their fluidity measured using the Marsh cone method, with a cone of 100 mm diameter, shall be less than 25 s, within the temperature range specified by the manufacturer, both immediately following mixing and 30 minutes afterwards, or until injection has been completed, or until the period of time defined by the manufacturer or prescribed by the designer has elapsed. The fluidity of thixotropic grouts shall be measured using a viscosity meter and be between 120 g/cm^2 and 200 g/cm^2.
- The amount of water exuded after 3 hours shall be less than 2% during the exudate tube test, within the temperature range defined by their manufacturer.
- Their reduction in volume shall not exceed 1%, and any volumetric expansion shall be less than 5%. No reduction in volume is permitted in grouts containing expanding agents.
- The water/cement ratio shall be at least 0.44.
- Their compression strength shall be at least 30 N/mm^2 at 28 days.
- Setting shall not start within 3 hours in the temperature range defined by the manufacturer. Setting time shall not exceed 24 hours.
- Capillary absorption at 28 days shall be less than 1g/cm2.

35.4.3 Non-adhesive filling materials

These products shall comprise greases, wax, polymers, bituminous products, polyurethane or, generally, any material suitable for providing the active reinforcements with the necessary protection, but without any bonding between the products and the ducts.

The manufacturer shall guarantee the physical and chemical stability of the material selected throughout the structure's useful life, or of the product's service life, as specified in the design document, if it is going to be periodically replaced during the life of the structure.

Any non-adhesive filling material shall be chosen from the European technical suitability document for prestressing systems, and hence shall conform to the ETAG 013 Guideline, Annex C.4.

Article 36. Infill elements in floor slabs

An infill element is a pre-fabricated element of a composite or lightweight floor slab, intended to form, together with their associated beams, ribs, in situ upper slab and structural reinforcements the resisting unit of a floor slab.

Collaborating infill elements may be ceramic or concrete or made from any other resistant material. Their compression strength shall not be less than the design strength of the floor slab's in situ concrete. The vertical parts of these elements bonded to the concrete, may be deemed to form part of the slab's resistant cross-section.

Lightweight infill elements may be made form ceramic, concrete, expanded polystyrene or other sufficiently rigid materials. These members shall satisfy the conditions set out below:

- The breaking load under flexure for any infill element shall be greater than 1.0 kN determined in accordance with UNE 53981 in the case of expanded polystyrene elements, and according to UNE 67037, in the case of elements made from other materials.
- The average expansion value due to moisture in ceramic elements, determined in accordance with UNE 67036, shall not be more than 0.55 mm/m, and no individual measurement shall exceed 0.65 mm/m. Infill elements that exceed the total expansion limit value may be used, however, provided that their mean potential expansion value, according to UNE 67036, and determined prior to their incorporation, is no more than 0.55 mm/m.
- The fire reaction behaviour of the elements that are, or may be, exposed to the outside during the structure's useful life, shall satisfy the applicable fire reaction classification. If used in buildings, they shall conform to paragraph 4 of Section SI.1 of the Basic Building Document "Fire safety" of the Technical Building Code, depending on the location of the slab. This classification shall be determined in accordance with standard UNE EN 13501-1 depending on the final conditions of use, in other words, in conjunction with the coatings that the elements are going to receive. Blocks made using flammable materials shall be fire protected using efficient protective layers. The suitability of the protective layers shall be empirically confirmed for the temperature range and foreseeable deformations at the design fire load.

CHAPTER 7

DURABILITY

Article 37. Durability of concrete and reinforcements

37.1 General

The durability of a concrete structure is its capacity to withstand, for the duration of its designed service life, the physical and chemical conditions to which it is exposed, and which could cause it to deteriorate as a result of effects other than the loads and stresses considered in its structural analysis.

A durable structure shall be created using a strategy which is able to take account of all the possible deterioration factors and consequently take place during each of the design, construction and use phases of the structure; the Designer shall therefore establish a durability strategy that takes account of the specifications in this Chapter. Alternatively, the Durability Limit State may be verified with regard to the corrosion processes of reinforcements, as indicated in Section 1 of Annex 9.

A correct strategy for durability shall take account of the fact that a structure may have various structural elements submitted to different types of environment.

37.1.1 Consideration of durability at the design stage

The design of a concrete structure shall include the measures necessary so that the structure has the useful service life determined as indicated in Article 5, as a function of the environmental aggressivity conditions to which it may be subjected. A durability strategy shall therefore be included in accordance with the criteria set out in paragraph 37.2. If, due to the structure's characteristics, the Designer deems it appropriate for the structure's useful life to be estimated by verifying its Durability Limit State, the methods indicated in Annex No. 9 of this Code may be used.

The aggressivity to which the structure is subjected shall be identified using the environment type, according to 8.2.1.

The document shall include supporting evidence for the exposure classes selected for consideration for the structure. The drawings shall also show the type of environment for which each element has been designed.

The design shall define the structural shapes and details which facilitate water drainage and which are efficient in the light of the possible concrete deterioration mechanisms.

Equipment elements, such as supports, joints, drains, etc., may have a shorter service life than the structure itself; where appropriate, the adoption of design measures which facilitate the maintenance and replacement of these elements during the use phase shall be therefore examined.

37.1.2 Consideration of durability during the construction phase

High quality on-site work, in particular curing, has a decisive influence on ensuring a durable structure is built.

The specifications relating to durability shall be satisfied in their entirety during the construction phase. Offsetting of the effects of a failure to comply with these specifications

shall not be permitted unless this is justified by satisfying, where appropriate, the Durability Limit State set out in Annex 9.

37.2 Durability strategy

37.2.1 General requirements

In order to satisfy the requirements set out in Article 5, a strategy which encompasses all the possible deterioration mechanisms will need to be followed, and special measures adopted, depending on the degree of aggressivity to which each element is to be subjected.

The durability strategy shall at least include the following aspects:

a) Selection of suitable structural shapes, in accordance with the provisions in 37.2.2.
b) Ensuring suitable concrete quality and, in particular, its outer layer, in accordance with the provisions in 37.2.3.
c) Adopting a suitable cover thickness for the protection of reinforcements, according 37.2.4 and 37.2.5.
d) Checking the maximum crack width value, in accordance with 37.2.6.
e) The provision of surface protections in highly aggressive environments, according to 37.2.7.
f) Adoption of corrosion protection methods in accordance with the provisions in 37.4.

37.2.2 Selection of structural shapes

The design shall specify the structural layouts, the geometric shapes and details that are compatible with ensuring suitable durability of the structure.

The use of structural designs which are particularly vulnerable to the effects of water shall be avoided and, wherever possible, direct contact between water and concrete shall be minimised.

The design shall also include the details necessary to facilitate rapid water elimination and include suitable systems for its control and drainage (outlets, ducting, etc.) In particular, the passage of water across joints and sealed areas shall be avoided wherever possible.

Suitable systems shall be provided to prevent surfaces being subjected to splashes or soaking.

If the structure includes sections comprising internal hollows or cavities, the necessary systems for their ventilation and drainage shall be provided.

Wherever possible, access shall be provided, apart from in small scale structures, to all the structure's elements, and the appropriateness of providing special systems to facilitate inspection and maintenance during the service phase, in accordance with the provisions in Chapter 17 of this Code, shall be examined.

37.2.3 Concrete quality requirements

A strategy based on the durability of a structure must ensure suitable concrete quality, in particular in the more superficial areas, where damage can occur.

A suitable quality concrete is a concrete which satisfies the following requirements:

- The selection of raw materials in accordance with the provisions in Articles 26 to 35.
- Suitable mix proportioning, as indicated in paragraph 37.3.1, and sub-paragraph 37.3.2.
- Correct placing, as indicated in Article 71.
- Curing of the concrete, as indicated in sub-paragraph 71.6
- Strength in accordance with expected structural performance and durability requirements.
- Performance in accordance with the requirements in sub-paragraph 37.3.1.

37.2.4 Coverings

The concrete covering is the distance between the external surface of the reinforcement (including hoops and stirrups) and the nearest concrete surface.

For the purposes of this Code, the minimum covering of a passive reinforcement is a covering depth maintained at every point on the reinforcement. In order to ensure these minimum values, a nominal cover value of r_{nom}, defined as follows shall be set out in the design document:

$$r_{nom} = r_{min} + \Delta r$$

In which:

r_{nom} Nominal cover

r_{min} Minimum covering

Δr Covering margin, as a function of its execution control level and whose value shall be:

- 0 mm in pre-cast elements subject to intense execution inspection
- 5 mm in the case of in situ elements subject to intense execution inspection, and
- 10 mm in all other cases

Nominal cover is the value to be shown in drawings, and used to define the spacers. The minimum covering is the value which shall be guaranteed at any point in the element and which is checked in accordance with the provisions in Article 95.

In special cases where a severely aggressive atmosphere obtains or where particular fire risks obtain, the coverings indicated in this Article shall be increased.

37.2.4.1 Specifications for coverings for passive and active pre-tensioned reinforcements

The minimum coverings for passive and active pre-tensioned reinforcements shall satisfy the following:

a) The covering of main reinforcements shall be at least the diameter of the bars concerned (or their equivalent diameter in the case of bundled bars) and at least 0.80 times the maximum size of the aggregate, unless the arrangement of reinforcements relative to faces renders the placing of concrete difficult; in this case, a figure of 1.25 times the maximum aggregate size, as defined in paragraph 28.3, shall be used.

b) No point in the covering of any grade of passive reinforcement (including stirrups) or of any pre-tensioned active reinforcement shall be less than the minimum values indicated in tables 37.2.4.1 .a, 37.2.4.1 .b and 37.2.4.1 .c.

c) In order to comply with the requirements in sub-paragraph c) above, designers of pre-cast elements (secondary beams or plates) for one-way reinforced or pre-stressed concrete slabs in fixed industrial installations shall be able to include, as well as the concrete thickness, the thickness of the slab's coverings, if these are compact, impermeable, definitive and permanent. In these situations, the actual concrete covering shall never be less than 15 mm. Annex 9 includes a few recommendations for calculating the contribution referred to in this sub-paragraph if covering mortars are used.

d) Bent bars shall have a covering of at least two diameters, measured in a direction perpendicular to the curve plane.

e) The covering of concreting boundary surfaces, if reinforcements are permanently embedded in the body of the concrete, shall not be less than the diameter of the bars concerned or their equivalent diameter, in the case of

bundled bars, or less than 0.8 times the maximum aggregate size.

If, for any reason (durability, fire protection or the use of bundled bars) the covering needs to be more than 50 mm, the potential advantage of installing a distribution mesh halfway down the thickness of the covering in its tensile stressed area shall be considered using a geometric ratio of 5 per millimetre of the covering area, in the case of bars or bundled bars with a diameter (or equivalent diameter) of 32 mm or less and 10 per millimetre in the case of diameters (or equivalent diameters) of more than 32 mm.

The minimum covering for members concreted against the ground shall be 70 mm unless the ground has been prepared and blinding concrete laid; the provisions in the paragraph above shall not be applicable in this case.

Table 37.2.4.1.a Minimum coverings (mm) for general exposure classes I and II

Exposure class	Type of cement	Characteristic strength of the concrete [N/mm^2]	Useful life of the structure (tg), (years)	
			50	100
I	Any	$f_{ck} \geq 25$	15	25
II a	CEM I	$25 \leq f_{ck} < 40$	15	25
		$f_{ck} \geq 40$	10	20
	Other types of cement or if the concrete contains additives	$25 \leq f_{ck} < 40$	20	30
		$f_{ck} \geq 40$	15	25
II b	CEM I	$25 \leq f_{ck} < 40$	20	30
		$f_{ck} \geq 40$	15	25
	Other types of cement or if the concrete contains additives	$25 \leq f_{ck} < 40$	25	35
		$f_{ck} \geq 40$	20	30

Table 37.2.4.1.b Minimum covering (mm) for general exposure classes III and IV

Concrete	Cement	Useful structural life (t_g) (years)	General exposure class			
			IIIa	IIIb	IIIc	IV
Reinforced	CEM III, CEM IV, CEM II/B-S, B-P, B-V, A-D or concrete with micro-silica	50	25	30	35	35
		100	30	35	40	40
	Other useable cements	50	45	40	*	*
		100	65	*	*	*
Pre-stressed	CEM II/A-D or with silica fume additive of more than 6%	50	30	35	40	40
		100	35	40	45	45
	Other useable cements according to Article 26	50	65	45	*	*
		100	*	*	*	*

* These situations will require excessive coverings, thus making it difficult to make the element and are therefore inadvisable. It is therefore recommended that their Durability Limit State is verified, as indicated in Annex 9, based on the concrete's characteristics, ad set out in the Project's Technical Specifications.

In the case of deterioration mechanisms other than corrosion of reinforcements, the values in table 37.2.4.1.c shall be used.

Table 37.2.4.1.c Minimum coverings for specific exposure classes

Exposure class	Type of cement	Characteristic strength of the concrete [N/mm^2]	Useful life of the structure (t_g), (years)	
			50	100
H	CEM III	$25 \leq f_{ck} < 40$	25	50
		$f_{ck} \geq 40$	15	25
	Other types of cement	$25 \leq f_{ck} < 40$	20	35
		$f_{ck} \geq 40$	10	20
F	CEM I I/A-D	$25 \leq fck < 40$	25	50
		$fck \geq 40$	15	35
	CEM III	$25 \leq fck < 40$	40	75
		$fck \geq 40$	20	40
	Other types of cement or, if the concrete contains additives	$25 \leq fck < 40$	20	40
		$fck \geq 40$	10	20
E (1)	Any	$25 \leq fck < 40$	40	80
		$fck \geq 40$	20	35
Qa	CEM III, CEM IV, CEM II/B-S, B-P, B-V, A-D or concrete containing more than 6% micro silica or more than 20% fly ash		40	55
	Other usable cements	-	*	*
Qb, Qc	Any	-	(2)	(2)

(*) These situations would require excessive coverings

(1) These values are for moderately severe abrasion conditions. If severe abrasion is anticipated, a detailed study will need to be carried out.

(2) The Designer shall set these minimum covering values, and as appropriate, additional measures, in order to suitably guarantee the concrete's protection and the reinforcement's protection in the specific chemically aggressive situation concerned.

The minimum covering values in tables 37.2.4.1.a, 37.2.4.1.b and 37.2.4.1.c are associated with the simultaneous compliance with the mix proportioning specifications for concrete, indicated in 37.3 for the various exposure classes. If experimental data concerning the aggressivity of the environment in similar structures located in adjoining areas, and with the same degree of exposure are available, or if it is decided to adopt more stringent concrete characteristics in the design than those indicated in the articles, the Designer shall be able

to check compliance with the Durability Limit State in accordance with the provisions in Annex 9.

If the Designer sets out therein the adoption of special protection measures from corrosion for the reinforcements (cathodic protection, galvanised reinforcements or the use of corrosion inhibitors in the concrete) certain reduced minimum coverings may be provided for general classes III and IV, which shall correspond to those indicated in this Article for general class IIb, provided that the necessary measures are taken to ensure the effectiveness of these special measures for the entire useful service life of the structure, and specified in the design.

37.2.4.2 Coverings for post-tensioned active reinforcements

The minimum coverings for post-tensioned active reinforcements in the horizontal and vertical directions (Figure 37.2.4.2) shall be at least the following limits, and never exceed 80 mm:

- 40 mm;
- the greater of the following values; the smaller dimension or half the bigger dimension of the sheath or sets of sheaths in contact.

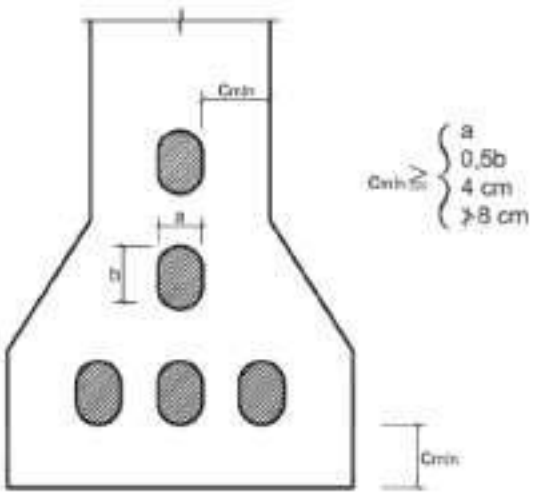

Figure 37.2.4.2

37.2.5 Spacers

Coverings shall be assured by arranging the corresponding spacer elements installed in situ.

These blocks or spacers shall be arranged in accordance with the provisions in 69.8.2. They shall comprise materials that resist the concrete's alkalinity, and shall not cause corrosion in the reinforcements. They shall be at least as impermeable to water as the concrete, and resist any chemical attacks to which they may be subject.

Irrespective of whether they are temporary or definitive, they must be made from concrete, mortar, rigid plastic or a similar material, and have been specially designed for this purpose.

Concrete spacers, as regards their strength, permeability, hygroscopicity, thermal expansion, etc., shall be of a quality comparable to that of the concrete used to make the element. Similarly, if they are made from mortar, they shall be of a similar quality to that of the mortar contained in the structure's concrete.

In order to ensure that spacers made from other materials that do not contain cement bond well with the member's concrete, they shall have openings whose total cross-section shall be at least 25% of the spacer's total surface area.

The use of wood and any other construction residual material, whether brick or concrete is prohibited. The use of metal in visible spacers is also prohibited. In any case the material of the spacers will not contain asbestos.

37.2.6 Maximum values for crack openings

Durability is, along with functional and appearance considerations, one of the reasons why crack widths need to be controlled. The maximum values used shall be as indicated in table 5.1.1, as a function of environmental exposure classes.

37.2.7 Special protection methods

Special protection systems may be adopted in particularly aggressive environments, when normal protection measures are deemed insufficient, such as:

- Applying surface coverings, using specific products for concrete protection (paints or coatings), in accordance with the standards in the UNE-EN 1504 series, as applicable.
- Protection of the reinforcements using coatings (i.e. galvanised reinforcements).
- Cathodic protection of reinforcements using sacrificial anodes or applied current, according to UNE-EN 12696.
- Stainless steel reinforcements, according to UNE 36067.
- Active corrosion inhibitors.

Additional protections may have a useful life shorter than that of the structural element. The design shall therefore include schedules for the appropriate maintenance of these protection systems.

37.3 Durability of concrete

The durability of concrete is its capacity to perform satisfactorily when exposed to physical loads or aggressive chemicals and suitably protect its reinforcements and other metal elements embedded in it for the duration of the structure's service life.

Choosing raw materials and composing the concrete mix shall always be undertaken in the light of the special characteristics of the structure or a constituent part, as well as the nature of the loads or attacks that can be anticipated in each case.

37.3.1 Mix proportions and concrete performance

The following requirements shall be satisfied In order to ensure suitable durability of the concrete,:

a) General requirements:
   - Maximum water/cement ratio, according to 37.3.2.
   - Minimum cement content, according to 37.3.2.

b) Additional requirements:
   - Minimum occluded air, as appropriate, according to 37.3.3.
   - Use of sulphate-resistant cement, as appropriate, according to 37.3.4.
   - Use of sea water-resistant cement, as appropriate, according to 37.3.5.
   - Erosion resistance, as appropriate, according to 37.3.6.
   - Alkali-aggregate reaction resistance, as appropriate, according to 37.3.7.

37.3.2 Limitations on water and cement content

Depending on the exposure classes to which the concrete is to be subjected, as defined in 8.2.2 and 8.2.3, the specifications indicated in table 37.3.2.a shall be satisfied.

If the environment includes one or more specific exposure classes, the most severe criteria of those set out for the classes in question, shall be set for each parameter.

If additions are used to make the concrete, these may be taken into consideration for the purposes of calculating the cement content and water/cement ratio. The cement content C (kg/m^3) in table 37.3.2.a shall therefore be replaced by C+KF, and the A/C ratio replaced by A/ (C+KF) where F(kg/m^3) is the addition content and K is its coefficient of efficiency.

In case of flying ashes, a value of K not greater than 0.20 will be adopted when using a cement CEM I 32.5, neither greater than 0.40 with cements CEM I with other strength categories. The Project Manager may allow, at his responsibility, higher values of the efficiency coefficient, but not greater than 0.65, provided the deduction as a centred estimation in median of the real characteristic value, defined as the 5% quartile of the K distribution function. That estimation would be based in an experimental study previously validated by the concrete certification entity in which not only strength aspects, but also durability aspects are considered.

A value of K not exceeding 2, shall be adopted for silica fumes, apart from in concretes with a water/cement ratio of more than 0.45, which are to be subjected to exposure classes H or F, when a value of 1 shall be adopted for K.

The cement contents, when additives are used, may not be less than 200, 250 or 275 kg/m^3, depending on whether the concrete is mass, reinforced or pre-stressed concrete.

37.3.3 Resistance to water penetration

An experimental check can be undertaken on a completed porous structure, to see if its concrete is sufficiently impermeable for the environment in which it is going to be located, by verifying the concrete's water impermeability, using the low pressure water penetration depth determination method, according to la UNE 12390-8.

This verification shall be undertaken when, in accordance with 8.2.2, the general exposure classes are either III or IV, or if the environment represents any particular exposure class.

A concrete shall be deemed to be sufficiently water impermeable if the results from the water penetration test satisfy all of the following:

Environmental exposure class	Specification for the maximum depth	Specification for an average depth
IIIa, IIIb, IV, Qa, E, H, F, Qb (in the case of mass concrete or reinforced concrete elements)	50 mm	30 mm
IIIc, Qc Qb (only in the case of pre-stressed concrete elements)	30 mm	20 mm

Table 37.3.2.a Maximum water/cement ratio and minimum cement content

Mix proportioning parameter	Type of concrete	EXPOSURE CLASS												
		I	IIa	IIb	IIIa	IIIb	IIIc	IV	Qa	Qb	Qc	H	F	E
Maximum ratio a/c	mass	0,65	-	-	-	-	-	-	0,50	0,50	0,45	0,55	0,50	0,50
	reinforced	0,65	0,60	0,55	0,50	0,50	0,45	0,50	0,50	0,50	0,45	0,55	0,50	0,50
	pre-stressed	0,60	0,60	0,55	0,45	0,45	0,45	0,45	0,50	0,45	0,45	0,55	0,50	0,50
Minimum cement content (kg/m^3)	mass	200	-	-	-	-	-	-	275	300	325	275	300	275
	reinforced	250	275	300	300	325	350	325	325	350	350	300	325	300
	pre-stressed	275	300	300	300	325	350	325	325	350	350	300	325	300

Tabla 37.3.2.b Minimun strength recommended according to exposure classes (*)

Mix proportioning parameter	Type of concrete	EXPOSURE CLASS												
		I	IIa	IIb	IIIa	IIIb	IIIc	IV	Qa	Qb	Qc	H	F	E
Minimun stregth (N/mm²)	mass	20	-	-	-	-	-	-	30	30	35	30	30	30
	reinforced	25	25	30	30	30	35	30	30	30	35	30	30	30
	pre-stressed	25	25	30	30	35	35	35	30	35	35	30	30	30

(*) These values are the generally expected strengths when using good quality aggregates and the strict specifications of durability included in this Code. It is an orientative table, to help for coherence between durability and strength specifications. In this sense, it must be remembered that in some geographic zones where aggregates only can fulfill strictly the specifications defined in this Code, it could be not easy to reach these values.

37.3.4 Frost-resistance of concrete

When a concrete is subjected to an exposure class F, a minimum occluded air content of 4.5%, determined in accordance with UNE-EN 12350-7 shall be adopted.

37.3.5 Sulphate-resistance of concrete

Where sulphate is present, the cement shall have additional sulphate resistance characteristics according to the current Code for the acceptance of cements, wherever the sulphate content of the surrounding water is 600 mg/l or more, or where the surrounding medium is soil, the sulphate content is 3,000 mg/kg or more (apart from in the case of seawater whose chloride content is more than 5,000 mg/l, when the provisions in 37.3.6 shall apply.

37.3.6 Seawater-resistance of concrete

If a structural element is subject to an environment which includes a general class of type IIIb or IIIc, the cement used shall have an additional seawater-resistance characteristic according to the Code in force for the acceptance of cements

37.3.7 Erosion-resistance of concrete

If a concrete is to be subjected to an exposure class E, an erosion-resistant concrete should be sought. The following measures shall therefore be adopted:

- Minimum cement contact and maximum water/cement ratio, according to table 37.3.2.a.
- Minimum strength of concrete of 30 N/mm^2.

- The fine aggregate shall be quartz or another material which has at least the same hardness.
- Coarse aggregate shall have a Los Angeles coefficient of less than 30.
- The cement contents indicated below for each maximum aggregate size *D* shall not be exceeded:

D	Maximum cement content
10 mm	400 kg/m^3
20 mm	375 kg/m^3
40 mm	350 kg/m^3

- Prolonged curing, lasting at least 50% longer, shall be adopted as shall the remaining requirements for a concrete not subject to erosion.

37.3.8 Alkaline-aggregate reactivity resistance

Alkaline-aggregate reactions may occur simultaneously with the presence of a humid atmosphere, the presence of a high alkaline content in the concrete and the use of aggregates containing reactive constituents.

For the purposes of this Article, damp environments shall be deemed to be environments whose general exposure class, according to 8.2.2, are other than I or IIb.

In order to prevent alkaline-aggregate reactions, one of the following measures shall be adopted:

a) The use of non-reactive aggregates, according to 28.7.6.
b) The use of cements with an alkaline content expressed as equivalent sodium oxide ($0.658\ K_2O + Na_2O$) less than 0.60% of the weight of the cement.

If the use of raw materials that satisfy the aforementioned requirements is impossible, an individual experimental study shall be conducted on the suitability of adopting one of the following measures:

a) Use of cements containing additives, apart from lime, stone filler, according to la UNE 80301 and UNE 80307.
b) Use of additives in the concrete, according to the specifications in 30.

In these situations, the suitability of adopting an additional protection in the form of surface waterproofing may also be examined.

37.4 Corrosion of reinforcements

The reinforcements shall be corrosion-free for the entire service life of the structure. The corrosion aggressivity of the environment for the reinforcements is defined using the general exposure classes, according to 8.2.2.

In order to prevent corrosion, all the considerations relating to covering thicknesses, indicated in 37.2.4 shall be taken into consideration.

Unless cathodic protection systems are used, reinforcements shall not be allowed to come into contact with other metals with a very different galvanic potential.

This Code covers the option to use systems for protecting reinforcements from corrosion in accordance with the provisions in 37.2.7.

Similarly, the use of constituent materials that contain depassivating ions, such as chlorides, sulphides or sulphates in proportions greater than those indicated in Articles 27, 28, 29 and 30, is also prohibited.

37.4.1 Corrosion of passive reinforcements

In addition to the specific restriction on the chloride ion content for each of the content's constituent materials, the total chloride content in a concrete containing passive reinforcements shall be less than the following limits:

- Reinforced concrete structures or mass concrete structures containing reinforcements to prevent cracking: 0.4% of the cement weight

37.4.2 Corrosion of active reinforcements

The use in pre-stressed structures of any substance that catalyses the absorption of hydrogen by the steel is prohibited.

In addition to the specific limitation on the chloride ion content for each of its constituent materials, the total chloride content of a pre-stressed concrete shall not exceed 0.2% of the cement weight.

Splices or fixings made from metals other than steel and cathodic protection are prohibited.

Metal coated steel shall generally not be used. The Project Manager shall permit this form of protection to be used use if an experimental study confirming its performance as suitable for each specific structure is carried out.

37.4.3 Protection and conservation of active reinforcements and anchorages

The precautions necessary to prevent active reinforcements being damaged, particularly notches forming or local temperature rises being generated that could modify their characteristics or lead to incipient corrosion during their storage, installation, or following their incorporation in the structure, shall be adopted.

CHAPTER 8

INFORMATION CONCERNING MATERIALS TO BE USED IN THE DESIGN

Article 38. Characteristics of steel for reinforcements

38.1 General

The characteristics of the steel used for the design described in this article, are referred to the properties of the passive reinforcements placed in the structural element in accord to the article 3.2.1 in the EN 1992-1-1.

38.2 Characteristic stress-strain diagram for passive reinforcement steel

The characteristic stress-strain diagram is the diagram used as a basis for the calculations and associated in this Code with a percentage of 5% of the lowest stress-strain diagrams.

The characteristic stress-strain diagram for tensioned steel is the diagram whose stress values, corresponding to strains not exceeding 10 per 1000, have a confidence level of 95% relative to the values obtained during tensile tests conducted in accordance with UNE EN 10080. The same diagram may be adopted for compression.

In the absence of accurate experimental data, the characteristic diagram may be assumed to adopt the shape in figure 38.2, and this diagram may be taken as being characteristic, if the standardised values for the yield stress given in Article 32 are adopted. The compression arm shall always be symmetrical to the tension arm, in relation to the origin.

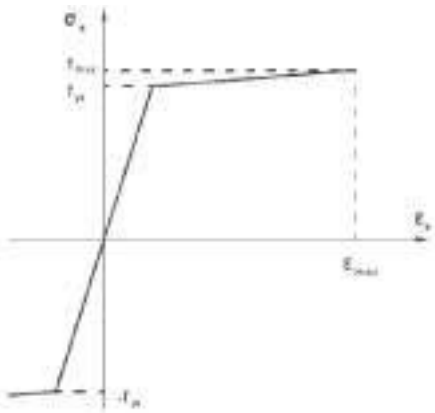

Figure 38.2. Characteristic stress-strain diagram for passive reinforcements

38.3 Design strength of steel in passive reinforcements

The following value, f_{yd} shall be considered to be the design yield strength of the steel:

$$f_{yd} = \frac{f_{yk}}{\gamma_s}$$

In which f_{yk} is the characteristic yield stress and γ_s is the partial safety coefficient defined in Article 15.

The expressions indicated are valid for tension and compression.

If steels with different yield stresses are used in one section, each shall be considered in the calculation, together with its corresponding diagram.

38.4 Design stress-strain diagram for steel in passive reinforcements

The design stress-strain diagram for steel in passive reinforcements (in tension or compression), shall be calculated from the characteristic diagram using oblique affinity, parallel to Hooke's line, in a ratio of $1/\gamma_s$.

When the diagram in figure 38.2 is used, the design diagram for figure 38.4 is obtained, in which it may be noted that, starting from f_{yd} a second leg, with a positive slope obtained using oblique affinity from the characteristic diagram, or a second horizontal leg, with the latter being generally sufficiently accurate, can be considered,.

Other simplified design diagrams may be used, provided that they produce results that are sufficiently confirmed by experience.

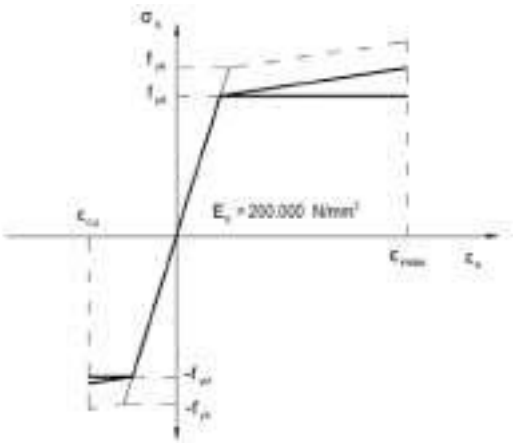

Figure 38.4. Design stress-strain diagram in passive reinforcements

A maximum strain of steel in tension of $\varepsilon_{max} - 0.01$, shall be adopted in the design

38.5 Characteristic stress-strain diagram of steel in active reinforcements

The characteristic stress-strain diagram for the steel set out by its manufacturer may be used in active reinforcements (wire, bar or strand) up to a strain of at least $\varepsilon_p = 0.010$, and so that for a given strain the tensions are exceeded in 95% of cases.

If this guaranteed diagram is not available, the diagram shown in figure 38.5 may be used. This diagram comprises a first straight section with slope ε_p and a second curve section, starting from 0.7 f_{pk}, defined by the following expression:

$$\varepsilon_p = \frac{\sigma_p}{E_p} + 0{,}823\left(\frac{\sigma_p}{f_{pk}} - 0{,}7\right)^5 \qquad para \quad \sigma_p \geq 0{,}7\, f_{pk}$$

In which E_p is the modulus of longitudinal strain defined in 38.8.

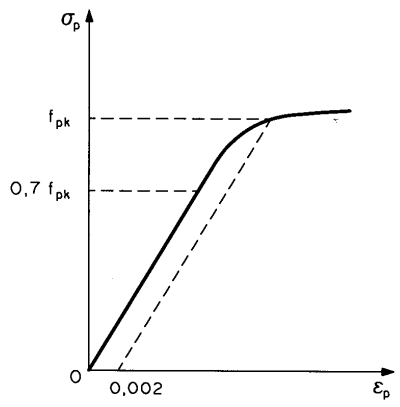

Figure 38.5. Characteristic stress-strain diagram for active reinforcements

38.6 Design strength of steel in active reinforcements

The following shall be used for the design strength of steel in active reinforcements.

$$f_{pd} = \frac{f_{pk}}{\gamma_s}$$

In which f_{pk} is the characteristic yield stress and γ_s is the partial safety coefficient of the steel indicated in Article 15.

38.7 Design stress-strain diagram for steel in active reinforcements

The design stress-strain diagram for the steel in active reinforcements shall be calculated from the corresponding characteristic diagram using oblique affinity, parallel to Hooke's straight line, in a ratio of $1/\gamma_s$ (see figure 38.7.a).

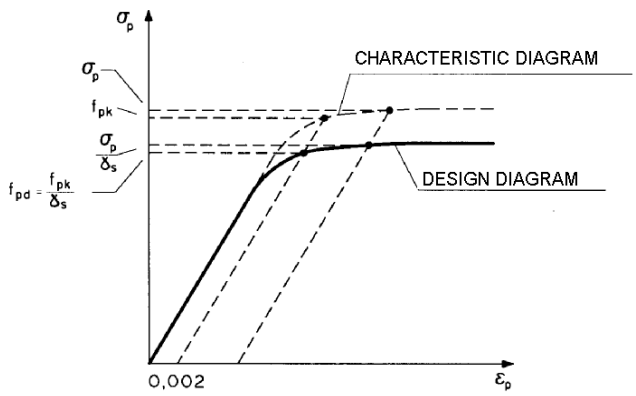

Figure 38.7.a. Design stress-strain diagram in active reinforcements

For simplification purposes, based on f_{pd}, $\sigma_p = f_{pd}$ may be used (see figure 38.7b)

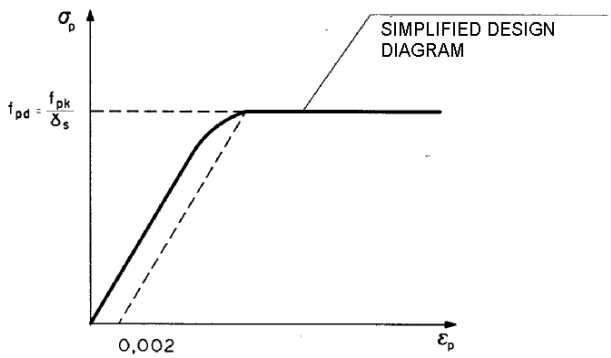

Figure 38.7.b. Design stress-strain diagram in active reinforcements

38.8 Modulus of longitudinal strain of steel in active reinforcements

The value of E_p = 200,000 N/mm^2, may be taken as the modulus of longitudinal strain in steel in reinforcements comprising wires or bars, unless experimentally otherwise confirmed.

The values set by the manufacturer or experimentally determined may be adopted in strands as the reiterative and noval values. In the characteristic diagram (see 38.5) the value of the reiterative modulus shall be taken. If no earlier experimental values are available prior to the project, the value of E_p = 190,000 N/mm^2 may be adopted.

When checking elongation during tensioning, the value of the noval modulus value determined experimentally shall be used.

38.9 Relaxation of steel in active reinforcements

The relaxation ρ of steel at constant length, for an initial tensile stress of $\sigma_{pi} = \alpha\, f_{max}$ with the fraction α, being between 0.5 and 0.8 for time t, may be estimated using the following expression:

$$\log \rho = \log \frac{\Delta \sigma_p}{\sigma_{pi}} = K_1 + K_2 \log t$$

in which:

$\Delta_{\sigma p}$ Loss of stress due to relaxation at constant length at the end of time t, in hours.

K_1, K_2 Coefficients which vary according to the type of steel and the initial stress (figure 38.9).

The steel manufacturer shall supply the relaxation values at 120 h and 1,000 h, for initial stresses of 0.6, 0.7 and 0.8 of f_{max} at a temperature of 20±1°C and shall guarantee the value at 1,000 h for α = 0.7. From these relaxation values, the coefficients K_1 and K_2 for α = 0.6, 0.7 and 0.8, may be obtained.

In order to obtain relaxation with another value of α, this may be linearly interpolated by allowing for α = 0.5; ρ = 0.

The value which is obtained for the estimated life of the structure, expressed in hours, or 1,000,000 hours in the absence of this information, may be taken as the final value of p_f .

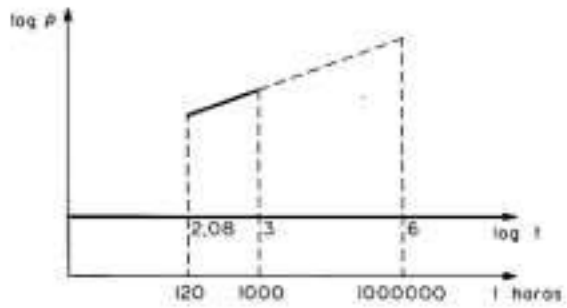

Figure 38.9

38.10 Fatigue characteristics of active and passive reinforcements

The variation in maximum stress, due to fatigue loading, shall be less than the limit fatigue values indicated in table 38.10.

Table 38.10 Fatigue limit for passive and active reinforcements

Type of reinforcement	Fatigue Limit $\Delta\sigma_D$ [N/mm^2]	
	Direct bonding	Bonding inside steel sheaths
Passive reinforcements:		
- Bars	150	--
- Electro-welded mesh	100	--
Active reinforcements:		
- Wires	150	100
- 7-wire strands	150	100
- Pre-tensioned bars	--	100

In the absence of specific and representative results for bent bars, the fatigue limit indicated in table 38.10 shall be reduced depending on the following factor:

$$\Delta\sigma_{D,red} = \left(1 - 3\frac{d}{D}\right)\Delta\sigma_D$$

in which:

d Diameter of the bar.

D Bending diameter.

No reduction in the fatigue limit will be necessary in vertical stirrups with a diameter of 10 mm or less.

38.11 Fatigue characteristics of anchorage devices and splicing of active reinforcement

Anchorage and splicing devices shall be located, wherever possible, in sections where the minimum variations in stresses occur.

Generally, the fatigue limit for this type of element is lower than the limit for reinforcements, and shall be supplied by the manufacturer after specific and representative tests have been conducted.

Article 39. Characteristics of the concrete

39.1 Definitions

The design characteristic strength, f_{ck}, is the value adopted in the design for compression strength, as the basis for calculations. It is also called the specified characteristic strength or design strength.

The actual on-site characteristic strength value, $f_{c\ real}$, is the value corresponding to the 5% quantile in the compression strength distribution of the concrete supplied to the site.

The estimated characteristic strength value, $f_{c\ est}$, is the value that calculates or quantifies the actual characteristic strength on site based on a finite number of standardised compression strength test results on test pieces collected in situ. It can be abbreviated to characteristic strength.

The average tensile strength value, $f_{ct,m,}$ may be calculated, in the absence of test results, using the following:

$$f_{ct,m} = 0{,}30\ f_{ck}^{2/3} \text{ if } f_{ck} \leq 50\ N/mm^2$$

$$f_{ct,m} = 0{,}58\ f_{ck}^{1/2} \text{ if } f_{ck} > 50\ N/mm^2$$

If test results are not available, the characteristic strength may be allowed to be less than the tensile strength, $f_{ct,k}$, (corresponding to the 5% quantile) indicated, as a function of the average tensile strength, $f_{ct,m}$, using the following formula:

$$f_{ct,k} = 0.70\ f_{ct,m}$$

The average flexural strength, $f_{ct,m,fl,}$ is indicated by the following expression, which is a function of the total depth of the element *h* in mm:

$$f_{ct,m,fl} = \max\{(1{,}6 - h/1000)\, f_{ct,m};\ f_{ct,m}\}$$

The units are N and mm in all these formulae.

In this Code, the expression characteristic tensile strength refers always, unless otherwise indicated, to the lower characteristic tensile strength, $f_{ct,k}$.

39.2 Identification of concretes

Concretes shall be identified in accordance with the following format (which shall be shown in the drawings and the structure's Project Technical Specifications):

T - R / C / TM / A

In which:

T Symbol which will be HM in the case of a mass concrete , HA in the case of a reinforced concrete, and HP in the case of a pre-stressed concrete.
R Specified characteristic strength, in N/mm^2.
C Initial letter showing the type of consistency, as defined in 31.5.
TM Maximum aggregate size in millimeters as defined in 28.3.
A Designation of the environment, in accordance with 8.2.1.

It is recommended that the following series is used for the specified characteristic strength:

20, 25, 30, 35, 40, 45, 50, 55, 60, 70, 80, 90, 100

In which the figures indicate the specified characteristic compression strength of the concrete at 28 days, expressed in N/mm^2.

The strength of 20 N/mm^2 is limited to mass concretes.

The concrete prescribed shall be such that, in addition to mechanical strength, it ensures compliance with the durability requirements (minimum cement content and maximum water/cement ratio) corresponding to the environment of the structural element and indicated in 37.3.

39.3 Characteristic stress-strain diagram of the concrete

The characteristic stress-strain diagram of the concrete depends on a large number of variables: age of the concrete, duration of loading, shape and type of cross-section, nature of the set of load factors in a cross-section, type of aggregate, moisture level etc.

Given the difficulty of providing a characteristic stress-strain diagram for concrete applicable to each specific design, the simplified characteristic diagrams such as those provided in Article 21 may be used for practical purposes,.

39.4 Design strength of the concrete

The following value shall be used as the design compression strength of the concrete:

$$f_{cd} = \alpha_{cc} \frac{f_{ck}}{\gamma_c}$$

in which:

- α_{cc} Factor which takes account of the fatigue in the concrete when it is subjected to high levels of compression stress due to long duration loads. The value of α_{cc} = 1, is used in this Code.
- f_{ck} The characteristic design strength.
- γ_c Partial safety coefficient used in the values indicated in Article 15.

The following value shall be considered as the concrete's design tensile strength.

$$f_{ctd} = \alpha_{ct} \frac{f_{ct,k}}{\gamma_c}$$

in which :

- α_{cc} Factor which takes account of the fatigue in the concrete when it is subjected to high levels of compression stress due to long duration loads. The value of α_{ct} = 1, is used in this Code.
- $f_{ct,k}$ Characteristic tensile strength.
- γ_c Partial safety coefficient used in the values indicated in Article 15.

39.5 Design stress-strain diagram for the concrete

When designing sections subjected to a normal set of load factors in cross-section, one of the following diagrams shall be used for Ultimate Limit States:

a) Rectangular parabola diagram

This comprises a parabola of degree n and a rectilinear segment (Figure 39.5.a). The vertex of the parabola is on the abscissa ε_{c0} (strain of the concrete under ultimate load in simple compression), and the end vertex of the rectangle is on the abscissa ε_{cu} ((ultimate bending strain of the concrete). The maximum ordinate in this diagram corresponds to a compression of f_{cd}.

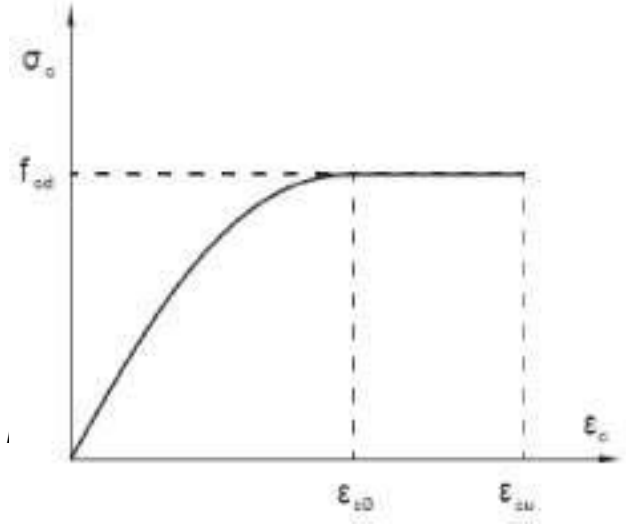

Figure 39.5.a. Parabolic-rectangular design diagram

The equation in this parabola is:

$$\sigma_c = f_{cd}\left[1-\left(1-\frac{\varepsilon_c}{\varepsilon_{c0}}\right)^n\right] \qquad \text{if } 0 \le \varepsilon_c \le \varepsilon_{c0}$$

$$\sigma_c = f_{cd} \qquad \text{if } \varepsilon_{c0} \le \varepsilon_c \le \varepsilon_{cu}$$

The values of the maximum compressive strain in the concrete under simple compression, ε_{c0}, are as follows:

$$\varepsilon_{c0} = 0{,}002 \qquad \text{if } f_{ck} \le 50 \text{ N/mm}^2$$

$$\varepsilon_{c0} = 0{,}002 + 0{,}000085\left(f_{ck} - 50\right)^{0{,}50} \qquad \text{if } f_{ck} > 50 \text{ N/mm}^2$$

The ultimate strain values, ε_{cu}, are provided by:

$$\varepsilon_{cu} = 0{,}0035 \qquad \text{if } f_{ck} \le 50 \text{ N/mm}^2$$

$$\varepsilon_{cu} = 0{,}0026 + 0{,}0144\left[\frac{\left(100 - f_{ck}\right)}{100}\right]^4 \qquad \text{if } f_{ck} > 50 \text{ N/mm}^2$$

And the value *n*, which defines the exponent of the parabola is obtained as follows:

$$n = 2 \qquad \text{if } f_{ck} \leq 50 \text{ N/mm}^2$$

$$n = 1{,}4 + 9{,}6\left[\left(100 - f_{ck}\right)/100\right]^4 \qquad \text{if } f_{ck} > 50 \text{ N/mm}^2$$

b) Rectangular diagram

This is formed from a rectangle whose depth λ(x) *h*, and size, η(x) f_{cd}, depend on the depth of the neutral axis, *x* (figure 39.5.b) and the concrete's strength. The values are:

$$\eta(x) = \eta \qquad if\ 0 < x \leq h$$
$$\eta(x) = 1 - (1 - \eta)\frac{h}{x} \qquad if\ h \leq x < \infty$$

$$\lambda(x) = \lambda\frac{x}{h} \qquad if\ 0 < x \leq h$$
$$\lambda(x) = 1 - (1 - \lambda)\frac{x}{h} \qquad if\ h \leq x < \infty$$

where:

η = 1,0 if $f_{ck} \leq 50$ N/mm^2
η = 1,0 - (f_{ck}-50)/200 if $f_{ck} > 50$ N/mm^2

λ = 0,8 if i $f_{ck} \leq 50$ N/mm^2
λ = 0,8 - (f_{ck}-50)/400 if $f_{ck} > 50$ N/mm^2

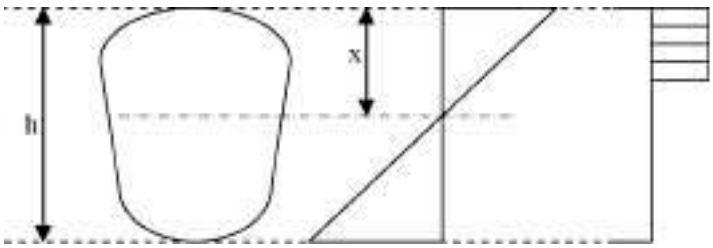

Figure 39.5.b. Rectangular calculation diagram

c) Other calculation diagrams, such as parabolic, bi-rectilinear, trapezoidal, etc. diagrams shall be accepted, provided that the results obtained from these are satisfactorily equivalent to those from the rectangle-parabola, and err on the side of safety.

39.6 Modulus of longitudinal deformation of the concrete

The following shall be adopted as the longitudinal secant modulus of deformation, E_{cm} at 28 days (slope of the secant of the actual curve σ-ε)):

$$E_{cm} = 8500\sqrt[3]{f_{cm}}$$

This expression shall be valid provided that the tensions in service conditions do not exceed the value of 0.40 f_{cm}, with f_{cm} being the average compression strength of the concrete at 28 days.

The initial modulus of longitudinal deformation of the concrete at 28 days, with regard to transient or rapidly varying loads (with the slope of the tangent at the origin), shall be taken to be approximately equal to

$$E_c = \beta_E \cdot E_{cm}$$

$$\beta_E = 1{,}30 - \frac{f_{ck}}{400} \leq 1{,}175$$

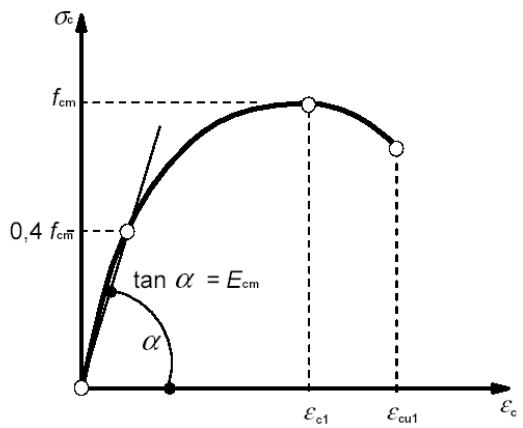

Figure 39.6. Diagrammatic representation of the stress-strain relationship in concrete

39.7 Shrinkage of concrete

When calculating the shrinkage value, the various influential variables have to be taken into consideration, in particular: ambient humidity, the thickness or smallest dimension of the element, the concrete's composition, and the time which has elapsed since it was produced, which defines how long shrinkage continues.

39.8 Creep in concrete

The stress-dependent strain at time *t,* for a constant stress, $\sigma(t_0)$, *of* less than 0.45 f_{cm}, applied at t_0, may be calculated in accordance with the following criterion:

$$\varepsilon_{c\sigma}(t, t_0) = \sigma(t_0)\left(\frac{1}{E_{c,t_0}} + \frac{\varphi(t, t_0)}{E_{c28}}\right)$$

in which t_0 and t are expressed in days.

The first sum in brackets represents the instantaneous strain for a unit of stress, and the second a unit of creep, in which:

E_{c28} Modulus of instantaneous longitudinal strain in the concrete, with the tangent at the origin, at 28 days as defined in 39.6.

$E_{c,t0}$ Secant value of the longitudinal strain in the concrete at time, t_0 applied to the load, as defined in 39.6.

$\varphi(t,t_0)$ Creep coefficient.

39.9 Poisson's rate

A mean value of 0.20 shall be used for Poisson's rate, relating to elastic deformations at normal tensions in use.

39.10 Thermal expansion coefficient

A figure of 10^{-5} shall be used

CHAPTER 9

STRENGTH CAPACITY OF STRUTS, TIES AND NODES

Article 40. Strength capacity of struts, ties and nodes

40.1 General

The struts-and-ties model is a suitable procedure for explaining the performance of structural concrete elements in both B and D regions (Article 24.).

The elements of a struts-and-ties model comprise struts, ties and nodes.

Ties usually comprise active or passive reinforcements.

A strut can represent a compression stress-field of uniform width, as shown in figure 40.1.a, or a fan-shaped compression stress-field of variable width, as shown in figure 40.1.b.

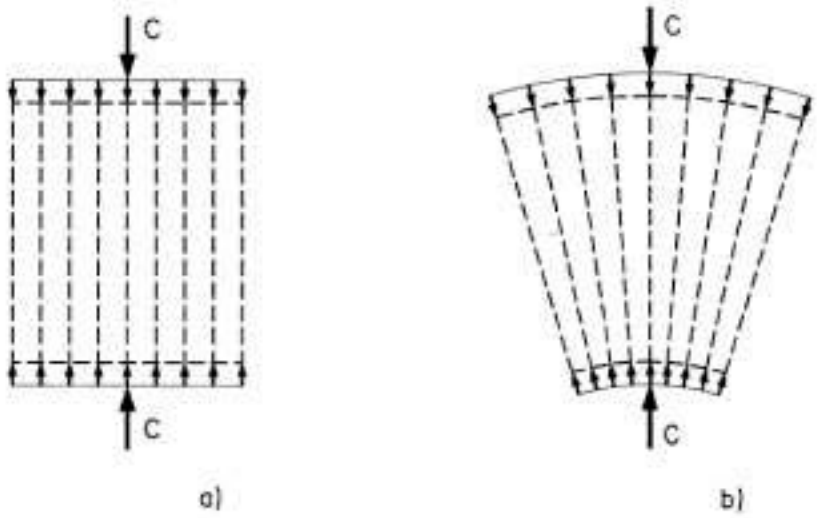

Figures 40.1.a and b

A node is an area where the compression stress-fields or tie tensions intersect.

This Article describes the criteria for verifying each of these elements at Ultimate Limit State.

Although the criteria provided in this Chapter comprise verifications at Ultimate Limit State, they do not imply automatic verification of the Limit State for Cracking, several limitations are defined herein which, together with the general principles provided in Article 24, ensure suitable crack control in practice,.

40.2 Strength capacity of ties comprising reinforcements

It will be assumed that the reinforcement reaches design stress at Ultimate Limit State, i.e.

– in the case of passive reinforcements $\sigma_{sd} = f_{yd}$

– in the case of active reinforcements $\sigma_{pd} = f_{pd}$

When compatibility conditions are not explicitly investigated, the maximum strain in struts at Ultimate Limit State shall need to be limited, thus simultaneously indirectly limiting the tensions in the reinforcement Serviceability Limit State.

The carrying capacity of a strut comprising reinforcements may be expressed as:

$$A_s f_{yd} + A_p f_{pd}$$

In which:

A_s Cross-section of the passive reinforcement
A_p Cross-section of an active reinforcement.

40.3 Strength capacity of struts

The capacity of a compressed strut is greatly influenced by the tensions and strains which are transverse to the compression stress-field and cracks present.

40.3.1 Concrete struts in regions with uniaxial compression

This is the case of the compression flange of a beam, due to bending stresses, the strength capacity of which can be evaluated from the stress-strain diagrams indicated in 39.5, where the maximum stress for the compressed concrete is limited to:

$$f_{lcd} = f_{cd}$$

40.3.2 Concrete struts with cracking diagonal or parallel to the strut

In this case, the compression stress-field forming a concrete strut can exhibit cracking that is diagonal or parallel to the direction of the compressions. Due to the state of stress and cracking in the concrete, its strength capacity in compression reduces considerably.

In a simplified manner, the strength capacity of the concrete can be defined in these situations in the following way:

- Where there are cracks parallel to the struts and a transverse reinforcement that is sufficiently anchored.

$$f_{lcd} = 0.70 f_{cd}$$

- When the struts transmit compressions via cracks whose opening is controlled by sufficiently anchored transverse reinforcement (this is the case of beam webs subjected to shear stress).

$$f_{lcd} = 0.60 f_{cd}$$

- When the compressed struts transfer compressions via wide cracks (this is the case of elements subjected to tension or T-beam flanges under tension).

$$f_{lcd} = 0.40 f_{cd}$$

40.3.3 Concrete struts with compressed reinforcements

The reinforcement may be considered to make an effective contribution to the strength capacity of struts when it is located inside and parallel to the compression stress-field and there is sufficient transverse reinforcement to prevent these bars from buckling.

The maximum tension in the compressed steel may be considered to be:

$$\sigma_{sd,c} = f_{yd}$$

when compatibility conditions can be established to justify it, or

$$\sigma_{sd,c} = 400\ N/mm^2$$

when no explicit compatibility conditions can be established.
In this case, the strength capacity of the struts may be expressed as:

$$A_c\, f_{1cd} + A_{sc}\, \sigma_{sd,c}$$

In which A_{sc} is the area of the strut reinforcement.

40.3.4 Confined concrete struts

The strength capacity of struts can be increased if the concrete is suitably confined (figure 40.3.4). For static loads, the strength of the concrete may be increased by multiplying f_{1cd} by:

$$(1 + 1{,}5\, \alpha\omega_w)$$

in which:

ω_W Volumetric mechanical amount of confinement, defined by (see figure 40.3.4):

$$\omega_W = \frac{W_{sc}}{W_c}\frac{f_{yd}}{f_{cd}} = \frac{\sum A_{si} \cdot l_i}{A_{cc} \cdot s_t} \cdot \frac{f_{yd}}{f_{cd}}$$

Where:

W_{sc} Volume of confining transverse reinforcement
A_{si} Area of each of the transverse confining reinforcements.
l_i Length of each of the transverse confining reinforcements.
W_c Volume of confined concrete .
A_{cc} Area of concrete enclosed by the confining steel.
s_t Longitudinal spacing between the transverse confining reinforcements.

α Factor that takes account of the spacing between hoops, the type of concrete and the configuration of the confining reinforcement, whose value is: $\alpha = \alpha_c, \alpha_s\, \alpha_e$.

α_c Factor that takes account of the concrete strength, with a value of :

$\alpha_c = 1.0$ in the case of conventional concrete, with $f_{ck} \leq 50\ Nmm^2$.

$\alpha_c = 1.2 - \frac{f_{ck}}{250}$ in the case of high strength concrete, with $f_{ck} > 50\ Nmm^2$.

α_s Factor that takes account of the effect of the longitudinal spacing between hoops, with a value of:

$\alpha_s = \left(1 - \frac{s_t}{2b_c}\right) \cdot \left(1 - \frac{s_t}{2h_c}\right)$ if the core is rectangular, with dimensions b_c,

h_c and is contained by longitudinally separated hoops s_t.

$\alpha_s = \left(1 - \frac{s_t}{2D}\right)^2$ if the area of the concrete confined by the steel has a circular cross-section of diameter D and is confined by hoops that are distance s_t apart.

$\alpha_s = \left(1 - \frac{s_t}{2D}\right)$ if the area of the concrete confined by the steel has a circular cross-section of diameter D and is contained by a spiral reinforcement with a pitch s_t.

α_e Factor that takes account of the effectiveness of the transverse reinforcement installed inside the confined area of the section, with a value of:

$$\alpha_e = 1 - \frac{\sum_{i=1}^{n} s_{1,i}^2}{6 \cdot A_{cc}}$$

in which the sum includes all the longitudinal reinforcements effectively tied by the transverse confining reinforcement and s_l is the spacing between the longitudinal reinforcements.

In the case of rectangular sections whose longitudinal laterally tied reinforcements are distance s_b apart along the width, and s_h along the height of the section, the factor α_e can be expressed as:

$$\alpha_e = 1 - \frac{\sum_{i=1}^{n} \left(s_{b,i}^2 + s_{h,i}^2\right)}{6 \cdot b_c \cdot h_c}$$

In the case of sections with circular hoops $\alpha_e = 1.0$.

In this case, the strength capacity of the struts can be expressed as:

$$A_{cc}\,(1 + 1.5\,\alpha_{\omega w})\,f_{lcd}$$

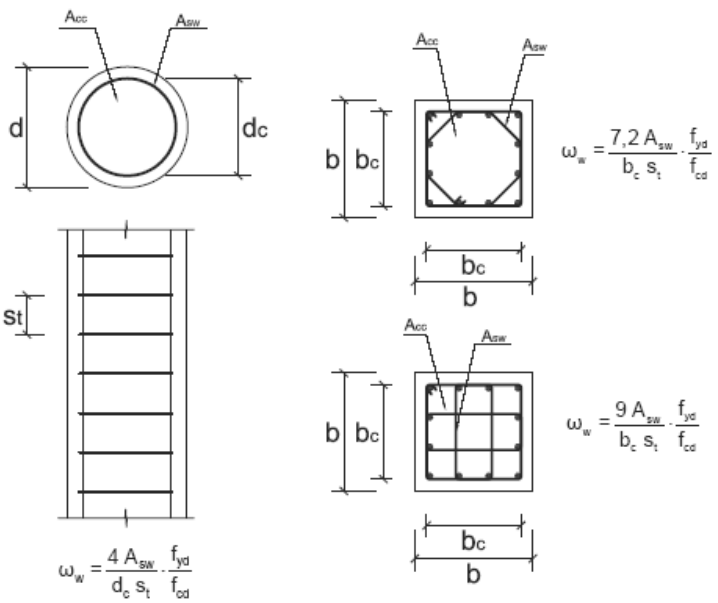

VOLUMETRIC MECHANICAL RATIO OF CONFINEMENT

Figure 40.3.4

40.3.5 Struts intersected by sheaths containing active reinforcements

If struts are intersected by sheaths of active reinforcements, whether bonded or unbonded, and if the sum of their diameters is more than b/6, with b being the total width of the strut, the widths to be considered in the verification of the strength capacity shall be reduced in accordance with the following factor:

$$b_0 = b - \eta \Sigma \phi$$

In which:

b_0 Width of the strut to be considered in the verification.
$\Sigma\phi$ Sum of the diameters of the sheaths, at the least favourable level.
η Coefficient which depends on the reinforcement's characteristics.
η = 0.5 in the case of sheaths with a bonded active reinforcement.
η = 1.0 in the case of sheaths with an unbonded active reinforcement.

40.4 Strength capacity of nodes

40.4.1 General

Nodes shall be designed, dimensioned and reinforced, so that all the acting forces are balanced, and the ties are suitably anchored.

The concrete at nodes may be subjected to multi- stress states and this particular feature shall be taken into consideration since it involves an increase or a reduction in its load carrying capacity.

The following aspects shall be verified at nodes:

- That the ties are properly anchored (Articles 69 and 70).
- That the maximum tension in the concrete does not exceed its maximum load carrying capacity.

40.4.2 Multi-compressed nodes

In nodes that only connect struts in compression (see figures 40.4.2.a and 40.4.2.b) a multi-compressed tension state normally obtains, which enables the compressive strength capacity of the concrete to be increased in accordance with the following factors:

$$f_{2cd} = f_{cd}$$

In the case of biaxial compression states, and

$$f_{3cd} = 3.30\, f_{cd}$$

in the case of triaxial compression states.

If these compression strength capacity values of the concrete of the node are considered, they shall take account of the induced transverse tensile stresses which usually require individual reinforcement.

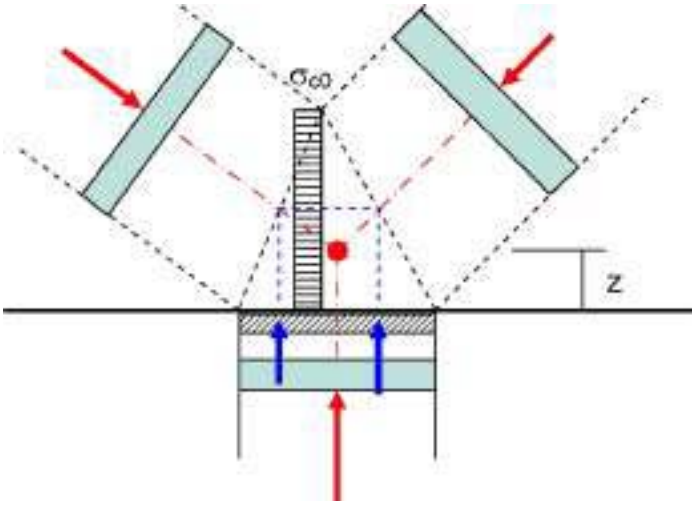

Figure 40.4.2.a

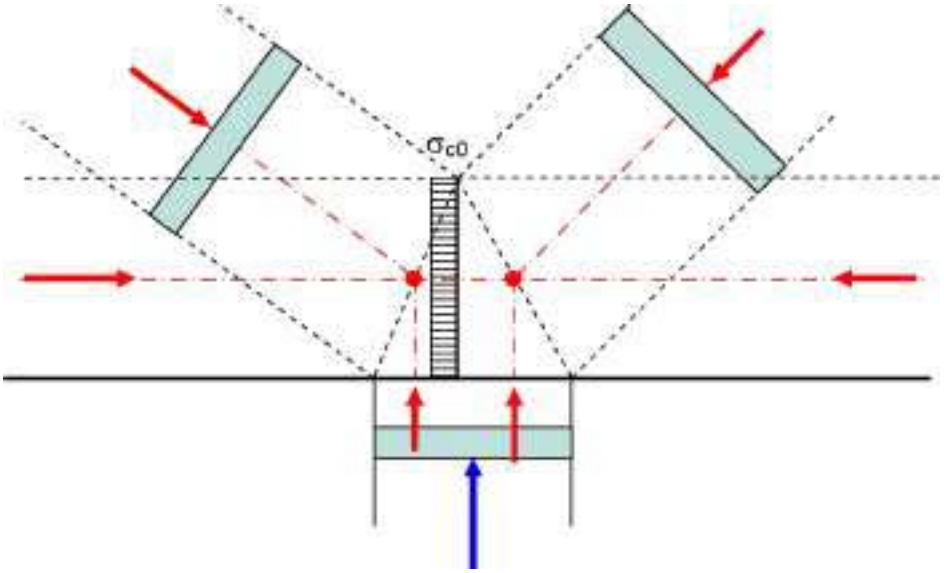

Figure 40.4.2.b

40.4.3 Nodes with anchored ties

The compressive strength capacity of this type of node is:

$$f_{2cd} = 0.70\, f_{cd}$$

CHAPTER 10

ULTIMATE LIMIT STATES DESIGN

Article 41. Equilibrium Limit State

It should be verified that the equilibrium limits (overturning, sliding, etc.), are not exceeded under the least favourable loading hypothesis, applying the Rational Mechanical Methods, and taking account of the actual conditions of the supports.

$$E_{d,estab} \geq E_{d,desestab}$$

in which:

$E_{d,estab}$ The effects of stabilising actions design value.

$E_{d,desestab}$ The effects of destabilising actions design value.

Article 42. Limit State at Failure under normal stresses

42.1 General design principles

42.1.1 Definition of the section

42.1.1.1 Dimensions of the section

In order to obtain strength capacity of a section, this shall be considered using its actual dimensions during the construction or service stage analysed, apart from in the case of T-beams, I-beams or similar members, when the actual widths indicated in 18.2.1 shall be taken into consideration.

42.1.1.2 Resistant section

For the purposes of the calculations for Limit State at Failure under normal stresses, the resistant section of concrete shall be obtained from the dimensions of the member and in compliance with the criteria in 40.3.5.

42.1.2 Basic hypotheses

The design of the ultimate strength capacity of sections shall be conducted on the basis of the following general hypothesis:

a) Failure is characterized by the value of strain in specified fibres of the section, defined by the failure deformation envelopes detailed in 42.1.3.

b) Strain in concrete follows a plane law. This hypothesis is valid for members in which the ratio between the distance between points of zero moment and the total depth is more than 2.

c) The strain ε_s in passive reinforcements remains equal to that of the concrete surrounding them.

The total strain in the active stress in bonded active reinforcements shall take account, not only of the strain that occurs in the corresponding fibre in the plane of strain at failure *(ε_0),* but also the strain produced by the pre-

stressing and the strain of decompression (figure 42.1.2) as defined below:

$$\Delta \varepsilon_p = \varepsilon_{cp} + \varepsilon_{p0}$$

in which:

ε_{cp} Strain of decompression in the concrete at the level of the fibre in the reinforcement concerned.

ε_{p0} Pre-deformation of the active reinforcement due to pre-stressing action during the stage concerned, taking account of any losses that have occurred.

d) The stress-strain design diagram for the concrete shall be any of those defined in 39.5. The tensile strength of the concrete shall be disregarded. The design stress-strain diagram for the steel for passive reinforcements shall be as defined in 38.4. The design stress-strain diagram for steel of active reinforcements shall be as defined in 38.7.

e) The general equations of balanced forces and moments shall be applied to the stresses in the section. This is how the ultimate strength can be calculated by integrating the stresses in the concrete and in the active and passive reinforcements.

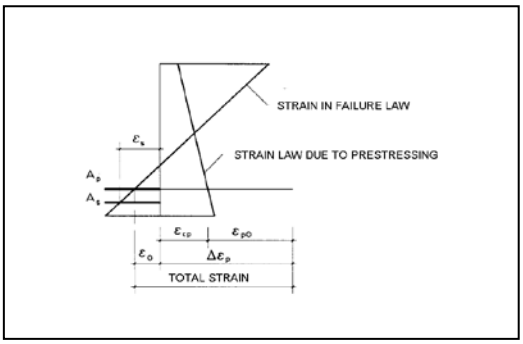

Figure 42.1.2

42.1.3 Strain envelopes

The limit stains in sections, depending on the type of stress, enable the following domains to be recognised (figure 42.1.3):

Domain 1: Pure or combined tension where the entire section is under tension. The strain lines turn about point A corresponding to an elongation in the reinforcement of the most tensioned of 10 per 1000.

Domain 2: Pure or combined bending, in which the concrete does not reach the ultimate bending strain. The strain lines turn about point A.

Domain 3: Pure or combined bending, in which the strain lines turn about point B corresponding to the ultimate bending strain of the concrete ε_{cu} defined in paragraph 39.5. The elongation of the most tensioned reinforcement is between 0.01 and ε_y with ε_y the elongation corresponding to the yield stress of the steel.

Range 4: Single or combined bending in which the strain lines turn around point B. The elongation of the most tensioned reinforcement is between ε_y and 0.

Range 4a: Combined bending in which all the reinforcements are compressed and where there is a small area of concrete in tension. The strain lines turn about point B.

Range 5: Single or combined compression in which both materials are in compression. The strain lines turn about point C, as defined by the line corresponding to the ultimate compression strain of concrete, ε_{c0}, defined in paragraph 39.5.

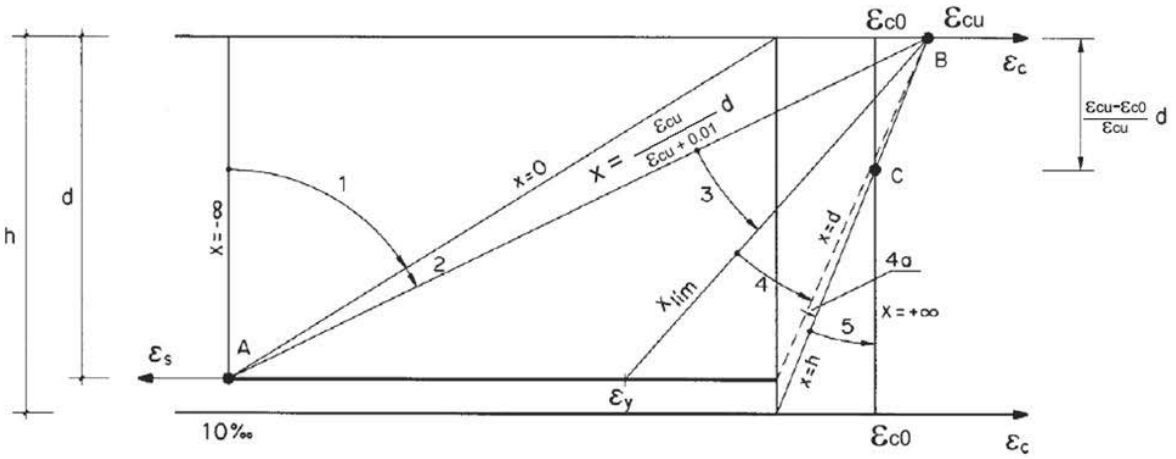

Figure 42.1.3

42.1.4 Design and verification of sections

Based on the basic hypotheses defined in 42.1.2, the equilibrium equations for the section can be established, producing a system of non-linear equations.

When design, the form and dimensions of the concrete section, the position of the reinforcement, the materials' characteristics and the design stresses are known but the plane of strain at failure and the reinforcement ratio are unknown.

When verifying, the shape and dimensions of the concrete section, the position and of the reinforcement and its ratio, and the materials' characteristics are known, and the plane of strain at failure and the sectional stresses are unknown.

42.2 Special cases

42.2.1 Minimum eccentricity

On supports and elements performing a similar function, every section submitted to an external normal compression stress N_d shall be capable of withstanding this compression, with a minimum eccentricity, due to the uncertainty at the position of the point of application of the normal stress, equal to the greater of the following values:

h/20 and 2 cm

This eccentricity shall be calculated starting from the centre of gravity of the gross section, and in the least favourable of the main directions and in only one direction.

42.2.2 The effect of confined concrete

Concrete confined in compression improves its strength and ductility characteristics; the latter being very important for ensuring structural performance, that permits optimum use of all the additional strength capacity of a statically indeterminate element.

Confinement of the compressed zone of concrete can be achieved with a suitable amount of transverse reinforcement that is appropriately arranged and anchored in accordance with the provisions in sub-paragraph 40.3.4.

42.2.3 Unbonded active reinforcements

The increase in tension in non-bonded active reinforcements, depends on the increase in length in the tendon between anchorages which, in their turn, depend on the overall deformation of the structure at Ultimate Limit State.

42.3 Provisions relating to reinforcements

42.3.1 General

In order for any passive reinforcements under compression to be taken into account during design, it will be necessary for them to be secured using hoops or stirrups, whose distance s_t apart and diameter ϕ_t are as follows:

s_t 15 ϕ_{min} (ϕ_{min} diameter of the thinnest compressed bar)

$\phi_t \geq$ ¼ ϕ_{max} (ϕ_{max} diameter of the thickest compressed bar)

s_t in compressed members shall always be less than the smaller dimension of the element and not exceed 30 cm.

Longitudinal passive resistant reinforcement, and skin reinforcement, shall be suitably distributed in order to avoid leaving concrete areas without any reinforcements, so that the distance between two consecutive longitudinal bars (*s)* satisfies the following limitations:

$s \leq$ 30 cm.

$s \leq$ Three times the gross thickness of the part of the member's section, flanges or webs on which they are going to be located.

In zones where the bars overlap or bend, it may be necessary to increase transverse reinforcement.

42.3.2. Pure or combined bending

Whenever failure in a section occurs due to pure or combined bending, the longitudinal tensile resistant reinforcement shall satisfy the following limitation:

$$A_p\, f_{pd} \frac{d_p}{d_s} + A_s\, f_{yd} \geq \frac{W_1}{z} f_{ct,m,fl} + \frac{P}{z}\left(\frac{W_1}{A} + e\right)$$

In which:

A_p Area of the bonded active reinforcement.
A_s Area of the passive reinforcement.
f_{pd} Design value of the tensile strength of bonded active reinforcement steel.
f_{yd} Design value of the tensile strength of passive reinforcement steel.
$f_{ct,m,fl}$ Average flexural strength of the concrete.
W_1 Section modulus of the gross section relating to the fibre under greatest tension.
d_p Depth of the active reinforcement from the most compressed fibre in the section.
d_s Depth of the passive reinforcement from the most compressed fibre in the section.
P Pre-stressing force with instantaneous losses disregarded.
A Gross concrete section area.
e Eccentricity of the pre-stressing relative to the centre of gravity of the gross section.
z Mechanical lever arm of the section. In the absence of more accurate calculations, this may be taken to be $z = 0.8\, h$.

If there is only active reinforcement in the design section, the following $\frac{d_p}{d_s} = 1$ shall be considered in the expression above.

In the case of end beam supports, apart from in one-way slabs comprising pre-cast elements, at least one third of the reinforcement necessary to withstand the maximum positive moment shall be continued as far as the supports; this shall be at least a quarter in intermediate beam supports. This reinforcement shall be extended from the centre line of the support by an amount which is the same as the net anchorage length (sub-paragraph 69.5.1).

The lower longitudinal reinforcement in slabs comprising reinforced joists shall comprise at least two bars.

42.3.3 Pure or combined compression

In sections subjected to pure or combined compression, the main reinforcements in compression, A'_{s1} and A'_{s2} (see figure 42.3.3) shall satisfy the following limitations:

$$A'_{s1}\, f_{yc,d} \geq 0.05\, N_d \qquad A'_{s1}\, f_{yc,d} \leq 0.5\, f_{cd}\, A_c$$
$$A'_{s2}\, f_{yc,d} \geq 0.05\, N_d \qquad A'_{s2}\, f_{yc,d} \leq 0.5\, f_{cd}\, A_c$$

In which:

$f_{yc,d}$ Design strength of the steel in compression $f_{yc,d} = f_{yd} > 400\ N/mm^2$.
N_d Factored normal acting compression force
f_{cd} Design value of concrete compressive strength.
A_c Area of the total concrete section.

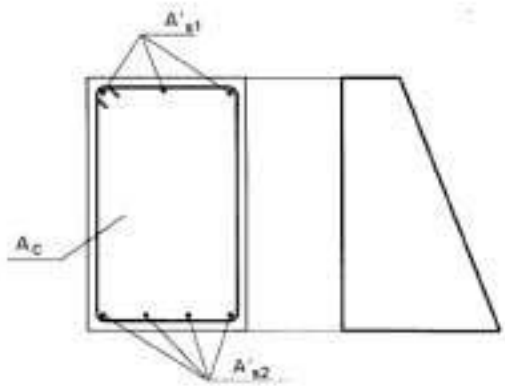

Figure 42.3.3

42.3.4 Pure or combined tension

In the case of concrete sections subjected to pure or combined tension, containing two main reinforcements, the following limitations shall be satisfied:

$$A_p\, f_{pd} + A_s\, f_{yd} \geq P + A_c\, f_{ct,m}$$

in which P is the pre-stressing force with instantaneous losses disregarded.

42.3.5 Minimum amount of reinforcement (geometric ratios)

Table 42.3.5 shows the values of the minimum geometric ratios which shall always be provided in the various types of structural elements, depending on the steel used, and provided that these values are more stringent than those indicated in 42.3.2, 42.3.3 and 42.3.4.

Table 42.3.5. Minimum geometric ratios as so many per 1,000, with reference to the total concrete section

Type of structural member		Type of steel	
		Steels with $f_y = 400 N/mm^2$	Steels with $f_y = 500 N/mm^2$
Columns		4.0	4.0
Slabs (1)		2.0	1.8
One- way slabs	Ribs (2)	4.0	3.0
	Distribution reinforcement perpendicular to ribs (3)	1.4	1.1
	Distribution reinforcement parallel to ribs (3)	0.7	0.6
Beams (4)		3.3	2.8
Walls (4)	Horizontal reinforcement	4.0	3.2
	Vertical reinforcement	1.2	0.9

(1) Minimum ratio of each of longitudinal and transverse reinforcements distributed along both sides. In the case of foundation slabs and footings, half of these values shall be used in each direction and arranged on the lower side.

(2) Minimum ratio with reference to a rectangular section of width b_w and a slab depth in accordance with figure 42.3.5. This ratio shall be strictly applied in ribs but not in solid areas. All joists shall have at least two longitudinal active or passive reinforcements, on their bottom flanges, symmetrical about the middle vertical plane.

(3) Minimum ratio with reference to the thickness of the in situ concrete compression layer.

(4) Minimum ratio corresponding to the side under tension. It is recommended that a minimum reinforcement of 30% of the nominal reinforcement is arranged on the opposite side.

(5) The minimum vertical ratio is the ratio corresponding to the side under tension. It is recommended that a minimum reinforcement of 30% of the nominal reinforcement is arranged on the opposite side.
Starting from a height of 2.5 m above the toe of the wall and provided that this distance is not less than half the wall height, the horizontal ratio may be reduced to 2%. If vertical contraction joints are incorporated that are 7.5 m or less apart, with the horizontal reinforcement interrupted, the minimum horizontal geometric ratios may be reduced to 2%. The minimum horizontal reinforcement shall be distributed on both sides. If both the wall's sides are visible, 50% shall be arranged on each side. In walls more than 50 cm thick, an effective area of maximum thickness 50 cm, with 25 cm distributed on each side, shall be considered, and the central area between these surface layers disregarded.

h

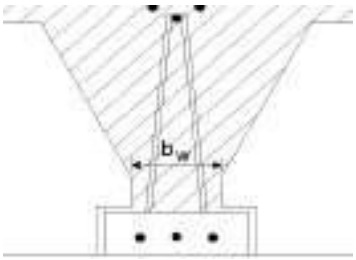

Figure 42.3.5 Rib detail.

Article 43. Instability Limit State

43.1 General

43.1.1 Definitions

For the purposes of the application of this Article 43, the following terms are used:

- *Non-sway structures* are structures whose nodes under design actions exhibit transverse displacement whose effects can be disregarded from the stability point of view of the assembly.
- *Sway structures* are structures whose nodes at design actions exhibit transverse displacement whose effects cannot be disregarded from the stability point of view of the assembly
- *Isolated supports* are statically determined supports, or supports in frames where the position of the points where the second-order moment is zero does not vary with the load size..
- *Mechanical slenderness* of a constant section support is the quotient of the effective buckling length l_0 of the support (distance between points of inflection of the column's deformed shape) divided by the radius of gyration *i* of the entire concrete section in the direction under consideration.
- *Geometric slenderness* of a constant section support is the quotient of the effective buckling length l_0 of the support divided by the dimension (*b* or *h*) of the section which is parallel to the plane of buckling.

Frame structures fitted with walls or wind-bracing cores and configured so that they guarantee the structure's torsional stiffness and which comply with the following, may clearly be considered as non-sway structures.

$$N_d \leq k_1 \frac{n}{n+1{,}6} \frac{\sum EI}{h^2}$$

in which:

N_d Factored vertical load which reaches the foundation with the structure fully loaded.

n Number of storeys.

h Total height of the structure from the upper foundation face.

ΣEI Sum of flexion rigidities of the counter-wind elements in the direction concerned, using the inertia of the gross section for the calculation of *I.*

k_i Value constant 0.62. This constant shall be reduced to 0.31 if the bracing elements cracked at Ultimate Limit State.

43.1.2 Scope

This Article relates to the verification of isolated supports and frame structures in general, in which the second order effects cannot be disregarded.

The application of this Article is limited to cases in which the effects of torsion can be disregarded.

This Code does not cover cases where the mechanical slenderness of the supports exceeds 200.

The second order effects may be disregarded in insulated supports if their mechanical slenderness is less than a limit slenderness associated with a loss of load bearing capacity in the support of 10%, with respect to a non-slender support. The lower slenderness limit λ_{inf} can be approximately calculated using the following expression:

$$\lambda_{\inf} = 35\sqrt{\frac{C}{\nu}\left[1+\frac{0,24}{e_2/h}+3,4\left(\frac{e_1}{e_2}-1\right)^2\right]} \not> 100$$

In which:

ν Design value of the on-dimensional or reduced axial force actuating in the support.

$$\nu = N_d/(A_c\, f_{cd})$$

e_2 First order eccentricity in the end of the support with the larger moment, deemed to be positive.

e_1 First order eccentricity at the end of the support with the lower moment which is positive if it has the same sign as e_2.
In sway structures, e_1/e_2 shall be taken to be equal to 1.0

h Depth of the section in the bending plane considered.

C Coefficient which depends on the configuration of reinforcements whose values are:

0.24 for symmetrical reinforcement on two opposing sides in the bending plane.
0.20 for equal reinforcement on the four sides
0.16 for symmetrical reinforcement on the lateral sides.

43.2 General method

The general verification of a structure, bearing in mind geometric and mechanical non-linearities can be undertaken in accordance with the general principles indicated in 19.2. This verification justifies the fact that the structure for the various combinations of possible actions, the structure does not present any global or local instability in its constituent members, and that the strength capacity of the various sections of those elements is not exceeded.

The design shall take account of the uncertainties associated with predicting second order effects and, in particular, dimension errors and uncertainties in the position and line of action of the axial loads.

43.3 Verification of non-sway structures

The overall forces in non-sway structures may be derived according to first order theory. Based on the forces obtained in this manner, a verification shall be undertaken on the second order effects of each support considered in isolation, in accordance with 43.5.

43.4 Verification of sway structures

Sway structures shall be subject to stability verification in accordance with the general basic principles of 43.2.

For common building structures of less than 15 storeys, in which the maximum displacement at their top at characteristic horizontal loads, calculated using the first order theory and with the stiffness corresponding to gross sections, does not exceed 1/750 of the total height, each support merely needs to be verified in isolation, with the forces obtained by applying the first order theory and the buckling length in accordance with the following:

$$\alpha = \sqrt{\frac{7,5+4(\psi_A+\psi_B)+1,6\,\psi_A\cdot\psi_B}{7,5+(\psi_A+\psi_B)}}$$

In which:

ψ Represents the ratio of rigidities $\sum\frac{EI}{L}$ of the supports at $\sum\frac{EI}{L}$ of the beams at each end A and B of the support considered. The gross inertia of the section

shall be used as the value of l.

α is the buckling length factor which shall take the following values as appropriate:

Double-fixed-end support	(l_o = 0.5 l)
Double-pinned support	(l_o = l)
Fixed-end and pinned support	(l_o =0.7 l)
Cantilever support	(l_o = 2 l)
Double-fixed-end support with moveable ends.	(l_o = l)

43.5 Verification of isolated supports

The approximate method of 43.5.1 or 43.5.2 may be used with supports with a mechanical slenderness of between λ_{inf} and 100.

The approximate method of 43.2 may be used with supports with a mechanical slenderness of between 100 and 200.

43.5.1 Approximate method. Straight combined bending

The cross-section for supports with constant section and reinforcement shall be dimensioned for a total eccentricity of:

$$e_{tot} = e_e + e_a \geq e_2$$

$$e_a = (1 + 0{,}12\beta)(\varepsilon_y + 0{,}0035)\frac{h + 20\,e_e}{h + 10\,e_e}\frac{l_0^2}{50\,i_c}$$

in which:

e_a Fictitious eccentricity used to represent the second order effects.

e_e Equivalent first order design eccentricity.

$e_e = 0.6e_{e2} + 0.4e_{e1} \geq 0.4e_{e2}$ for non-sway supports;

$e_e = e_2$ for sway supports.

e_1, e_2 Eccentricities of axial force at the ends of the member defined in 43.1.2.

l_0 Buckling length.

i_c Radius of gyration of the concrete section in the direction concerned.

h Total depth of the concrete section.

ε_y Deformation in the steel for the design stress f_{yd}, i.e.,

$$\varepsilon_y = \frac{f_{yd}}{E_3}$$

β Reinforcement factor obtained from

$$\beta = \frac{(d - d')^2}{4\,i_s^2}$$

with i_s being the radius of gyration of the reinforcements. The values of β and i_s are shown in table 43.5.1 for the most common reinforcement configurations.

Table 43.5.1

Reinforcement configuration	i_s^2	β
	$\frac{1}{4}(d-d')^2$	1.0
	$\frac{1}{12}(d-d')^2$	3.0
	$\frac{1}{6}(d-d')^2$	1.5
	$\frac{1}{8}(d-d')^2$	2.0

43.5.2 Approximate method. Biaxial combined bending

A separate verification may be carried out on rectangular cross-section elements constant reinforcement, along the two main planes of symmetry if the eccentricity of the axial load is located in the shaded area in figure 43.5.2.a. This situation obtains if any of the two conditions set out in figure 43.5.2.a, are satisfied, in which e_x and e_y are the design eccentricities in the direction of the x and y axes respectively.

If the conditions above are not satisfied, the support shall be deemed to be buckle-resistant, if it satisfies the following condition:

$$\frac{M_{xd}}{M_{xu}} + \frac{M_{yd}}{M_{yu}} \leq 1$$

In which:

M_{xd} is the design moment in direction x, in the critical verification section, taking account of the second order effects.

M_{yd} is the design moment in direction y, in the critical verification section, taking account of the second order effects.

M_{xu} is the maximum moment in direction x, resisted by the critical section.

M_{yu} is the maximum moment in direction y, resisted by the critical section.

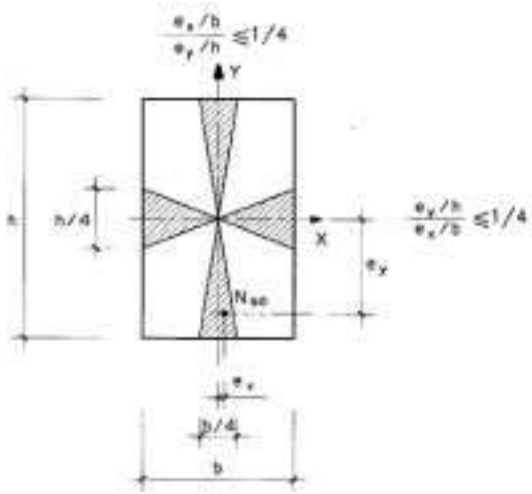

Figure 43.5.2.a

Article 44. Limit State of Failure due to shear

44.1 General considerations

When analysing the bearing capacity of concrete structures with regards to shear stresses, the general design strut-and-tie method (Articles 24 and 40) shall be used on all structural members or their parts which have planes states of stress, or similar, and which are subjected to shear actions along a known plane and which are not special cases explicitly covered by this Code, such as linear members, plates, slabs, including one-way slabs and similar structures (44.2).

44.2 Shear strength of linear members, plates, and slabs, including one-way slabs and similar structures

The requirements in the various sub paragraphs shall solely apply to linear members subjected to combined bending, shear and axial forces (in compression or tension) and to plates, slabs including basically one-way slabs.

For the purposes of this article, linear members shall be members whose distance between points of zero moment is at least twice their total depth, and whose width is no more than five times this depth, and with their main axes being straight or curved. Flat surface elements with a solid or hollow sections loaded perpendicular to their centre plane are called plates or slabs.

44.2.1 Definition of design section

For design at the Limit State of Failure due to shear stresses, sections should be considered with their actual dimensions during the phase being analysed. Except where indicated otherwise, the resistant concrete section is obtained from the actual dimensions of the member, with the criteria of 40.3.5 being met.

If the web width in the section considered is not constant, the smallest width in the section at a height equal to three quarters of the effective depth calculated from the tensioning reinforcement (figure 44.2.1.a) shall be adopted for b_0.

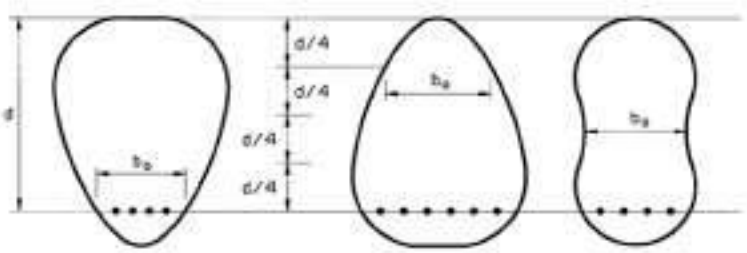

Figure 44.2.1.a

44.2.2 Effective shear force

Verifications at the Limit State of Failure due to shear may be carried out based on the effective shear stress V_{rd} obtained from the following expression:

$$V_{rd} = V_d + V_{pd} + V_{cd}$$

in which:

V_d Design value of the shear force produced by external actions.

V_{pd} Design value of the force component of the pre-stressing tendons parallel to the section under study.

V_{cd} Design value of the component parallel to the section of the resultant normal tensions, both compression and traction the passive reinforcement, on the longitudinal concrete fibres, in members with variable depth.

44.2.3 Compulsory verifications

The Limit State of Failure due to shear will be reached when either the compressive strength of the web or its tensile strength is exhausted. It is consequently necessary to verify that both the following conditions are simultaneously satisfied

$$V_{rd} \leq V_{u1}$$
$$V_{rd} \leq V_{u2}$$

in which:

V_{rt} Design value of the effective shear force in 44.2.2.
V_{u1} Ultimate shear force failure due to diagonal compression in the web..
V_{u2} Ultim

Verification of failure due to diagonal compression in the web ate shear force failure due to tension in the web $V_{rd} \leq V_{u1}$ shall be conducted at the edge of the support and not at its axis.

In members without any shear reinforcement, failure due to diagonal compression will not need to be verified.

Verification of failure due to tension in the web $V_{rd} \leq V_{u2}$ shall be carried out on a section located at a distance of one effective depth from the edge of the direct support., apart from in the case of members without any shear reinforcements in regions which do not crack in flexion, when the provisions in 44.2.3.2.1.a shall apply.

44.2.3.1 Obtaining V_{u1}

Shear stress at failure due to diagonal compression in the web shall be calculated from the following expression:

$$V_{u1} = K\ f_{1cd}\ b_0\ d\ \frac{cotg\ \theta\ +\ cotg\ \alpha}{1\ +\ cotg^2\ \theta}$$

in which:

f_{1cd} The concrete's compression strength.

$f_{lcd} = 0.60\ f_{cd}$ for $f_{ck} \leq 60$ N/mm²
$f_{lcd} = (0.90 - f_{ck}/200)\ f_{cd} \geq 0.50\ f_{cd}$ for $f_{ck} > 60$ N/mm²

b_0 Net minimum width of the member defined in accordance with 40.3.5.

K Coefficient which depends on the axial force.

$K = 1.00$ In the case of non-pre-stressed structures or structures without any axial compression force.

$K = 1 + \frac{\sigma'_{cd}}{f_{cd}}$ for $0 < \sigma'_{cd} \leq 0.25\ f_{cd}$

$K = 1.25$ for $0.25\ f_{cd} < \sigma'_{cd} \leq 0.50\ f_{cd}$

$K = 2.5\left(1 - \frac{\sigma'_{cd}}{f_{cd}}\right)$ for $0.50\ f_{cd} < \sigma'_{cd} \leq 1.00\ f_{cd}$

In which:

σ'_{cd} Effective axial tension in the concrete (positive compression), which in columns shall be calculated bearing in mind the compression absorbed by the compressed reinforcements.

$$\sigma'_{cd} = \frac{N_d - A_{s'}\ f_{yd}}{A_c}$$

N_d Design value of the axial force (positive compression) including pre-stressing with its design value.

A_c Total concrete cross section area.

A_s' Total area of compressed reinforcement. In combined compression, it may be assumed that the entire reinforcement is subject to the tension f_{yd}.

f_{yd} Design strength of reinforcement A_s' (paragraph 40.2).

- In the case of passive reinforcements: $f_{yd} = \sigma_{sd}$
- In the case of active reinforcements: $f_{yd} = \sigma_{pd}$

α Angle between the reinforcements and the member's axis *(figure 44.2.3.1).*

θ Angle between the compression struts in the concrete and the member's axis (figure 44.2.3.1). A value which satisfies the following shall be adopted:

$$0.5 \leq \cot g\ \theta \leq 2.0$$

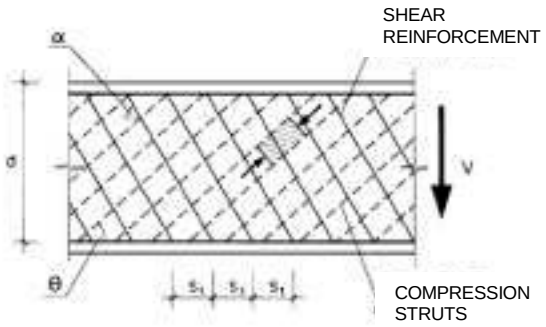

Figure 44.2.3.1

44.2.3.2 Obtaining V_{u2}

44.2.3.2.1 Members without any shear reinforcement

44.2.3.2.1.1 Members without any shear reinforcement in non-cracked regions (Md ≤ Mfis,d)

The shear strength of members with non-cracked regions and compressed webs shall be restricted according to the concrete's tensile strength, and shall be equal to:

$$V_{u2} = \frac{I \cdot b_0}{S}\sqrt{\left(f_{ct,d}\right)^2 + \alpha_l \sigma'_{cd}\ f_{ct,d}}$$

in which :

M_d Design moment of the section.

$M_{fis,d}$ Cracking moment of the section calculated using $f_{ct,d} = f_{ct,k}/\gamma_c$.

I Moment of inertia of the transverse section.

$b0$ Width of the web according to sub-paragraph 44.2.1.

S Static moment of the transverse section.

$f_{ct.d}$ Design value of the concrete's tensile strength.

σ'_{cd} Mean compression tension in the concrete due to pre-stressing force.

α_l $= l/(1.2\ l_{bd}) \leq 1$ in the case of pre-stressing tendons.
= 1 in the case of other types of bonded pre-stressing elements.

l_x Distance in mm of the section concerned from the start of the length of transfer .

l_{bpt} Length of transfer of the active pre-stressing reinforcement in mm, which may be adopted according to sub paragraph 70.2.3.
$l_{bpt} = \phi\ \sigma_p\ /\ 21$

In which:

σ_p Pre-stressing tension, after losses, in N/mm²
ϕ Diameter of the active reinforcement in mm.

This verification shall be undertaken on a section located a distance away from the edge of the support which corresponds with the intersection of the longitudinal axis passing through the centre of gravity of the section with a line at an angle of 45. starting from the edge of the support.

When determining whether the section in members comprising pre-cast elements and in situ concrete is cracked or not in flexure, (calculation of M_d and $M_{fis,d}$) its various constructional phases shall be taken into consideration; the acting loads and resistant sections shall be taken into consideration at each of these phases and the tensions corresponding to each phase superimposed.

In one-way slabs comprising pre-cast, pre-stressed joists with in situ concrete forming the other ribs and compression flange, webs are not compressed by the pre-stressing of the joists, or in any case, compression is greatly reduced and transmitted over time by creep. The ultimate shear force resisted shall therefore be the larger of the figures obtained on the basis of this article, considering the pre-stressed joists in isolation or using shear verification according to sub-paragraph 44.2.3.2.1.2.

44.2.3.2.1.2 Members without shear reinforcement in regions cracked in flexure (Md > $M_{fis.d}$)

Ultimate shear force failure due to tensile force in the web in conventional and high strength concrete members shall be:

$$V_{u2} = \left[\frac{0{,}18}{\gamma_c} \xi (100 \rho_1 f_{cv})^{1/3} + 0{,}15 \sigma'_{cd} \right] b_0 d$$

With a minimum value of:

$$V_{u2} = \left[\frac{0{,}075}{\gamma_c} \xi^{3/2} f_{cv}^{1/2} + 0{,}15 \sigma'_{cd} \right] b_0 d$$

in which :

f_{CV} Effective shear strength of the concrete in N/mm² with a value of f_{cv} = f_{ck} with f_{cv} not more than 15 N/mm² in the case of reduced concrete control, with f_{ck} being the concrete's compression strength, which, for the purposes of this paragraph, shall be considered not to exceed 60 N/mm².

$$\xi = \left(1 + \sqrt{\frac{200}{d}} \right) \leq 2.0 \text{ with } d \text{ in mm.}$$

d Effective depth of the cross-section with reference to the longitudinal bending reinforcement, provided that this is capable of withstanding the increase in tensile stress produced by the shear-flexure interaction (see paragraph 44.2.3.4.2).

σ'_{cd} Mean axial tension in the web of the section (positive compression).

$$\sigma'_{cd} = \frac{N_d}{A_c} < 0{,}30 f_{cd} \not> 12\text{MPa}$$

N_d Design value of the axial force including the pre-stressing force present in the section considered. a linear variation in the pre-stressing force may be considered in members with pre-tensioned reinforcements, from the end of

the member as far as a distance equal to 1.2 times the transfer length l_{bpt}, (see 44.2.3.2.1.1). On internal supports of continuous structural with active passing reinforcement, the contribution of the pre-stressing axial force shall be disregarded when calculating N_d.

ρ_1 Geometric ratio of the main longitudinal tensioning reinforcement, whether, bonded passive or active reinforcement, anchored at least a distance, *d*, away from the section considered.

$$\rho_l = \frac{A_s + A_p}{b_0 \ d} \leq 0{,}02$$

In the case of slabs with pre-cast pre-stressed joists, the ultimate shear force failure due to tensile force in the web shall be less than the values obtained by considering on the one hand the minimum width of the pre-stressed rib and, on the other hand, the smallest width of the in situ concrete above the joist, bearing in mind that the resisted shear V_{u2} shall be more than the minimum value set out in this article.

In the first case, the design value of the concrete's compressive strength shall be deemed to be that of the pre-stressed joist, the tension, σ'_{cd} shall refer to the area of the joist and the geometric ratio of the reinforcement shall refer to a reference cross-section of width b_0 and a depth *d,* with b_0 being the minimum width of the rib, and *d,* the effective depth of the slab.

In the second case, the compressive strength of the in situ concrete shall be considered to be the concrete's compressive strength, the tension σ'_{cd} shall be deemed to be zero, and the geometric ratio of the reinforcement shall refer to a cross-section of width b_0 and a depth *d,* with b_0 being the minimum width of the rib in the zone of the in situ cast concrete above the beam.

In one-way slabs comprising basic lattice reinforcement, the contribution of the lattice may be considered (in accordance with sub-paragraph 44.2.3.2.2), when verifying the shear force using the smallest width underneath the fibre corresponding to a depth of at least 20 mm below the lattice's upper round bar, as the rib width. Similarly, the rib shall be verified without the contribution of the lattice, using the rib's smaller width, between 20 mm below the lattice's upper round bar and the upper face of the slab (Figure 44.2.1.b).

44.2.3.2.2 Members with shear reinforcement

Ultimate shear force failure due to tensile force in the web shall be equivalent to:

$$V_{u2} = V_{cu} + V_{su}$$

In which:

V_{su} Contribution of the web's transverse reinforcement to shear strength.

$$V_{su} = z \ sen \ \alpha \ (cotg \ \alpha + cotg \ \theta \ ) \Sigma A_a \ f_{y\alpha d}$$

In which:

A_α Area per unit length of each set of reinforcements forming an angle α with the main axis of the member (figure 44.2.3.1)

$f_{y\alpha.d}$ Design strength of the reinforcement A_α (paragraph 40.2).

- In the case of passive reinforcements: $f_{yd} = \sigma'_{sd}$
- In the case of active reinforcements: $f_{pyd} = \sigma'_{pd}$

θ Angle between the concrete's compression struts and the axis of the member (figure 44.2.3.1). The same value as that for verifying shear force failure due to diagonal compression in the web (paragraph 44.2.3.1) shall be adopted. It shall satisfy the following:

$$0.5 \leq cotg \ \theta \leq 2.0$$

α Angle of the reinforcements with the member's axis (figure 44.2.3.1).

z Mechanic lever arm. In pure bending and in the absence of more accurate calculations, the approximate value of $z = 0.9d$ may be adopted. In the case of in circular sections stressed in flexure, *d* may be considered to be *0.8 h.* In circular sections stressed in flexural compression, ***z*** may be approximately:

$$z = \frac{M_d + N_d z_0 - U_s^{'}(d - d')}{N_d + U_s - U_s^{'}} \begin{cases} > 0 \\ \not> 0.9d \end{cases},$$

in which:

z_0	Distance from the tensioned reinforcement as far as the application point of the axial force.
d, d'	Distance from the most compressed fibre in the concrete as far as the centre of gravity of the tensioned and compressed reinforcement respectively.
$U_s = A_s f_{yd}$	Mechanical strength of the tensioning reinforcement.
$U'_s = A'_s f_{yd}$	Mechanical strength of the compression reinforcement.

For combined flexure and tension, 0.9d may be adopted for z.

The value of V_{su} in members reinforced with circular hoops, shall be multiplied by a factor of 0.85 to take account of the loss of efficiency of the shear reinforcement due to the transverse inclination of its constituent elements.

V_{cu} Contribution of the concrete to shear strength,

$$V_{cu} = \left[\frac{0,15}{\gamma_C} \xi (100 \rho_l f_{cv})^{1/3} + 0,15 \alpha_l \sigma'_{cd} \right] \beta b_0 d$$

In which:

f_{cv} Effective shear strength of the concrete in N/mm^2 with a value of $f_{cv} = f_{ck}$ with f_{cv} not exceeding 15 N/mm^2 in the case of reduced concrete inspection.

f_{ck} Compression strength of the concrete in N/mm^2. Values of f_{ck} of up to 100 N/mm^2 shall be adopted.

and in which:

$$\beta = \frac{2 \cot g\ \theta - 1}{2 \cot g\ \theta_e - 1} \qquad si\ 0,5 \leq \cot g \theta < \cot g\ \theta_e$$

$$\beta = \frac{\cot g\ \theta - 2}{\cot g\ \theta_e - 2} \qquad si\ \cot g\ \theta_e \leq \cot g\ \theta \leq 2,0$$

θ_e Reference angle of inclination of cracks, for which either of the following two values may be adopted:

a) Simplified method. θ_e is the angle corresponding to the inclination of the cracks in the web of the member at the time of cracking, calculated from the following expression:

$$\cot g\ \theta_e = \frac{\sqrt{f_{ct,m}^2 - f_{ct,m}(\sigma_{xd} + \sigma_{yd}) + \sigma_{xd}\sigma_{yd}}}{f_{ct,m} - \sigma_{yd}} \qquad \begin{cases} \geq 0,5 \\ \leq 2,0 \end{cases}$$

$f_{ct,m}$	Mean tensile strength of the concrete (paragraph 39.1).
σ_{xd} σ_{yd}	Design values of normal tensions at the centre of gravity of the section parallel to the main axis of the member and at shear stress V_d respectively. The tensions σ_{xd} and σ_{yd} shall be obtained from the design actions, including the pre-stressing tensions in accordance with the theory of elasticity and

assuming non-cracked concrete and considering the tensile stresses to be positive.

b) General method. The angle θ_e in sixtieths of a degree can be obtained by considering the interaction with other Ultimate Limit States forces, whose value in degrees may be obtained from the following expression:

$$\theta_e = 29 + 7\varepsilon_x$$

in which:

ε_x Longitudinal strain in the web (figure 44.2.3.2.2) expressed as so many per thousand, and obtained using the following equation:

$$\varepsilon_x \approx \frac{\frac{M_d}{z} + V_{rd} - 0{,}5N_d - A_p\sigma_{p0}}{2\left(E_s A_s + E_p A_p\right)} \cdot 1000 \not< 0$$

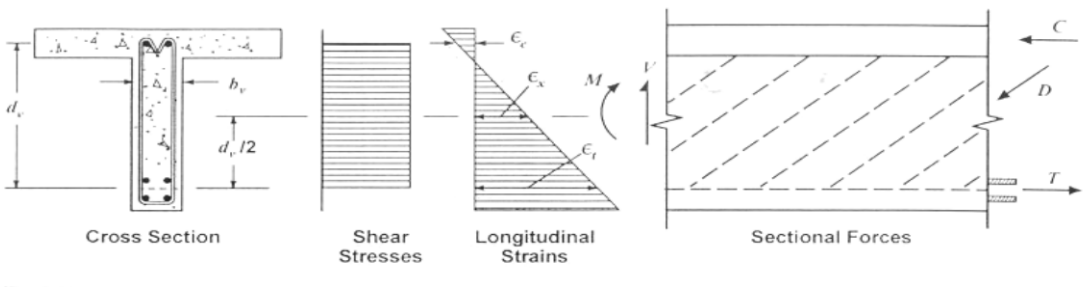

Figure 44.2.3.2.2

σ_{P0} Tension in the pre-stressing tendons, when the surrounding concrete's strain is 0.

The following considerations shall be taken into account when calculating the value of the longitudinal strain in the web, ε_x,:

a) V_{rd} *and* M_d shall be taken as positive, and M_d shall be taken to be not less than z-V_{rd}.
b) N_d shall be deemed to be positive compression.
c) The values of A_s and A_p are those of the reinforcement anchored in the section considered. If this is not the case, it shall be reduced in proportion to its anchorage length shortfall.
d) If tensile stress can produce cracking in the compressed flange, the value of ε_x obtained in the equation shall be doubled.

44.2.3.3 Special load cases

When a beam is subjected to a hanging load applied at a level whereby it lies outside the compression flange of the beam, suitable transverse reinforcement and suspension reinforcement shall be arranged and suitable anchored in order to transfer the corresponding load to the compression flange.

Additionally, the end zones of pre-stressed members, especially in case of pre-tensioned active reinforcements anchored by bonding, it will be necessary to examine the progressive transfer of the pre-stressing force to the member, by assessing this force in each section..

44.2.3.4 Arrangements for reinforcements

44.2.3.4.1 Transverse reinforcements

The longitudinal distance s_t between transverse reinforcements (figure 44.2.3.1) shall satisfy the following conditions, in order to ensure suitable confinement of the concrete subjected to diagonal compression:

$s_t \leq 0.75\, d\, (1+\text{cotg}\alpha) \leq 600$ mm *if* $V_{rd} \leq \frac{1}{5} V_{ul}$

$s_t \leq 0.60\, d\, (1+\text{cotg}\alpha) \leq 450$ mm *if* $\frac{1}{5} V_{ul} < V_{rd} \leq \frac{2}{3} V_{ul}$

$s_t \leq 0.30\, d\, (1+\text{cotg}\alpha) \leq 300$ mm *if* $V_{rd} > \frac{2}{3} V_{ul}$

In bent bars this spacing shall never exceed the value of 0.6 d (1+cotα). The transverse spacing $s_{t,trans}$ between transverse reinforcements shall satisfy the following condition:

$$s_{t,trans} \leq d \leq 500 \text{ mm}$$

If there is compression reinforcement present and this is taken into consideration in the calculation, hoops or stirrups shall also satisfy the requirements in Article 42.

In general, the linear elements shall include cross-sectional reinforcement in an effective manner.

Hoops and stirrups shall also be extended for a length that is equal to half the depth of the member beyond the section in which they theoretically cease to be necessary. Hoops and stirrups in supports shall be arranged close to their edges.

Shear reinforcements shall form an angle with the axis of the beam of between 45. and 90., sloping in the same direction as the main tensile stress produced by external loads at the centre of gravity of the section of the beam which is assumed to be not cracked.

Bars forming transverse reinforcement may be active or passive and both types can be arranged in an isolated or combined manner. Their minimum reinforcement ratio shall satisfy the following:

$$\sum \frac{A_\alpha\, f_{y\alpha,d}}{sen\, \alpha} \geq \frac{f_{ct,m}}{7{,}5}\, b_0$$

At least one third of the shear reinforcement necessary and in every case, the minimum ratio indicated shall be installed in the form of stirrups forming an angle of 90. with the centre line of the beam. However, in ribbed one-way slabs with a depth not exceeding 40 cm, basic lattice reinforcements may be used for the shear reinforcement whenever a prefabricated footing is used or if the rib is completely concreted in situ.

44.2.3.4.2 Longitudinal reinforcements

The longitudinal reinforcements for bending shall be capable of withstanding an increase in tension on top of that produced by M_d, of:

$$\Delta T = V_{rd}\, cotg\, \theta - \frac{V_{su}}{2} (\, cotg\, \theta + cotg\, \alpha\,)$$

This specification is automatically met if the curve of design moments M_d is offset by an amount equal to:

$$s_d = z \left(cotg\, \theta - \frac{1}{2} \frac{V_{su}}{V_{rd}} (\, cotg\theta + cotg\, \alpha\,) \right)$$

in the least favourable direction. (figure 44.2.3.4.2).

If no shear reinforcement is present, V_{su} shall be taken to be 0 in the expressions above.

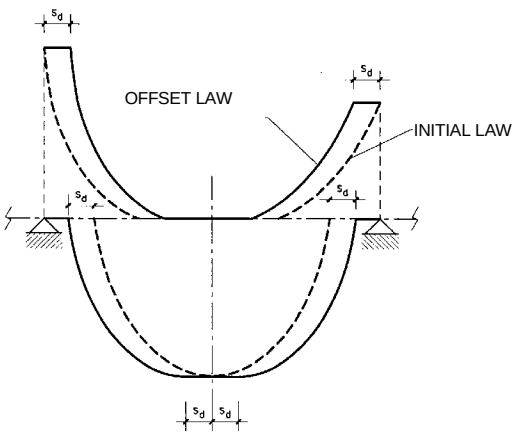

Figure 44.2.3.4.2

44.2.3.5 Longitudinal shear between the flanges and web of a beam

The strut and ties method shall be used to calculate the reinforcement connecting the flanges and the web of T-beams, I-beams and box girders and similar, (Article 40).

When determining the longitudinal shear force plastic redistribution may be assumed in a beam area of length a_r (figure 44.2.3.5.a).

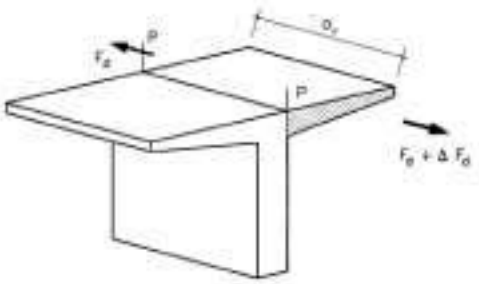

Figure 44.2.3.5.a

The mean longitudinal shear force per unit length which must be resisted shall be:

$$S_d = \frac{\Delta F_d}{a_r}$$

in which:

a_r Length of plastic redistribution concerned. The law of moments in the length, a_r shall exhibit a monotonously increasing or decreasing variation. At least the points of moment sign change shall always be adopted as zone a_r limits.

ΔF_d Variation in the distance a_r of the longitudinal shear force acting on the section of the flange outside the plane P.

In the absence of more rigorous calculations, the following shall be satisfied:

$$S_d \leq S_{u1}$$

$$S_d \leq S_{u2}$$

In which:

S_{u1} Ultimate longitudinal shear force due to diagonal compression in the plane P.

$$S_{u1} = 0.5\, f_{1cd}\, \boldsymbol{h_0}$$

In which:

f_{1cd} The concrete's compression strength (sub-paragraph 40.3.2) with a value of:

- In the case of compressed flanges:

  $f_{1cd} = 0.60\, f_{cd}$ for $f_{ck} \leq 60$ N/mm²

  $f_{1cd} = (0.90 f_{ck}/200)\, f_{cd}$ for $f_{ck} > 60$ N/mm²

- In the case of tensioned flanges:

  $f_{1cd} = 0.40\, f_{cd}$ in the case of tensioned flanges.

$\boldsymbol{h_0}$ Thickness of the flange in accordance with 40.3.5.

S_{u2} Ultimate longitudinal shear force due to tension in plane P.

$$S_{u2} = S_{su}$$

In which:

S_{su} Contribution of the reinforcement perpendicular to the plane P to the shear strength.

$$S_{su} = A_p\, f_{yp,d}$$

A_p Reinforcement per unit length perpendicular to plane P (figures 44.2.3.5. b and c).

$f_{yp,d}$ Design strength of the reinforcement A_p:

$f_{yp,d} = \sigma_{sd}$ in the case of passive reinforcements

$f_{yp,d} = \sigma_{pd}$ in the case of active reinforcements

Where there is longitudinal shear between flanges and webs, combined with transverse bending, the reinforcements necessary under both headings shall be calculated and the total of these two used; the longitudinal shear reinforcement may be reduced, bearing in mind compression due to transverse bending.

4.4.2.3.6 Vertical shear at joints in hollow core slabs

The vertical shear force per unit length in longitudinal joints in hollow core slabs comprising in situ concrete, Vd, (Figure 44.2.3.6) shall not exceed the resisted shear force Vu, calculated as being the smaller of the following values:

$$V_u = 0{,}25\left(f_{bt,d} \cdot \sum h_f + f_{ct,d} \cdot h_t\right)$$
$$V_u = 0{,}15\, f_{ct,d}\left(h + h_t\right)$$

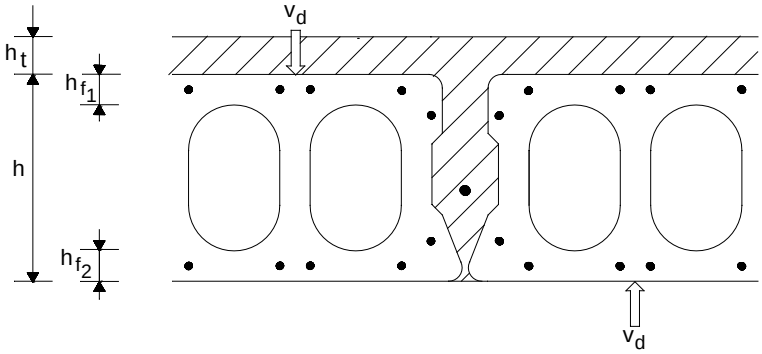

Figure 44.2.3.6 Shear force in joints of pre-stressed hollow core slabs

In which:

$f_{bt,d}$ Design tensile strength of the concrete in the precast slab.

$f_{ct,d}$ Design tensile strength of in situ concrete.

Σh_f Sum of the smaller thicknesses of the upper and lower flanges of the precast slab (figure 44.2.3.6).

h Net height of the joint.

h_t Thickness of the concrete of in situ cast upper slab.

44.2.3.7 Punching in one way slabs

The slab's puncture resistance shall be verified if large concentrated loads are to be applied,.

Slabs subjected to large concentrated loads shall be provided with an upper in situ cast slab and subjected to a special study.

The point load on the precast hollow core slab of in pre-cast hollow core slabs without any in situ cast upper slab shall not exceed:

$$V_d=b_w h(f_{ctd}+0,3\text{-}a\text{-}a_{cpm})$$

In which:

b_w Effective width, obtained from the sum of the flanges affected in accordance with figure 44.2.3.7.

h Total height of the slab.

$f_{ct,d}$ Design tensile strength of the concrete in the precast slab.

σ_{cPm} Mean tensile stress in the concrete due to the pre-stressing force.

α Coefficient equal *to* $[xl(1.2\text{-}/_{bpt})] \leq 1.$

In which:

x Distance from the section to the end.

l_{bpt} Transfer length of the active pre-stressing reinforcement (paragraph 70.2.3).

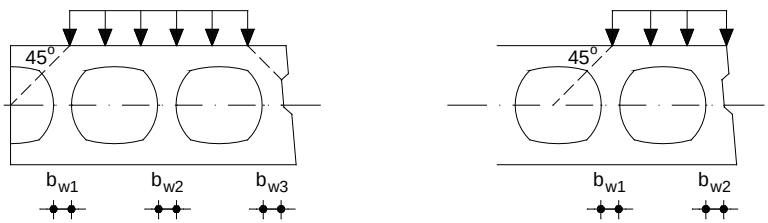

a) General situation b) Free slab edge

Figure 44.2.3.7. Effective width in pre-stressed hollow core slabs

In the case of concentrated loads of which more than 50% are acting on a free edge of the slab with a width of b_w (see figure 44.2.3.7.b), the strength value obtained from the formula is only applicable if a minimum of one wire or strand is installed in the external flange plus a

transverse passive reinforcement. If either of these two conditions is not satisfied, the strength must be divided by a factor of 2.

Plates or bars shall be fitted in the upper part of the element as the transverse passive reinforcement; they shall be at least 1.20 m long, be fully anchored and designed to resist a tensile force that is equal to the total concentrated load.

If there is a load with a width of less than half the width of the cavity on any cavity, a second strength value shall be calculated using the previous formula, but replacing *h* with the smaller thickness of the upper flange, and b_w with the width of the loaded zone. When verifying, the smaller of the strength values calculated above shall be adopted.

Article 45 Limit State of Failure due to torsion in linear elements

45.1 General considerations

The requirements in this article shall solely apply to linear elements subjected to pure torsion or the combined stresses of torsion and both shear and axial bending.

For the purposes of this article, linear elements shall be deemed to be elements whose distance between points of zero moment is at least two and a half times their total depth, and whose width is no more than four times that depth with their main axes being straight or curved.

The two-dimensional bending states (m_x, m_y and m_{xy}) in slabs and plates shall be dimensioned in accordance with Article 42, taking account of the main directions of the forces and the directions in which the reinforcement is arranged.

When the static equilibrium of a structure depends on the torsional resistance of one or more of its elements, these shall be dimensioned and verified in accordance with this article. When the static equilibrium of the structure does not depend on the torsional resistance strength of one or more of its elements, this limit state will merely need to be verified in elements whose torsional stiffness has been considered in the forces design.

45.2 Pure torsion

45.2.1 Definition of the design section

The torsional resistance of sections shall be calculated using a thin walled closed section. This means that solid sections shall be replaced by equivalent thin walled sections. Sections of complex shapes, such as T-beams, shall be divided into several sub-sections, each of which shall be modelled as an equivalent thin walled section, and their total torsional resistance shall be calculated as the sum of the resistances of the various members. Sections shall be divided in order to maximise calculated stiffness. In areas near to supports, their elements whose transmission of stresses to the support elements cannot take place directly shall be not considered as collaborating to the torsional stiffness of the section.

The effective thickness, h_e of the wall of the design section (figure 45.2.1) shall be:

$$h_e \leq \frac{A}{u} \begin{cases} \leq h_o \\ \geq 2c \end{cases}$$

in which:

A Area of the transverse section inscribed in the external circumference including inner void areas.

u External circumference of the transverse section.

h_o Actual thickness of the wall in the case of hollow sections.

c Covering of longitudinal reinforcements.

A value of h_e less than *A/u,* may be used provided that it satisfies the minimum conditions indicated, and so that the concrete compression requirements set out in 45.2.2.1 can be satisfied.

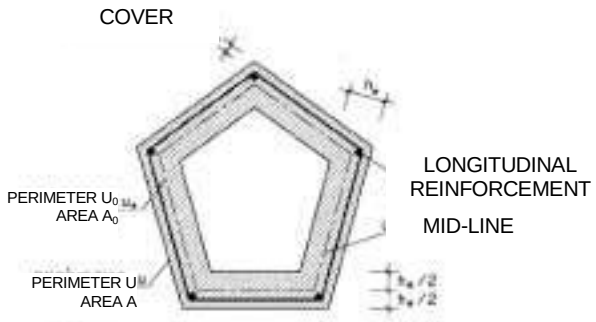

Figure 45.2.1

45.2.2 Verifications that should be performed

The Limit State of Failure due to torsion will be reached when either the compressive strength of the concrete or the tensile strength of the reinforcement arrangement is exhausted.

It is consequently necessary to verify that both the following conditions are simultaneously satisfied:

$$T_d \leq T_{u1}$$
$$T_d \leq T_{u2}$$
$$T_d \leq T_{u3}$$

In which:

T_d Design value of the torsional moment for the section.

T_{u1} Maximum torsional moment which the concrete's compressed struts can resist.

T_{u2} Maximum torsional moment which transverse reinforcements can resist.

T_{u3} Maximum torsional moment which longitudinal reinforcements can resist.

Torsional reinforcements are assumed to comprise a transverse reinforcement formed from continuous hoops, located in planes perpendicular to the member's main axis. Longitudinal reinforcements shall comprise passive or active reinforcement parallel to the member's main axis, distributed uniformly and not more than 30 cm apart on the external circumference of the effective hollow section or in a double layer in the external circumference and on the inside of the effective or actual hollow section. At least one longitudinal bar shall be located on each corner of the actual section, to ensure the transmission of the longitudinal forces exerted by the compression struts to the transverse reinforcement.

45.2.2.1 Obtaining T_{u1}

The ultimate torsional force that compressed struts can resist may be obtained from the following expression:

$$T_{u1} = 2K\alpha f_{1cd} A_e h_e \frac{cotg\,\theta}{1 + cotg^2\,\theta}$$

in which:

f_{1cd} Concrete's compression strength.

$f_{1cd} = 0.60\, f_{cd}$ for $f_{ck} \leq 60$ N/mm²

$f_{1cd} = (0.90 - f_{ck}/200)\, f_{cd} \geq 0.50\, f_{cd}$ for $f_{ck} > 60$ N/mm²

K Coefficient which depends on the axial force defined in sub-paragraph 44.2.3.1.

α 0.60 if there are stirrups only along the external circumference of the member;
0.75 if closed stirrups are installed on both faces of the wall of the equivalent hollow section or the actual hollow section.

θ Angle between the concrete's compression struts and the member's axis. The expressions in Article 44 may be used to obtain this angle. A value that is consistent with the value adopted for verifying the Ultimate Limit State of failure due to shear and which satisfies the following shall be adopted:

$$0.50 \leq cotg\ \theta \leq 2.00$$

A_e Area enclosed by the middle line of the design effective hollow section (figure 45.2.1).

45.2.2.2 Obtaining T_{u2}

The torsional stress which transverse reinforcements can resist is obtained from:

$$T_{u2} = \frac{2\ A_e\ A_t}{s_t}\ f_{y\,t,d}\ cotg\ \theta$$

in which:

A_t Area of the reinforcements used as hoops or transverse reinforcement.

s_t Longitudinal spacing between hoops or bars in the transverse reinforcement.

$f_{yt,d}$ Design strength of the reinforcement steel A_t (paragraph 40.2).

- For passive reinforcements: $f_{yt,d} = \sigma_{sd}$
- For active reinforcements: $f_{yt,d} = \sigma_{pd}$

45.2.2.3 Obtaining T_{u3}

The tensional stress which longitudinal reinforcements can resist may be calculated using:

$$T_{u3} = \frac{2\ A_e}{u_e}\ A_l\ f_{yl,d}\ tg\ \theta$$

in which:

A_1 Area of the longitudinal reinforcements.

f_{y1d} Design strength of the steel in the longitudinal reinforcements A_1 (paragraph 40.2).

- For passive reinforcements: $f_{y1,d} = \sigma_{sd}$
- For active reinforcements: $f_{y1,d} = \sigma_{pd}$

u_e Circumference of the middle line in the design effective hollow section A_e (figure 45.2.1).

45.2.2.4 Warping caused by torsion

In general, the stresses produced by the co-action of torsional warping may be disregarded in the design of linear concrete members.

45.2.3 Provisions relating to reinforcements

The longitudinal distance between torsional stirrups s_t shall not exceed:

$$s_t \leq \frac{u_e}{8}$$

and shall satisfy the following conditions to ensure suitable confinement of the concrete subjected to diagonal compression:

$$s_t \leq 0{,}75\ a\ (1+cotg\alpha) \leq a \not> 600\ \text{mm} \quad si\ T_d \leq \frac{1}{5}\ T_{u1}$$

$$s_t \leq 0{,}60\ a\ (1+cotg\alpha) \leq a \not> 450\ \text{mm} \quad si\ \frac{1}{5}\ T_{u1} < T_d \leq \frac{2}{3}\ T_{u1}$$

$s_t \leq 0{,}30\ a\ (1+\text{cotg}\alpha) \leq a \not> 300$ mm $si\ \ T_d > \frac{2}{3}\ T_{u1}$

with *a* being the smaller dimension of the sides, making up circumference u_e.

45.3 Interaction between torsion and other stresses

45.3.1 General method

The same procedure as for pure torsion (45.2.1) shall be used, in order to define a design effective hollow section. The perpendicular and tangential stresses produced by the forces acting on this section shall be calculated using the conventional elastic or plastic methods.

Once the tensions have been determined, the reinforcements necessary in any wall in the design effective hollow section may be determined using the plane tension distribution formulae. The main compressive stress in the concrete can also be determined. If the reinforcements obtained from this method are not feasible or appropriate, the tensions obtained in any zone may be replaced by a system of equivalent static forces, and these may be used in the reinforcement. In this case, the consequences that this change has in unusual areas such as hollows or beam ends shall be verified.

The main compressive stresses σ_{cd} calculated in the concrete, in the various walls of the design effective hollow section, shall satisfy:

$$\sigma_{cd} \leq 2\alpha\ f_{1cd}$$

in which α and f_{1cd} are defined in 45.2.2.1. and 40.3, respectively.

45.3.2 Simplified methods

45.3.2.1 Torsion combined with bending and axial loads.

The longitudinal reinforcements necessary for torsion and flexural compression or flexural tension shall be calculated separately, assuming that both types of load are acting independently. The reinforcements determined in this way shall be combined in accordance with the following rules:

a) In the area stressed due to combined bending, the longitudinal reinforcements for torsion shall be added to those required for bending and axial stresses.

b) In the area compressed due to combined bending, if the tensile stress generated solely by the torsional force is greater than the compressive force acting on that area due to combined bending, a longitudinal reinforcement capable of resisting this difference shall be incorporated. If this is not the case, it shall be verified whether it is necessary to incorporate a compressed longitudinal reinforcement, whose ratio may be determined using the following expression:

$$\rho_l \cdot f_{yd} = \sigma_{md} - \alpha \cdot f_{cd} \cdot \left[0.5 + \sqrt{0.25 - \left(\frac{\tau}{\alpha \cdot f_{cd}} \right)^2} \right] \geq 0$$

In which:

p_L Ratio of longitudinal reinforcement per unit length to be added in the compression zone of the effective hollow section due to the effect of the torsional moment.

$$\rho_L = \frac{\Delta A_s^{'}}{s\ h_e}$$

σ_{md} Mean compression tension in the concrete present in the compressed zone of the effective hollow section due to the design bending and axial forces (M_d, N_d) acting concomitantly with the design torsional stress (T_d)

τ Tangential torsional stress:

$$\tau = \frac{T}{2 \cdot A_e \cdot h_e}$$

A value not exceeding 400 N/mm^2 shall be adopted for the steel's design strength.

In every case, it shall be verified that $T_d \leq T_{u1}$ in accordance with sub-paragraph 45.2.2.1

45.3.2.2 Torsion combined with shear

The concomitant design torsional and shear stresses shall satisfy the following condition in order to ensure that the concrete is not subject to excessive compression:

$$\left(\frac{T_d}{T_{u1}} \right)^{\beta} + \left(\frac{V_{rd}}{V_{u1}} \right)^{\beta} \leq 1$$

in which :

$$\beta = 2\left(1 - \frac{h_e}{b} \right)$$

b Width of the element, which is the same as the total width of a solid section and the sum of the widths of webs of box type sections.

The calculations for the design of stirrups shall be undertaken separately; for torsion: in accordance with 45.2.2.2; for shear: in accordance with 44.2.3.2.2. In both calculations, the same angle θ shall be used for the compression struts. The reinforcements calculated in this way shall be added together, taking account of the fact that the torsion reinforcements shall be arranged on the outer circumference of the section, which is not compulsory for shear reinforcements.

If the section in one-way slabs comprising pre-stressed hollow core elements is subject to concomitant shear and torsional loads, the shear strength V_{u2n} shall be calculated on the basis of:

$$V_{u2n} = V_{u2} - V_{Td}$$

With

$$V_{Td} = \frac{T_d}{2b_w} \cdot \frac{\Sigma b_w}{b - b_w}$$

in which:

V_{u2n} Net value of shear strength

V_{u2} Shear strength according to sub-paragraph 44.2.3.2.

V_{Td} Increase in shear produced by the torsional moment.

T_d Design torsional moment in the section studied

b_w Width of the external web at the centre of gravity (see Figure 45.3.2.2)

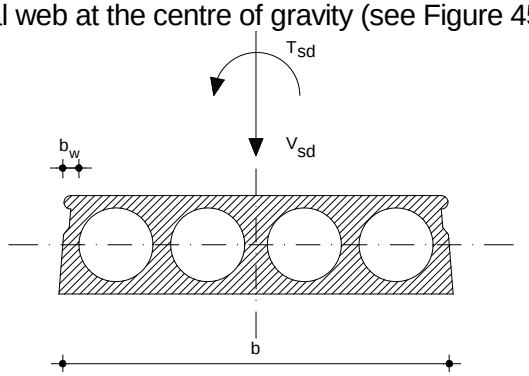

Figure 45.3.2.2. Shear and torsional load or eccentric shear

Article 46. Punching Limit State

46.1 General considerations

Resistance to transverse forces produced by concentrated loads or reactions acting on slabs without any transverse reinforcement shall be verified using a nominal tangential tension on a critical surface concentric to the loaded zone.

46.2 Critical punching shear surface

The critical surface or area is defined as a distance *2d* away from the perimeter of the loaded area or the support, with *d* being the effective depth of the slab calculated as half the sum of the effective depths corresponding to the reinforcements in two orthogonal directions.

The critical area is calculated as the product of the critical perimeter u_1 and the effective depth, *d.* The critical perimeter u_1 is determined in accordance with figures 46.2.a, 46.2.b and 46.2.c in the case of internal supports and from an edge or corner respectively.

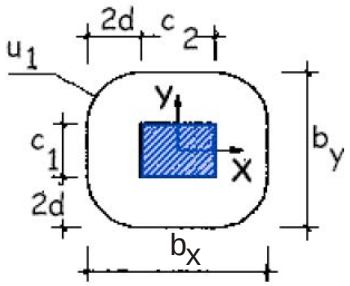

Figure 46.2.a

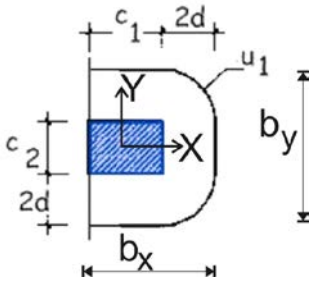

Figure 46.2.b

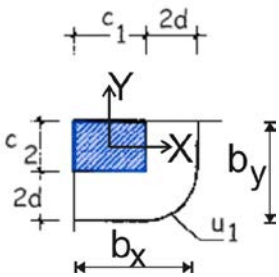

Figure 46.2.c

In other supports or loaded areas, the critical perimeter is determined on the basis of their enclosing line according to figure 46.2.d. If there are openings, hollows or lightweight elements in the slab (such as pots or blocks) located less than *6d* away, the area between the tangents on the voids marked from the centre of gravity of the column or loaded area, shall be deducted from u_1f in accordance with figure 46.2.e.

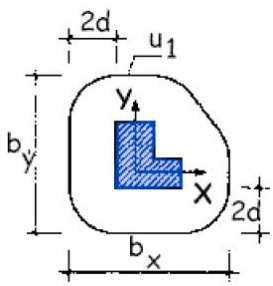

Figure 46.2.d

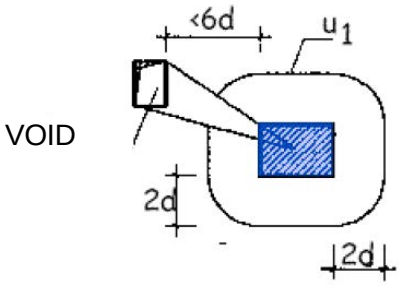

Figure 46.2.e

46.3 Slabs without any reinforcement for punching shear

No reinforcement for punching shear will be necessary if the following condition is satisfied:

$$\tau_{sd} \leq \tau_{rd}$$

In which:

τ_{sd} Design nominal tangential stress in the critical perimeter.

$$\tau_{sd} = \frac{F_{sd,ef}}{u_1 d}$$

$F_{sd.ef}$ Design effective punching shear stress, taking account of the effect of the moment transferred between the slab and the support.

$$F_{sd,ef} = \beta F_{sd}$$

β Coefficient that takes account of the effects of eccentricity of the load. If there are no moments transferred between the slab and the support, the value of 1.00 shall be adopted. In other words, where there are moments transferred between the slab and the supports, β may be adopted as being 1.15 in internal supports, 1.40 on edge supports, and 1.50 on corner supports.

F_{sd} Design punching shear . This shall be obtained as the support reaction, with external loads and the equivalent pre-stressing forces in the direction opposite to this reaction, which act on the perimeter located *h/2* away from the section of the support or loaded area, being able to be deducted.

u_1 Critical perimeter defined in figures 46.2.a, 46.2.b, 46.2.c, 46.2.d, 46.2.e.

d Effective depth of the slab.

τ_{rd} Maximum tension resistance in the critical perimeter:

$$\tau_{rd} = \frac{0{,}18}{\gamma_c} \xi \left(100\, \rho_\ell\, f_{cv}\right)^{1/3} + 0{,}1 \cdot \sigma'_{cd}$$

with a minimum value of:

$$\tau_{rd} = \frac{0{,}075}{\gamma_c} \xi^{3/2} f_{cv}^{\;1/2} + 0{,}1 \cdot \sigma'_{cd}$$

f_{cv} Effective shear strength of the concrete in N/mm^2 with value $f_{cv}= f_{ck}$ with f_{cv} no more than 15 N/mm^2 in the case of reduced concrete inspection, with f_{ck} being the concrete's compressive strength, which, for the purposes of this paragraph, shall be considered not to exceed 60 N/mm^2.

p_t Geometric ratio of the slab's main longitudinal tensioning reinforcement, including any bonded active reinforcement, and calculated using:

$$\rho_\ell = \sqrt{\rho_x \rho_y} \leq 0{,}02$$

with p_x and p_y being the ratios in two perpendicular directions. The ratio to be considered in each direction is that existing in a width equal to the dimension of the support plus *3d* on either side of the support, or as far as the edge of the slab, in the case of an edge or corner support.

$\xi = 1 + \sqrt{\frac{200}{d}} \leq 2{,}0$ with *d* in mm

σ'_{cd} Mean axial tension in the critical surface being verified (positive compression). This shall be calculated as the mean of the tensions in the two directions σ'_{cdx} and σ'_{cdy}.

$$\sigma'_{cd} = \frac{\left(\sigma'_{cdx} + \sigma'_{cdy}\right)}{2} < 0{,}30 \cdot f_{cd} \not> 12\ N/mm^2$$

$$\sigma'_{cdx} = \frac{N_{d,x}}{A_x}\ ;\ \sigma'_{cdy} = \frac{N_{d,y}}{A_y}$$

When σ'_{cd} is obtained from pre-stressing, this shall be calculated bearing in mind the pre-stressing force that actually reaches the critical perimeter, and considering the co-actions applied to the deformation in the slab by vertical elements.

$N_{d,x}$,$N_{d,y}$ Longitudinal forces at the critical surface emanating from a load or pre-stressing.
A_x, A_y Surface areas defined by sides b_x and b_y in accordance with sub-paragraph 46.2.

$$A_x = b_x \cdot h \quad \text{and} \quad A_y = b_y \; h$$

46.4 Slabs with reinforcement for punching shear

When reinforcement for punching shear is necessary, three verifications shall be carried out: one in the area with transverse reinforcements in accordance with 46.4.1, one in the zone outside the punching shear reinforcement according to 46.4.2, and one in the zone adjacent to the support or load in accordance with 46.4.3.

46.4.1 Zone comprising transverse punching shear reinforcement

Vertical stirrups or bars bent to an angle of α,shall be incorporated in the area comprising punching shear reinforcements and calculated so that the following equation is satisfied:

$$\tau_{sd} \leq 0{,}75\tau_{rd} + 1{,}5 \cdot \frac{A_{sw} f_{y\alpha,d} \operatorname{sen} \alpha}{\mathrm{s} \cdot \mathrm{u}_1}$$

in which:

r_{sd} Design nominal tangential stress according to 46.3.
r_{rd} Tensile strength in the critical perimeter obtained using the expression of 46.3, but using the actual value of f_{ck}.
A_{sw} Total area of punching shear reinforcement in a perimeter concentric with the support or loading area, in mm^2.
s Distance in a radial direction between two concentric reinforcement perimeters. (figure 46.5.a), in mm or between the perimeter and the face of the support, if there is only one.
$f_{y\alpha,d}$ `Design strength of the reinforcement A_a in N/mm^2, not exceeding 400 N/mm^2.

46.4.2 Zone outside punching shear reinforcement

Verification will need to be carried out that no reinforcement is needed in the zone outside the punching shear reinforcement.

$$F_{sd,ef} \leq \left(\frac{0{,}18}{\gamma_c} \xi \left(100 \rho_\ell \; f_{ck}\right)^{1/3} + 0{,}1\sigma'_{cd} \right) u_{n,ef} \cdot d$$

in which:

$u_{n,ef}$ Perimeter defined in figure 46.5.1.
p_ℓ Geometric ratio of longitudinal reinforcement intersecting perimeter $u_{n,ef}$ calculated, as indicated in 46.3.
f_{ck} The compressive strength of the concrete in N/mm^2. For calculation purposes no value exceeding 60 N/mm^2 shall be adopted.
σ'_{cd} Mean axial stress in the perimeter u_n,*ef*, calculated in the same manner as in 46.3, and adopting for $N_{d,x}$, $N_{d,and}$ the value of the longitudinal forces in that perimeter, due to a load or pre-stressing.
A_x, A_y Surface areas defined by sides b_x and b_y in accordance with figure 46.5.a:

$$A_x = b_x \cdot h \quad \text{and} \quad A_y = b_y \; h$$

At the distance where this condition can be verified, it shall be assumed that the effect of the moment transferred between the support and the slab by tangential stresses has disappeared, so that $F_{sd,ef}$ shall be calculated, using β = 1, in accordance with sub-paragraph 46.3.

46.4.3 Zone adjacent to support or load

It shall be verified that the maximum punching shear satisfies the following limitation:

$$\frac{F_{sd,ef}}{u_0\, d} \leq 0{,}5\, f_{1cd}$$

in which:

f_{1cd} Compressive strength of the concrete.

$f_{1cd} = 0.60\, f_{cd}$ for $f_{ck} \leq 60$ N/mm²

$f_{1cd} = (0.90 - f_{ck}/200)\ \ f_{ck} \geq 0.50\, f_{ck}$ for $f_{ck} > 60$ N/mm²

u_0 Verifying perimeter (figure 46.4.3):

- In internal supports, u_0 is the perimeter of the support's transverse section.
- In edge supports:

$$u_0 = c_1 + 3d \leq c_1 + 2_{c2}$$

in which c_1 and c_2 are the dimensions of the support.

- In corner supports:

$$u_0 = 3d \leq c_1 + c_2$$

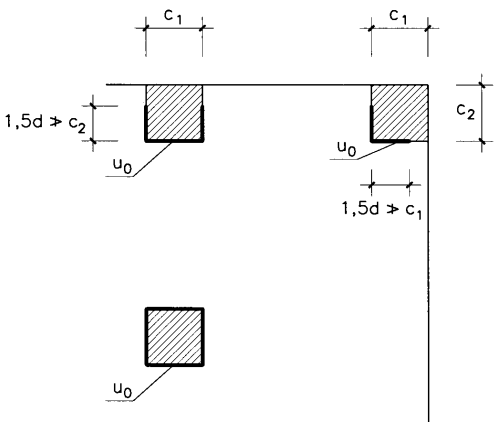

Figure 46.4.3. Critical perimeter u_0

When calculating $F_{sd,ef}$ based on F_{sd}, the values of β set out in 46.3 shall be adopted.

46.5 Provisions relating to reinforcements

The punching shear reinforcement shall be defined in accordance with the following criteria:

- The punching shear reinforcement shall comprise hoops, vertical shear assemblies or bent bars.
- The constructive configurations in plan shall satisfy the specifications in figure 46.5.a.
- The constructive configurations in elevation shall satisfy the specifications in figure 46.5.b.
- The punching shear reinforcement shall be anchored from the centre of gravity of the compressed block and underneath the longitudinal tensioning reinforcement. The anchorage of the punching shear reinforcement shall be carefully examined especially in thin slabs.

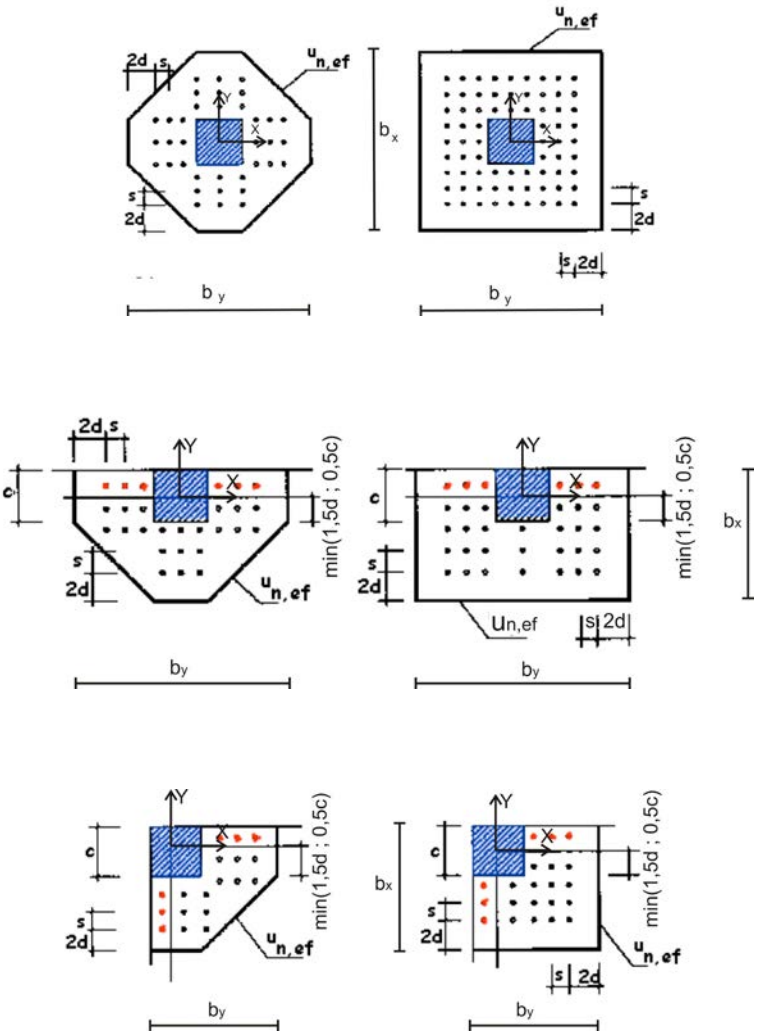

Figure 46.5 a. Plan view of types of punching shear reinforcement. The darker areas indicate the reinforcement necessary. The lighter areas indicate additional reinforcement.

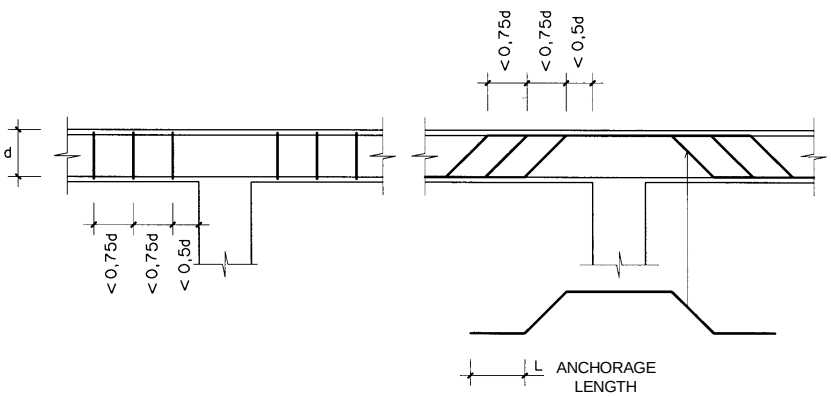

Figure 46.5. b. Elevation of the types of punching shear reinforcement

Article 47. Limit State of Failure due to longitudinal shear forces at joints between concretes

47.1 General

The Limit State dealt with in this article is that caused by the longitudinal shear stress produced by the tangential action to which a joint between concretes is subjected.

The design longitudinal shear stress, $\tau r,d$ shall be calculated on the basis of the variation in the sum of the blocks of perpendicular stresses along the element in tension ΔT or compression ΔC. This variation along the member shall be calculated in sections corresponding to one effective depth at the height of the contact surface. In order to obtain the design longitudinal shear stress, the variation in the sum of the blocks (ΔC or ΔT) shall be uniformly distributed on the contact surface corresponding to the perimeter p and a length which is the same as the effective depth of the member d:

$$\tau_{r,d} = \frac{\Delta C \text{ ó } \Delta T}{p\ d}$$

The greater value of *d* and *0.8-h* shall be adopted as the design length in pre-stressed members.

47.2 Longitudinal shear stress resistance at joints between concretes

Verifying the ultimate limit state due to longitudinal shear stress shall be verified by:

$$\tau_{r,d} \leq \tau_{r,u}$$

with:

$\tau_{r,u}$ Failure due to longitudinal shear stress corresponding to the ultimate limit state for longitudinal shear strength, according to the information indicated below and assuming that the minimum mean thickness of the concrete on either side of the joint is 50 mm measured perpendicularly to the plane of the joint and with a minimum thickness of 30 mm being permitted locally.

47.2.1 Sections without any transverse reinforcement

The ultimate longitudinal shear stress, $\tau_{r,u}$ shall have the following value:

$$\tau_{r,u} = \beta\left(1{,}30 - 0{,}30\frac{f_{ck}}{25}\right)f_{ctd} \not< 0{,}70\beta f_{ctd}$$

in which:

β Factor assigned the following values:

0.80 in rough contact surfaces of composite sections that are interconnected so that one composite section may not overhang the other, for example, are dovetailed, and if the surface is open and rough, e.g. like joists as left by a floor laying machine.

0.40 in intentionally rough surfaces with a high degree of roughness.

0.20 in unintentionally rough surfaces with a low degree of roughness.

$f_c k$ Characteristic compressive strength of the weakest concrete in the joint.
$f_{ct,d}$ Design tensile strength of the weakest concrete in the joint.

The values for the contribution from cohesion between concrete members, β *(l.30-0.30* f_{ck}*/25)* $f_{ct,d}$ at low fatigue or dynamic stresses shall be reduced by 50%.

Where tensions perpendicular to the contact surface obtain (for example, loads hanging from the bottom face of a composite beam) the contribution from the cohesion between concrete members shall be considered to be zero. ($\beta f_{ct,d} = 0$).

47.2.2 Sections with transverse reinforcement

47.2.2.1 Sections with $\tau_{r,d} \leq 2{,}5\beta\left(1{,}30 - 0{,}30\frac{f_{ck}}{25}\right)f_{ctd}$

The ultimate longitudinal shear stress $\tau_{r,u}$ shall have the following value:

$$\tau_{r,u} = \beta\left(1{,}30 - 0{,}30\frac{f_{ck}}{25}\right)f_{ct,d} + \left(\frac{A_{st}}{sp}f_{y\alpha,d}(\mu\, sen\alpha + \cos\alpha) + \mu\,\sigma_{cd}\right) \leq 0{,}25\, f_{cd}$$

in which:

f_{ck} Characteristic compressive strength of the weakest concrete in the joint.
$f_{ct,d}$ Design tensile strength of the weakest concrete in the joint.
A_{st} Cross-section of effectively anchored steel bars, closing the joint.
s Distance between the closing bars along the joint plane.
p Contact surface per unit length. This shall not extend to zones where the penetrating width is less than 20 mm or the maximum diameter of the edge or with a cover of less than 30 mm.
$f_{y\alpha,d}$ Design strength of transverse reinforcements in N/mm^2 ($\not>$ 400N/mm^2).
α Angle formed by the joining bars with the plane of the joint. Reinforcements with α > 135° or α < 45° shall not be incorporated.
σ_{cd} External design tensile stress perpendicular to the plane of the joint.
σ_{cd} > 0 for compression tensions. (If σ_{cd} < 0, β $f_{ct,d}$ = 0).

The values for the contribution from cohesion between concrete members, β *(l.30-0.30* f_{ck}*/25)* $f_{ct,d}$ at low fatigue or dynamic stresses shall be reduced by 50%.

Where tensile stresses perpendicular to the contact surface obtain (for example suspended loads on the lower base of a composite beam, the contribution from cohesion between concrete members shall be considered to be zero. ($\beta f_{ct,d} = 0$).

47.2.2.2 Sections with $\tau_{r,d} > 2{,}5\beta\left(1{,}30 - 0{,}30\frac{f_{ck}}{25}\right)f_{ctd}$

The ultimate longitudinal shear stress τ_{ru} shall have the following value:

$$\tau_{r,u} = \left(\frac{A_{st}}{sp}f_{y\alpha,d}(\mu\, sen\alpha + \cos\alpha) + \mu\,\sigma_{cd}\right) \leq 0{,}25\, f_{cd}$$

Table 47.2.2.2

Values of β and μ coefficients as a function of the type of surface

		Type of surface	
		Low degree of roughness	High degree of roughness
β		0.2	0.8
μ	$\tau_{r,d} \leq 2{,}5\beta\left(1{,}30 - 0{,}30\frac{f_{ck}}{25}\right)f_{ctd}$	0.3	0.6
	$\tau_{r,d} > 2{,}5\beta\left(1{,}30 - 0{,}30\frac{f_{ck}}{25}\right)f_{ctd}$	0.6	0.9

The contribution of the joining reinforcement to the joint's longitudinal shear strength in the section considered shall only be calculated if the geometric ratio of the transverse reinforcement satisfies the following:

$$\frac{A_{st}}{sp} \geq 0{,}001$$

47.3 Provisions for reinforcements

A brittle joint is defined as a joint whose geometric connecting reinforcement ratio is less than the value indicated in paragraph 47.2 in order for the contribution of the joint reinforcement to be taken into account, and a ductile joint is one whose connecting reinforcement ratio exceeds this value.

In brittle joints, the distribution of the connecting reinforcement shall be rendered proportional to the law of shear stresses. In ductile joints the tension redistribution along the joint hypothesis may be assumed, although it is also advisable to distribute the connecting reinforcement proportionally to the law of shear stresses.

In the case of members stressed at significant dynamic loads, connecting reinforcements shall always be placed in cantilevers and the end quarters of spans.

The gaps between transverse reinforcements connecting contact surfaces shall not exceed the smaller of the following values:

- Depth of the composite section.
- Four times the smaller dimension of members forming the joint.
- 60 cm.

Connecting reinforcements in the contact zones shall be suitably anchored on both sides of the joint.

Article 48. Fatigue Limit State

48.1 Principles

It may be necessary in structural elements subjected to variable significant repeated actions to verify that the effect of these actions does not compromise their safety during the anticipated service period.

The safety of an element or a structural detail with regard to fatigue is guaranteed if it satisfies the general conditions set out in 8.1.2. The concrete and steel shall be verified separately.

It is not usually necessary to verify this Limit State in normal structures.

48.2 Compulsory verifications

48.2.1 Concrete

For fatigue purposes, the maximum compression stress values produced either by perpendicular or tangential stresses (compressed struts), due to dead and live loads caused by fatigue shall be limited.

In the case of elements subjected to shear without any transverse reinforcement, their strength due to the effect of fatigue shall also be limited.

The maximum compression tension and shear strength values shall be defined in accordance with existing experiments or, as appropriate, with the opposing criteria indicated in the technical literature.

48.2.2 Active and passive reinforcements

In the absence of more stricter criteria, based for example on the theory of mechanical fracture, the maximum tensile stress variation, $\Delta\sigma_{sf}$, due to the imposed loads caused by fatigue (13.2), shall not be less than the fatigue limit, $\Delta\sigma_d$, defined in 38.10.

CHAPTER 11

SERVICEABILITY LIMIT STATE DESIGN

Article 49. Cracking Limit State

49.1 General considerations

In the case of verifications relating to Cracking Limit State, the effects of actions comprise the tensions in the sections (σ) and the crack openings (w) that they cause, as applicable.

Generally, both σ and w are calculated from the design actions and the combinations indicated in Chapter 3 for Limit Serviceability States.

The stresses shall be obtained from the actions, as indicated in Chapter 5. The tensions, crack openings and other verifying criteria, shall be calculated in accordance with the requirements indicated in the following paragraphs.

49.2 Cracking due to perpendicular stresses

49.2.1 Appearance of compression cracks

In all persistent situations and in temporary situations with the least favourable combination of actions corresponding to the phase considered, the compressive stresses in the concrete shall satisfy the following:

$$\sigma_c \leq 0.60\, f_{ck,j}$$

in which:

σ_c Compressive stress of the concrete in the verifying situation.

$f_{ck,j}$ Assumed value in the design for characteristic strength at j days (age of the concrete and the phase considered).

49.2.2 Decompression Limit State

The calculations for the Decompression Limit State comprise verifying that under the combination of actions corresponding to the phase being studied, decompression does not occur in the concrete in any fibre in the section.

49.2.3 Cracking due to tension. Verifying criteria

The general verifying of the Cracking Limit State due to tension comprises satisfying the following inequality:

$$w_k \leq w_{max}$$

in which:

w_k Characteristic crack opening.

w_{max} Maximum crack opening defined in table 5.1.1.2.

This verification only needs to be undertaken if the stress in the most tensioned fibre exceeds the mean bending tensile strength, $f_{ctm,fl}$ in accordance with 39.1.

49.2.4 Assessment of crack width

The characteristic crack opening shall be calculated using the following expression:

$$w_k = \beta_{sm}\ \varepsilon_{sm}$$

in which:

β Coefficient which relates the mean crack opening to the characteristic value and is equal to1.3 in the case of cracking caused by indirect actions only, and 1.7 in other cases.

s_m Median crack spacing expressed in mm.

$$s_m = 2\,c + 0{,}2\,s + 0{,}4\,k_1 \frac{\phi\ A_{c,eficaz}}{A_s}$$

ε_{sm} Mean elongation of reinforcements taking account of the collaboration of the concrete between cracks.

$$\varepsilon_{sm} = \frac{\sigma_s}{E_s}\left[1 - k_2\left(\frac{\sigma_{sr}}{\sigma_s}\right)^2\right] \geq 0{,}4\,\frac{\sigma_s}{E_s}$$

c Cover of tensioned reinforcements.

s Distance between longitudinal bars. If $s > 15\,Ø$, s shall be taken to equal 15 $Ø$.
In the case of beams reinforced with end bars, s shall be taken to = b/n, with b being the width of the beam.

k_1 Coefficient representing the effect of the tension diagram in the section, with a value of:

$$k_1 = \frac{\varepsilon_1 + \varepsilon_2}{8\,\varepsilon_1}$$

in which ε_1 and ε_2 are the maximum and minimum deformations calculated in the cracked section at the limits of the tensioned zone (figure 49.2.4.a).

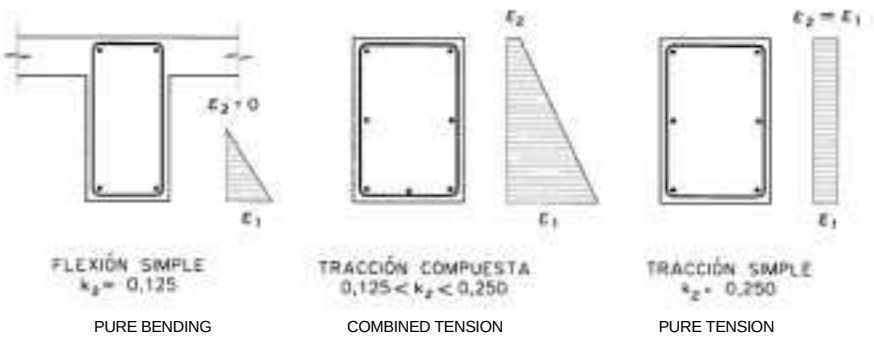

Figure 49.2.4.a

$Ø$ Diameter of the thickest tensioned bar or equivalent diameter in the case of bundled bars.

$A_{c,eficaz}$ Area of concrete of the cover zone, defined in figure 49.2.4.b, in which the tension bars effectively influence the crack opening.

A_s Total section of the reinforcements located in the area $A_{c,eficaz}$.

σ_s Service stress of the passive reinforcement in the cracked section hypothesis.

E_s Modulus of longitudinal deformation of the steel.

K_2 Coefficient of value 1.0 in the case of non-repeating temporary load and 0.5 in other cases.

σ_{sr} Stress in the reinforcement in the cracked section at the moment when the concrete cracks, which is assumed to happen when the tensile stress in the most tensioned fibre in the concrete reaches a value of $f_{ctm,fl}$ (paragraph 39.1).

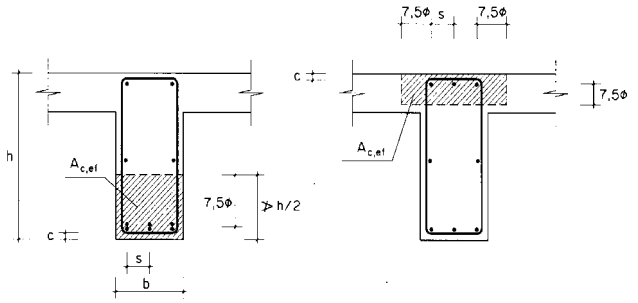

CASO 1
VIGAS CON s ≤ 15 φ

CASE 1
BEAMS WITH …S≤15 Φ

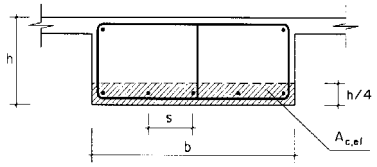

CASO 2
VIGAS CON s ≤ 15 φ

CASE 2
BEAMS WITH S≤15 Φ

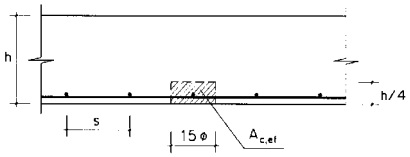

CASO 3
VIGAS PLANAS, MUROS, LOSAS CON s >15 φ

CASE 3
PLANE BEAMS, WALLS, SLABS WITH S>15 Φ

Figure 49.2.4.b

In the case of members concreted against the ground, the normal cover corresponding to the exposure class, in accordance with table 37.2.4.1.a, b, and c, may be adopted when calculating the crack width.

49.3 Limitation of cracking due to shear stress

Generally, if the criteria in Article 44, Ultimate Limit State in Shear are satisfied, cracking will be controlled in service without the need for any additional verifications.

49.4 Limitation of cracking due to torsion

Generally, if the criteria in Article 45, Ultimate Limit State in Torsion in linear elements are satisfied, cracking will be controlled in service without the need for any additional verifications.

Article 50. Deformation Limit State

50.1 General considerations

The Deformation Limit State shall be satisfied if the movements (deflections or rotations) in the structure or structural element are less than specific maximum limit values.

The Deformation Limit State shall be verified in cases where deformation can cause the structure or structural element to be taken out of service for functional, aesthetic or other reasons.

Deformations shall be studied for service conditions which correspond, depending on the problem to be examined, in accordance with the combination criteria, set out in 13.3.

The total deformation produced in a concrete element is a sum of the various partial deformations that occur over time due to the loads that are applied, the creep and shrinkage of the concrete and the relaxation of the active reinforcements.

Deflections shall be maintained within the limits set out by the specific regulations in force, or failing this, by the limits indicated in this Code. The designer shall therefore design the structure with sufficient rigidity, and in extreme cases, shall require that a building procedure is used that minimises the part of total deflection that could damage non-structural elements.

50.2 Elements subjected to pure or combined bending stress

50.2.1 General method

The most common calculation method for deflection comprises a step by step structural analysis over time, in accordance with the criteria in Article 25, in which for each instant, the deformations are calculated by double integration of the curves along the length of the member.

50.2.2 Simplified method

This method applies to beams, reinforced concrete slabs and one-way slabs. The deflection shall be considered to comprise the sum of a temporary deflection and a time-dependent deflection, due to permanent loads.

50.2.2.1 Minimum depths

Deflections will not need to be verified in beams and slabs in which the span/effective depth ratio of the element under study does not exceed the value indicated in table 50.2.2.1.a. The slenderness ratios L/d shall be multiplied by 0.8 in beams or hollow core slabs comprising T-beams in which the ratio between the width of their flanges and webs exceeds 3.

Table 50.2.2.1.a *L/d* ratios in reinforced concrete beams and slabs subjected to simple bending

STRUCTURAL SYSTEM *L/d*	*K*	Highly reinforced elements: *p= 1.5%*	Slightly reinforced elements *p=0.*5%
Simply supported beam Simply supported one or two way slab	1.00	14	20
Beam[1] continuous at one end. One way slab [1,2] continuous on one side only.	1.30	18	26
Beam [1] continuous at both ends. Continuous one way or two way slab [1,2]	1.50	20	30
Edge and corner panels in flat slab on point supports	1.15	16	23
Inner panels in flat slab on point supports	1.20	17	24
Cantilever	0.40	6	8

[1] *An end shall be considered continuous if the corresponding moment is 85% or m ore of the perfect embedding moment.*
[2] *In one way slabs, the given slenderness values refer to the smaller span.*
[3] *In slabs on point supports (columns), the slenderness values relate to the larger spans.*

In the particular case of slabs comprising joists with spans of less than 7 m, and hollow core pre-stressed slabs with spans less than 12 m, where the imposed loads do not exceed 4 kN/m^2, no verification needs to be made as to whether the deflection satisfies the restriction of 50.1, if the total depth h is more than the minimum $h_{mín}$ given by:

$$h_{mín} = \delta_1 \ \delta_2 \ L / C$$

in which:

δ_1 Factor which depends on the total load and which has the value of $\sqrt{q/7}$, with q being the total load in kN/m^2;
δ_2 Factor which has a value of (L/6)$^{1/4}$;
L The design span of the slab in m;
C Coefficient whose value is taken from Table 50.2.2.1.b:

Table 50.2.2.1.b

C Coefficients				
Type of slab	Type of load	Type of span		
		Isolated	End	Internal
Reinforced beams	With partitions or walls Roofs	17 20	21 24	24 27
Pre-stressed beams	With partitions or walls Roofs	19 22	23 26	26 29
Pre-stressed hollow core slabs (*)	With partitions or walls Roofs	36 45		

(*) Pre-stressed members designed so that the moment of cracking is not exceeded with the rare combination,.

50.2.2.2 Calculation of instantaneous deflection

When calculating instantaneous deflections in cracked members of constant cross-section, in the absence of more rigorous methods, the following simplified method may be used at any construction stage:

1. The equivalent moment of inertia of a section is defined as the value I_e obtained from:

$$I_e = \left(\frac{M_f}{M_a}\right)^3 I_b + \left[1 - \left(\frac{M_f}{M_a}\right)^3\right] I_f \leq I_b$$

in which:

M_a Maximum bending moment applied to the section until the instant when the deflection is calculated.
M_f Nominal cracking moment of the section, which is calculated using the following expression:

$$M_f = f_{ctm,fl} W_b$$

$f_{ctm,fl}$ Mean flexural tensile strength of the concrete, according to 39.1.
W_b Strength modulus of the gross section relative to the end fibre tensioned.
I_b Moment of inertia of the gross section.
I_f Moment of inertia of the simply bent cracked section, which is obtained by disregarding the tensioned concrete zone and homogenising the areas of the active and passive reinforcements and multiplying these by the coefficient of equivalence.

2. The maximum deflection of a member may be obtained from the Materials' Strength Formulae, and using as the modulus of longitudinal deformation in the concrete the modulus defined in 39.6, and using as the constant moment of inertia for the entire member the moment corresponding to the reference section which is defined below:

a) In simply supported members: the central section.
b) In cantilevered members: the initial section.
c) On internal spans of continuous members.

$$I_e = 0.50\, I_{ec} + 0.25\, I_{ee1} + 0.25\, I_{ee2}$$

in which:

I_{ec} Equivalent inertia of the span's centre section.
I_{ee} Equivalent inertia of the support section.

d) In end spans, with continuity only on one of the supports,

$$I_e = 0.75\, I_{ec} + 0.25\, I_{ee}$$

When calculating instantaneous deflections in non-cracked members of constant cross-section, the gross inertia of the section shall be used.

50.2.2.3 Calculation of time-dependent deflection

Additional time-dependent deflections, produced by persistent loads resulting from the deformations due to creep and shrinkage, may be calculated unless greater accuracy is required, by multiplying the corresponding instantaneous deflection by the factor λ.

$$\lambda = \frac{\xi}{1 + 50\rho'}$$

in which:

p' Geometric ratio of the compression reinforcement, A_s' with reference to the area of the effective section, $b_0\, d$, in the reference section.

$$\rho' = \frac{A_s'}{b_0\, d}$$

ξ Coefficient that is a function of the duration of the load which shall be taken from one of the following values:

5 or more years	2.0
1 year	1.4
6 months	1.2
3 months	1.0
1 month	0.7
2 weeks	0.5

For age j of the load, and t for the deflection calculation, the value of ξ to be used for the calculation of λ is $\xi_{(t)} - \xi_{(j)}$.
If the load is applied in fractions, P_1, P_2...., P_n, the following value of ξ may be adopted:

$$\xi = (\xi_1 P_1 + \xi_2 P_2 + ... + \xi_n P_n) / (P_1 + P_2 + ... + P_n)$$

50.3 Elements subjected to torsional stress

The rotation of linear members or elements subjected to torsion may be calculated by simple integration of the rotations per unit length obtained from the following expression:

$$\theta = \frac{T}{0{,}3\ E_c\ I_j}$$ In the case of non-cracked sections

$$\theta = \frac{T}{0{,}1\ E_c\ I_j}$$ In the case of cracked sections

in which:

T Torsional moment in service.
E_c Secant modulus of longitudinal deformation defined in 39.6.
I_j Moment of torsional inertia of the gross concrete section.

50.4 Elements subjected to pure tension

Deformations in members subjected to pure tension may be calculated by multiplying the mean elongation per unit of the reinforcements ε_{sm}, obtained in accordance with 49.2.5, by the member's length.

Article 51. Vibration Limit State

51.1 General considerations

Vibrations may affect the service performance of structures for functional reasons. Vibrations may be uncomfortable for occupants and users, may affect the operating of equipment sensitive to this type of phenomenon, for example.

51.2 Dynamic performance

Generally, in order to satisfy the Vibration Limit State, the structure must be designed for natural vibration frequencies being sufficiently different of definite critical values.

CHAPTER 12

STRUCTURAL MEMBERS

Article 52. Structural plain concrete members

52.1 Scope

Structural plain concrete members are those members constructed using concrete that does not contain any reinforcement or which contains reinforcement only to minimise the effects of cracking and which is generally in the form of mesh near to faces.

This chapter does not apply to plain concrete structural elements that have their own special standards, other than in a subsidiary manner.

52.2 Concretes that may be used

The concretes defined in 39.2 may be used for plain concrete members.

52.3 Design loads

The combined design loads applicable at Ultimate Limit States are as indicated in Article 13.

52.4 Design of sections under compression

In a section of a plain concrete member acted upon only by a perpendicular compression force a design value of N_d (positive), applied at a point G, with eccentricity components (e_x, e_y) relative to a system of centroidal axes a component eccentricity of (e_x, e_y), relative to a system of cobaricentric axes, (case a; figure 52.4.a), N_d shall be considered to be applied at virtual point $G_1(e_{1x}, e_{1y})$, which will be the point which is the least favourable from the following two points:

$$G_{1x}\ (e_x + e_{xa},\ e_y) \text{ or } G_{1y}\ (e_x,\ e_y + e_{ya})$$

in which:

h_x and h_y	Maximum dimensions in these directions.
e_{xa}	$=0{,}05h_x \geq 2$cm
e_{ya}	$=0.05h_y \geq 2$cm

The resultant stress σ_d is calculated by assuming a uniform distribution of stresses in one part of the section, called its effective section, of area A_e (case b; figure 52.4.a), defined by a secant and whose baricentre coincides with the virtual application point G_1 of the perpendicular force and assuming the rest of the section to be inactive.

The safety condition is given by:

$$\frac{N_d}{A_e} \leq 0{,}85\, f_{cd}$$

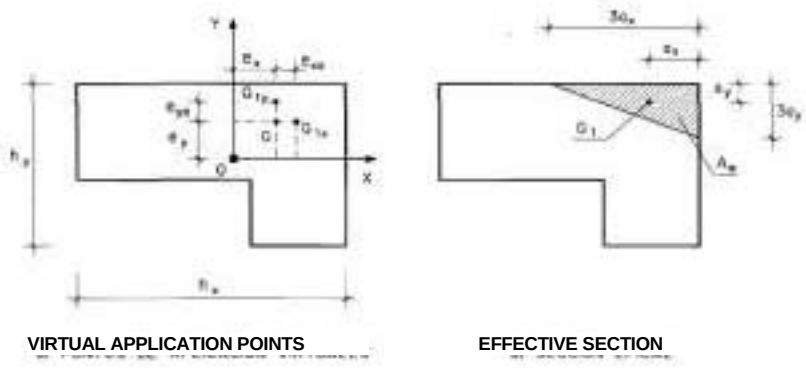

Figure 52.4.a

52.5 Design of sections under compression and shear stress

In a section of a plain concrete member, acted upon by a diagonal compression force with components with a design value of N_d and V_d (positive) applied at the point G, the virtual application point G1, and the effective area A_e, shall be determined as in 52.4. The safety conditions are as follows:

$$\frac{N_d}{A_e} \leq 0{,}85\, f_{cd} \qquad \frac{V_d}{A_e} \leq f_{ct,d}$$

52.6 Consideration of slenderness

In a plain concrete member subjected to compression, either with or without any shear stress, the first order effects produced by N_d have to be increased by second order effects, due to its slenderness (52.6.3). In order to take account of these, N_d shall be considered to be acting on a point G_2 which results from displacing G_1 (52.4) by a fictitious eccentricity defined in 52.6.4.

52.6.1 Virtual width

$b_v=2c$ shall be adopted for the virtual width b_v, of the section of a member, with c being the minimum distance between the centroid of the section (figure 52.6.1) and a straight line meeting tangent to the perimeter.

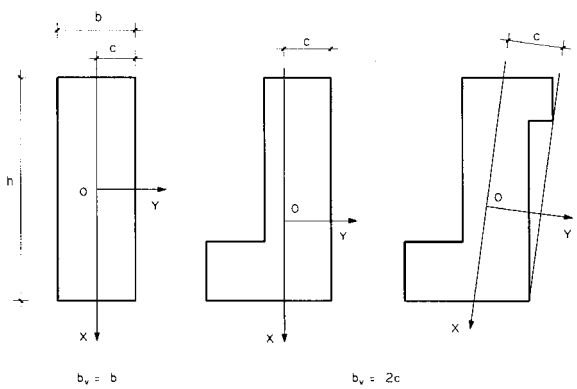

Figure 52.6.1

52.6.2 Buckling length

$l_o = \beta l$, shall be taken as the buckling length, l_o of a member, with l being the height of the member between its base and top, and $\beta = \beta_o \xi$ being the slenderness factor, with $\beta_o = 1$ in members with a horizontally braced top and $\beta_o = 2$ in members without any brace at the top.
The factor ζ takes account of the effect of the bracing by transverse walls and is:

$$\zeta = \sqrt{\frac{s}{4\,l}} \leq 1$$

in which:
s Distance between bracing walls.

In columns and other exempt elements ζ = 1 shall be adopted.

52.6.3 Slenderness

The slenderness λ of a plain concrete member shall be determined using the following expression:

$$\lambda = \frac{l_o}{b_v}$$

52.6.4 Fictitious eccentricity

The buckling effect of a member with a slenderness, λ, shall be considered equivalent to the buckling caused by the addition of fictitious eccentricity, e_a in a direction of the axis, and parallel to the virtual width b_v of the section, with a value of:

$$e_a = \frac{15}{E_c}(b_v + e_1)\,\lambda^2$$

in which:
E_c Instantaneous secant modulus deformation of the concrete in N/mm^2 at 28 days (39.6).
e_1 Determinant eccentricity (figure 52.6.4), which is valid for:

- Members with horizontally braced tops: the maximum value of e_{1y} on the z_0.abscissa.

$$\frac{l}{3} \leq z_o \leq \frac{2\,l}{3}.$$

- Members whose tops are not braced: the value of e_{1y} at its base.

The member shall be calculated at the abscissa z_o with component eccentricity (e_{1x}, $e_1 + e_a$) and at each end with its corresponding eccentricity (e_{1x}, e_{1y}).

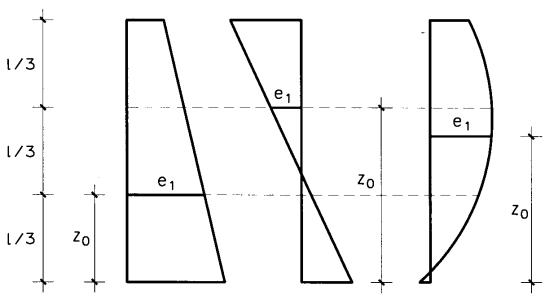

Figure 52.6.4

Article 53. Beams

Beams subjected to bending shall be designed in accordance with Article 42 or the simplified formulae in Annexe No. 7, based on the design values of the material strengths (Article 15) and the factored values for combined loads (Article 13). If bending is combined with shear force, the member shall be designed for the latter, in accordance with Article 44, and Article 45 if torsion is also present. The Longitudinal Shear Limit State shall be verified in composite members (Article 47).

The Cracking Deformation and Vibration Limit States shall also be verified when necessary, in accordance with Articles 49, 50 and 51 respectively.

Sub-paragraph 18.2.1 shall be taken into account in the case of T-sections and special shaped sections.

The configuration of reinforcements shall comply with the requirements in Article 69, in the case of passive reinforcements, and 70, in the case of active reinforcements.

Article 54. Supports

Supports shall be designed to withstand normal forces in accordance with Article 42 or the simplified formulae in Annexe No. 7, based on the design values for material strengths, (Article 15) and the factored values for combined loads (Article 13). If there is appreciable support slenderness, the Instability Limit State shall be verified Article 43). If there is shear force, the member shall be designed to withstand this in accordance with Article 44 and in accordance with 45 if torsion is also present.

The Cracking Limit State shall also be verified if necessary in accordance with Article 49.

The smallest dimension of in situ cast supports shall be at least 25 cm.

The configuration of reinforcements shall comply with the requirements in Article 69, in the case of passive reinforcements, and 70, in the case of active reinforcements.

The main reinforcement shall comprise at least four bars, in the case of rectangular sections, and six bars in the case of circular sections, with the gap between two consecutive bars being no more than 35 cm. The diameter of the thinnest compressed bar shall be at least 12mm. In addition, these bars shall be secured using hoops or stirrups, with the maximum gaps and minimum diameters for the transverse reinforcement indicated in 42.3.1.

Stirrups may be either circular or helical in form in circular supports.

Article 55. Two-way slabs or plates

55.1 Two-way slabs, including flat slabs, on continuous supports

This Article covers two-way reinforced and pre-stressed slabs, including flat slabs, continuous supports.

Unless evidence is supplied to the contrary, the total depth of the slab shall be at least *L/40* or 8 cm, with *l* being the span of the smallest bay.

The indications in Article 22 shall be followed as regards structural analysis.

The various combinations of design loads shall be examined when verifying the various Limit States in accordance with the criteria set out in Article 13.

The Ultimate Limit State of Failure due to perpendicular stresses shall be verified in accordance with Article 42, taking into consideration an equivalent bending stress that

accounts for the effect produced by the bending and torsional moments present at each point within the slab.

The Shear Limit State shall be verified in accordance with the indications in Article 44.

Whenever necessary, the Cracking, Deformation and Vibration Limit States shall also be verified in accordance with Articles 49, 50 and 51, respectively.

The configuration of reinforcements shall comply with the requirements in Article 69, in the case of passive reinforcements, and 70, in the case of active reinforcements.

A transverse reinforcement parallel to the design direction of the supports shall always be incorporated in rectangular slabs supported on two sides, and designed to resist a moment of 20% of the main moment.

55.2 Two-way slabs, including flat slabs, on isolated supports

This article is applicable to structures consisting of reinforced concrete slabs that are either solid or hollow, with ribs in two perpendicular directions, that generally do not have beams to transmit the loads to the supports, resting directly on columns with or without capitals.

Unless specially justified, the total depth of reinforced concrete slabs shall not be less than the following values:

- Solid slabs of constant thickness, *L*/32.
- Hollow slabs of constant thickness, *L/28*

With *L* being the larger dimension of the frame.

The distance between the centre lines of ribs shall not exceed 100 cm, and the thickness of the top cover shall not be less than 5 cm, which shall incorporate mesh distribution reinforcement.

The indications in Article 22 shall be followed when undertaking structural analysis.

The various combinations of weighted loads shall be examined when verifying the various limit states, in accordance with the criteria set out in Article 13.

The Ultimate Limit State of Failure due to perpendicular stresses shall be verified in accordance with Article 42, taking into consideration an equivalent bending stress that accounts for the effect produced by the bending and torsional moments present at each point within the slab.

The Limit State of Failure due to shear stresses shall be verified in accordance with the indications in Article 44. In particular, the ribs where they meet their drop panels, and edge elements, beams and transverse reinforcements shall be verified.

The Limit State of Failure due to torsion shall be verified in edge beams and transverse reinforcements in accordance with the indications in Article 45.

The Punching Limit State shall be verified in accordance with indications in del Article 46.

Whenever necessary, the Cracking, Deformation and Vibration Limit States shall also be verified in accordance with Articles 49, 50 and 51, respectively.

The configuration of reinforcements shall comply with the requirements in Article 69, in the case of passive reinforcements, and 70, in the case of active reinforcements.

Article 56. Shells

Unless supporting evidence can be provided to the contrary, shells with concrete thicknesses less than the following shall not be built:

- Folded shells: 9 cm.
- Single curvature shells: 7 cm.
- Double curvature shells: 5 cm.

Unless special evidence is provided, the following provisions shall be satisfied:

a) The reinforcements in the thin slab shall be configured in a rigorously symmetrical manner with regard to its average surface.

b) The mechanical ratio in any section of the thin slab shall satisfy the following limitation:

$$\omega \leq 0{,}30 + \frac{5}{f_{cd}}$$

in which f_{cd} is the design compressive strength of the concrete, expressed in N/mm^2.

c) The main reinforcements shall not be more than the following distances apart:

- Three times the thickness of the shell if a mesh is placed on its average surface.
- Five times the thickness of the shell, if a mesh is placed close to both faces.

d) The coverings of the reinforcements shall satisfy the general conditions set out in 37.2.4.

The indications in Article 23, shall be followed when conducting a structural analysis of the shells.

The various combinations of factored actions in accordance with the criteria set out in article 13 shall be examined when verifying the various Limit States.

The Ultimate Limit State due to perpendicular stresses shall be verified in accordance with Article 42, bearing in mind the axial stress and biaxial bending stress at each point in the shell.

The Limit State for Shear Stress shall be verified in accordance with the indications in Article 44.

The Punching Limit State shall be verified in accordance with the indications in Article 46.

The Cracking Limit State shall also be verified in accordance with Article 49 whenever necessary.

The reinforcements shall be configured in accordance with the requirements in Article 69, in the case of passive reinforcements, and Article 70 in the case of active reinforcements.

Article 57. Walls

Walls subjected to bending shall be designed in accordance with Article 42 or the simplified formulae in Annexe No. 7, based on the design values for the strength of their constituent materials and the design values of the combined actions (Article 13). If bending is combined with shear, the member shall be designed to withstand this stress in accordance with Article 44.

The Cracking Limit State shall also be verified in accordance with Article 49.

The configuration of reinforcements shall comply with the requirements in Article 69, in the case of passive reinforcements, and 70, in the case of active reinforcements.

Article 58. Foundation elements

58.1 General

The provisions in this Article shall directly apply to footings and pile caps forming the foundations for isolated or linear supports, although their general principles may be applied to combined foundation members.

This Article also covers the case of continuous foundation members for various supports (foundation slabs).

It finally includes the connecting beams, piles and plain concrete footings.

58.2 Classification of structural concrete foundations

Pile caps and foundation footings may be classified as stiff or flexible.

58.2.1 Stiff foundations

Stiff foundations include the following:

- Pile caps whose offset *v* in the main offset direction is less than 2h. (figure 58.2.1.a).
- Footings whose offset *v* in the main offset direction is less than 2h. (figure 58.2.1.b).
- Bored piles.
- Massive foundation members: counterweights, massive gravity walls, etc.

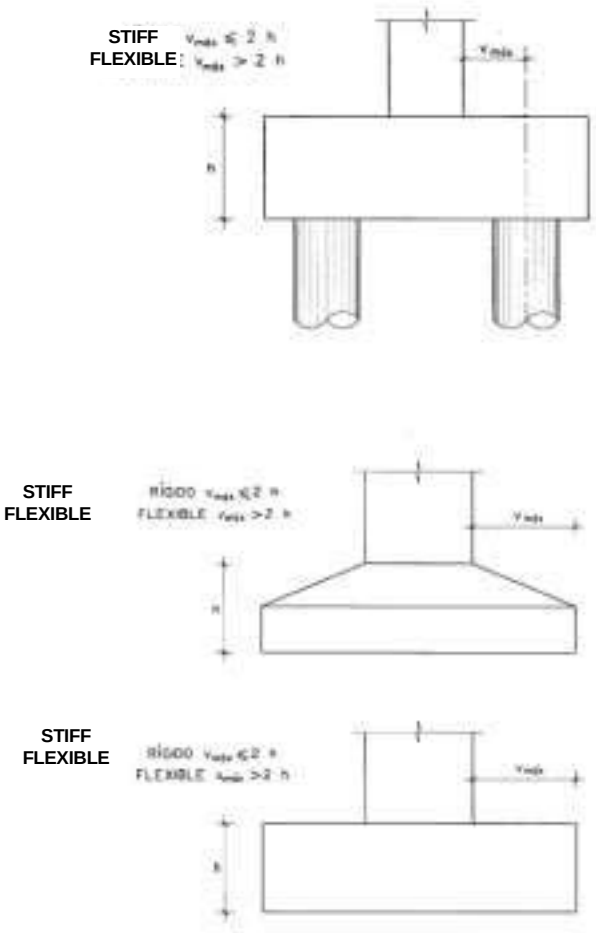

Figure 58.2.1.a

In rigid foundations, the strain distribution is not linear at a section level, the most suitable general analysis method is therefore the strut-and-tie method contained in Articles 24 and 40.

58.2.2 Flexible foundations

Flexible foundations include the following:

- Pile caps whose offset *v* in the main offset direction is more than 2h. (figure 58.2.1.a).
- Footings whose offset *v* in the main offset direction is more than 2h. (figure 58.2.1.b).
- Raft foundations.

In flexible foundations, the distribution of strains may be considered linear on a section level, with the general theory of bending being applicable

58.3 General design criteria

Foundation members shall be designed to resist acting loads and induced reactions. The stresses acting on the foundation element are therefore required to be fully transmitted to the ground or to the piles on which they are resting.

When defining the dimensions of the foundation and verifying the ground stresses or the reactions of piles, the worst combinations transmitted by the structure shall be considered, taking into account the second order effects in the case of slender supports, the dead weight of the foundation member, and that of the ground acting on it, with their characteristic values being adopted in every case.

When verifying the various Ultimate Limit States for the foundation element, the effects of the stresses in the ground and reactions of the piles obtained for the stresses transmitted through the structure for the worst design combinations, shall be considered bearing in mind the second order effects in the case of slender supports, the design value of the dead weight of the foundation element whenever necessary, and that of the ground acting upon it.

58.4 Verifying of elements and reinforcement dimensioning

58.4.1 Rigid foundations

The general bending theory does not apply in this type of member and a strut and tie model needs to be defined in accordance with the criteria indicated in Article 24; the reinforcements needs to be dimensioned and the conditions in the concrete need to be verified in accordance with the requirements set out in Article 40.

A model must be established in each case, enabling the equilibrium between the external loads transmitted by the structure, the loads due to the ground overburden on the footings, pile caps, etc., and the soil stresses or pile reactions.

58.4.1.1 Rigid footings

The model shown in figure 58.4.1.1.a, shall be used in rectangular footings subjected to straight bending-compression provided that the effect of the weight of the footing and the ground above it can be disregarded.

The main reinforcement shall be designed to resist the tensile force Td indicated in the model, which is obtained from:

$$T_d = \frac{R_{1d}}{0{,}85\, d}\left(x_1 - 0{,}25\, a \right) = A_s\, f_{yd}$$

with $f_{yd} \leq 400$ N/mm^2 (40.2), in which R_{1d} is the sum of the stresses in the shaded trapezium in the width of the footing, and x_1 is the distance between the centre of gravity of the trapezium and the load line of N_{1d} and with the meaning of the rest of the variables being as shown in figure 58.4.1.1.a and the stresses σ_{1d} and σ_{2d} being those obtained considering only the loads transmitted by the structure. This reinforcement shall be incorporated without any reduction of section, along the entire length of the footing, and anchored in accordance with the criteria set out in Article 69. The welded transverse bar anchorage type is particularly recommended in this case.

The strength of the nodes in the model does not generally need to be verified if the characteristic strength of the concrete in the piles is the same as the characteristic strength of the concrete in the footing. In all other cases, the verification indicated in paragraph 40.4 shall be carried out.

However, verifying the nodes implicitly involves verifying the struts.

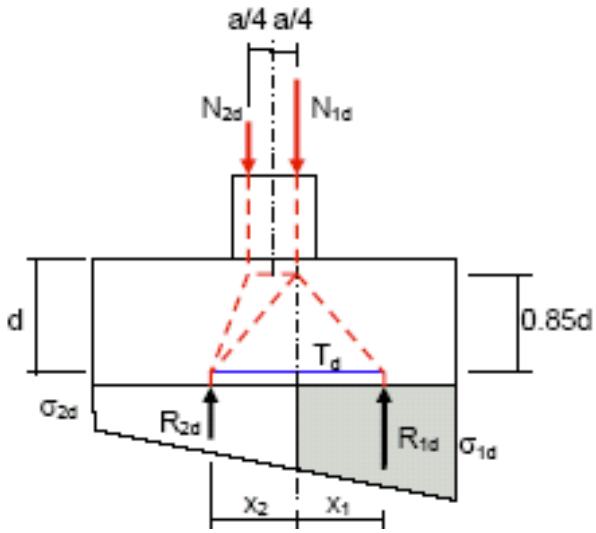

Figure 58.4.1.1.a

58.4.1.2 Rigid pile caps

The reinforcement necessary shall be determined on the basis of the tensions in the ties in the model adopted for each pile cap. For the most common cases, the various models and the expressions enabling the reinforcements to be determined are indicated in the following paragraphs.

Verifying the strength of the concrete in nodes is not generally required of in situ cast piles and if these and the columns are made from a concrete with a characteristic strength that is the same as the characteristic strength of the concrete in the pile cap. In other cases, the verification in paragraph 40.4 will have to be carried out.

However, the verifying the nodes implicitly involves verifying the struts.

58.4.1.2.1 Pile caps on two piles

4.1.2.1.1 Main reinforcement

The reinforcement shall be designed to resist the design tension, T_d in figure 58.4.1.2.1.1.a, which may be taken to be:

$$T_d = \frac{N_d\,(\,v + 0{,}25\,a\,)}{0{,}85\,d} = A_s\,f_{yd}$$

with $f_{yd} \leq$ 400 N/mm^2 (40.2) and in which N_d corresponds to the design axial load of the most loaded pile.

The lower reinforcement shall be incorporated without any reduction in its section, along the entire length of the pile cap. This reinforcement shall be anchored in a straight line or at right angles using welded transverse bars, starting from vertical planes which pass through the axis of each pile (figure 58.4.1.2.1.1.b).

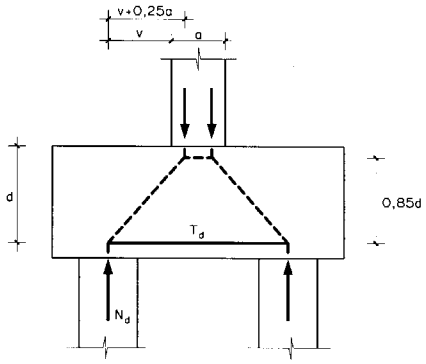

Figure 58.4.1.2.1.1.a

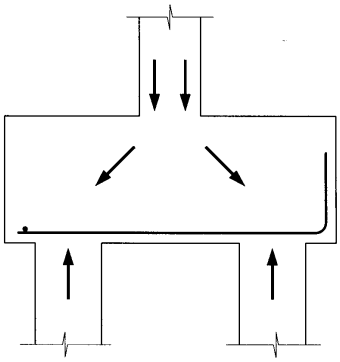

Figure 58.4.1.2.1.1.b

58.4.1.2.1.2 Secondary reinforcement

The secondary reinforcement of pile caps on two piles shall comprise:

- A longitudinal reinforcement arranged in the upper face of the pile cap and which extends without any steps along its entire length. Its mechanical strength shall not be less than 1/10 of the mechanical strength of the lower reinforcement.
- A horizontal reinforcement and a vertical reinforcement arranged in a grid configuration in the side faces. The vertical reinforcement shall comprise closed hoops which tie the upper longitudinal reinforcement to the lower longitudinal reinforcement. The horizontal reinforcement shall comprise closed hoops that tie the aforementioned vertical reinforcement (figure 58.4.1.2.1.2.a). The ratio of these reinforcements with reference to the cross-sectional concrete area perpendicular to its direction shall be at least 4%. If the width exceeds half the thickness, the reference cross-section shall be taken to be a width that is half that of the depth.

With a high concentration of reinforcement it is also recommended that the vertical hoops described in this paragraph are brought closer together in the anchorage area of the main reinforcement, in order to ensure that main reinforcement is well bound together in the anchorage zone. (figure 58.4.1.2.1.2.b).

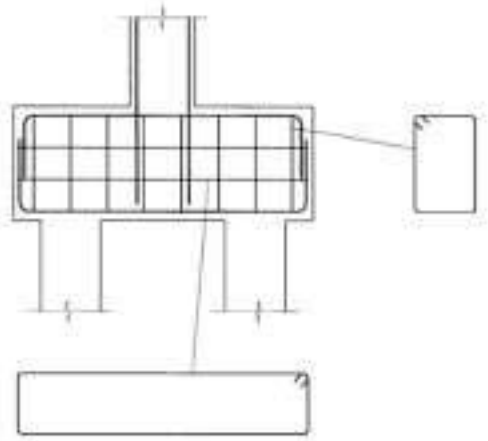

Figure 58.4.1.2.1.2.a

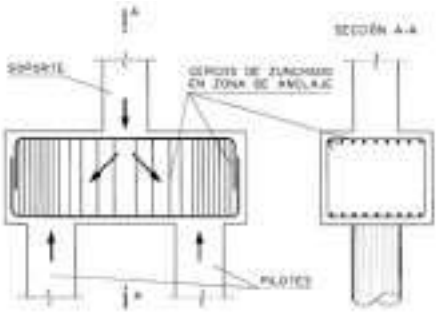

Figure 58.4.1.2.1.2.b

58.4.1.2.2 Pile caps on several piles

The reinforcement for pile caps on several piles may be classified as:

- Main reinforcement

  Located in strips over the piles (see figure 58.4.1.2.2.a). A band or strip is defined as a zone whose centre line is the line which joint the centres of the piles and whose width is the same as the diameter of the pile plus twice the distance between the top face of the pile and the centre of gravity of the reinforcement of the tie reinforcement. (see figure 58.4.1.2.2.b).

- Secondary reinforcement:

  Located between the strips (see 58.4.1.2.2.1.a)

- Secondary vertical reinforcement:

  Located in the form of hoops, tying in the main strip reinforcement (see 58.4.1.2.2.2.b)

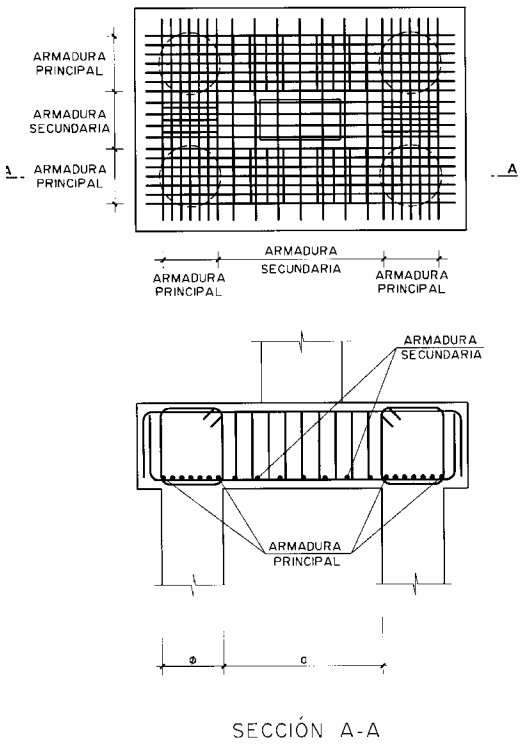

Figure 58.4.1.2.2.a

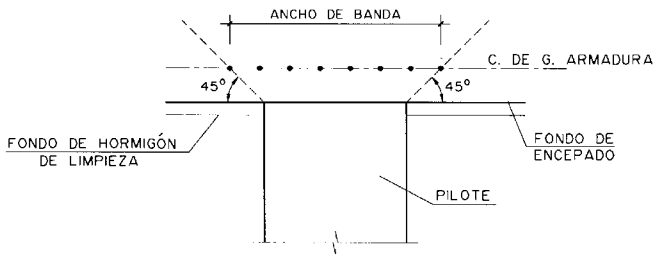

Figure 58.4.1.2.2.b

58.4.1.2.2.1 Main reinforcement and horizontal secondary reinforcement

The lower main reinforcement shall be fitted in bands or strips on piles. This reinforcement shall be arranged so that it is anchored from a vertical plane which passes through the centre line of each pile.

A secondary reinforcement in a grid configuration shall also be fitted, whose mechanical strength in each direction shall not be less than 1/4 of the mechanical strength of the strips or bands.

The main reinforcement between each set of piles in pile caps on top of three piles fitted along the vertices of an equilateral triangle, with the column located in the centroid of the triangle, may be obtained from the tension force T_d obtained from the following expression:

$$T_d = 0{,}68 \frac{N_d}{d} (0{,}58\, l - 0{,}25\, a) = A_s\, f_{yd}$$

with f_{yd} < 400 N/mm^2 (40.2) and in which:

N_d Design axial stress of the most loaded pile (figure 58.4.1.2.2.1 .a).

d Effective depth of the pile cap (figure 58.4.1.2.2.1.a).

The tension force corresponding to each strip in pile caps on four piles with the column located at the centre of the rectangle or square may be obtained from the following expressions:

$$T_{1d} = \frac{N_d}{0{,}85\, d}\,(\,0{,}50\, l_1 - 0{,}25\, a_1\,) = A_s\, f_{yd}$$

$$T_{2d} = \frac{N_d}{0{,}85\, d}\,(\,0{,}50\, l_2 - 0{,}25\, a_2\,) = A_s\, f_{yd}$$

with $f_{yd} < 400$ N/mm^2 and in which:

N_d Design axial stress of the most loaded pile (figure 58.4.1.2.2.1 .a).
d Effective depth of the pile cap (figure 58.4.1.2.2.1.a).

The main reinforcement in continuous foundations on a linear pile cap shall be located perpendicular to the wall, calculated using the expression in sub-paragraph 58.4.1.2.1, whereas in the direction parallel to the wall, the pile cap and the wall shall be designed as a beam (which is usually a deep beam) supported on the piles (figure 58.4.1.2.2.1.c).

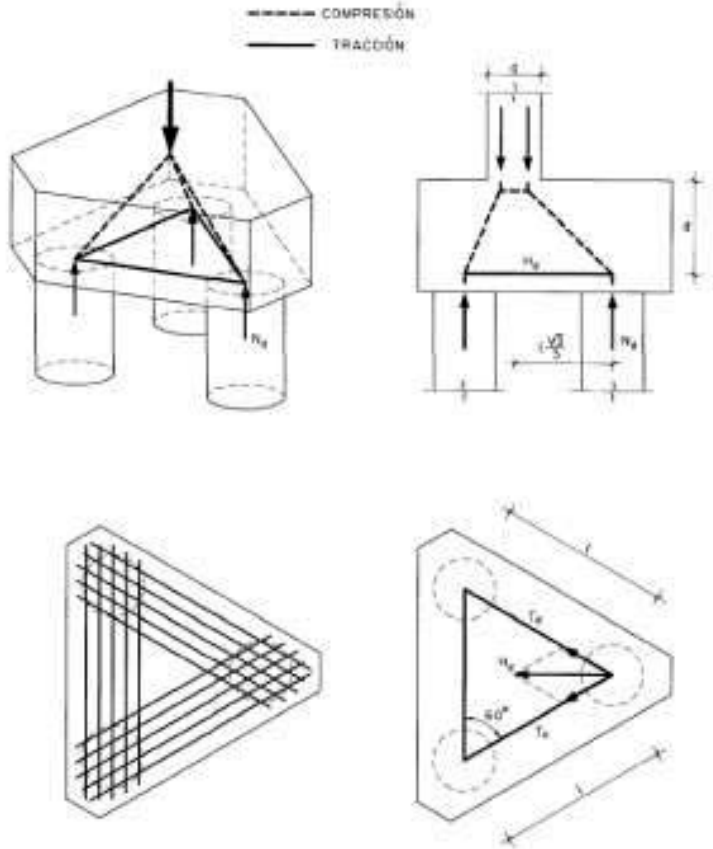

Figure 58.4.1.2.2.1.a

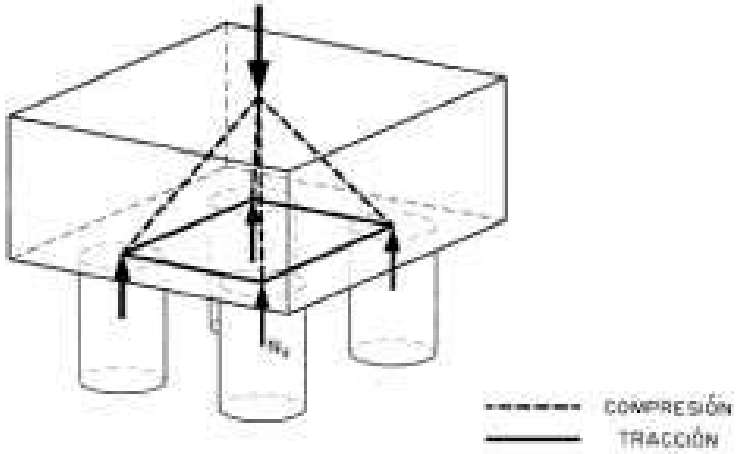

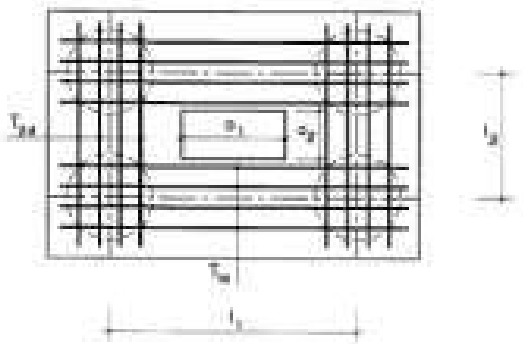

Figure 58.4.1.2.2.1.b

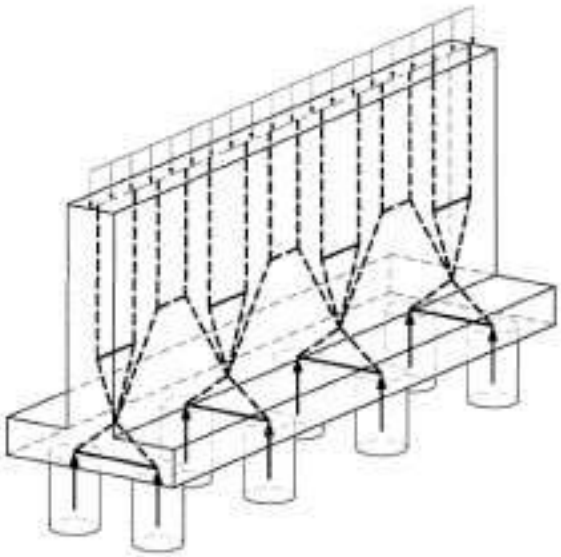

Figure 58.4.1.2.2.1.c

58.4.1.2.2.2 Vertical secondary reinforcement

Vertical secondary reinforcement shall be provided to stresses due to the dispersion of the compression field. figure 58.4.1.2.2.2, which shall have a total mechanical strength of not less than the value of N_d / 1.5n, with n≥3, being:

N_d *n* Design value of the axial force for the support.
N Number of piles

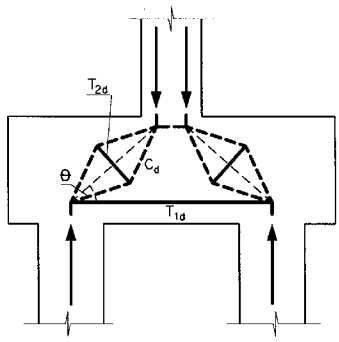

Figure 58.4.1.2.2.2

58.4.2 Flexible foundations

The general bending theory shall apply in this type of foundations.

58.4.2.1 Flexible footings and pile caps

Unless an accurate soil-foundation interaction study is undertaken, the simplified criteria described below may be used.

58.4.2.1.1 Bending analysis

The reference cross-section to be considered for bending analysis, is defined as follows: it is plane, perpendicular to the base of the footing or pile capping and takes account of the total cross-section of the footing or pile cap. It is parallel to the face of the support or the wall and is located behind this face and 0.15a away, with *a* being the dimension of the support or the wall measured orthogonally to the section considered.

The effective depth of this reference section shall be taken as being the effective depth of the section parallel to section S_1, located in the face of the support or the wall (figure 58.4.2.1.1.a).

All the foregoing assumes that the support and wall are concrete members. If this is not the case the quantity 0.15a shall be replaced by:

- 0.25a, in the case of brick or masonry
- Half the distance between the face of the support and the edge of the steel plate in the case of metal supports on top of steel load distribution plates.

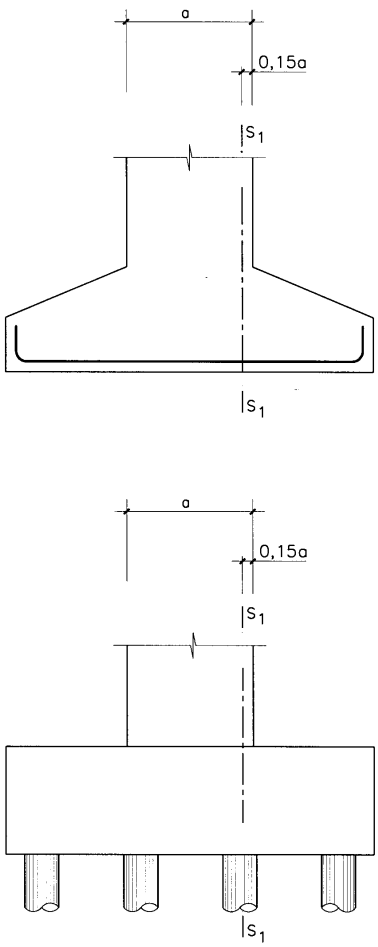

Figure 58.4.2.1.1.a

The maximum moment to be considered when analysing flexible footings and pile caps is the moment produced in the reference section, S_1 defined in the paragraph above (figure 58.4.2.1.1.b).

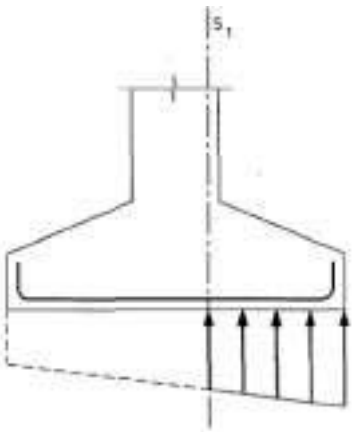

Figure 58.4.2.1.1.b

The reinforcement necessary in the reference section shall be determined using pure bending analysis in accordance with general design principles for sections subjected to the perpendicular stresses indicated in Article 42.

In flexible footings and pile caps, working in a single direction and in square foundation elements operating in two directions, the reinforcement may be uniformly distributed throughout the entire width of the foundation.

In rectangular foundation elements working in two directions, the reinforcement parallel to the larger side of the foundation, of length *a',* may be distributed uniformly across the entire width, *b'* of the foundation base. The reinforcement parallel to the smaller side *b'* shall be arranged so that a fraction of the total area A_s of *2b'/(a'+b')* is uniformly distributed in a central strip that is coaxial with the support, and has a width *b'*. The rest of the reinforcement shall be distributed uniformly in the two resulting side strips.

This width of the strip, *b'* shall not be less than *a+2h*, in which:

a The side of the support or wall parallel to the larger side of the foundation base.
h Total depth of the foundation.

If *b'* is less than *a+2h, b'* shall be replaced by *a+2h* (figure 58.4.2.1.1.c).

The reinforcement designed shall be anchored in accordance with the less favourable of the following two criteria:

- The reinforcement shall be anchored in accordance with the conditions in Article 69, of cross-section S_2 located on an effective depth of the reference section S_1.
- The reinforcement shall be anchored beyond section S_3 (figure 58.4.2.1.1.d) for a force:

$$T_d = R_d \frac{v + 0{,}15\,a - 0{,}25\,h}{0{,}85\,h}$$

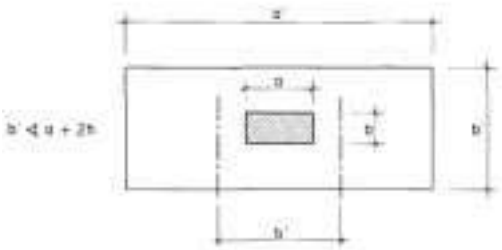

Figure 58.4.2.1.1.c

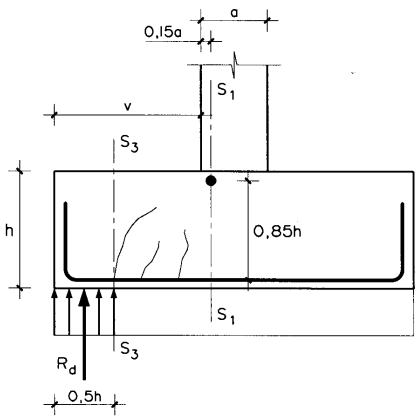

Figure 58.4.2.1.1.d

58.4.2.1.2 Design for tangential stresses

The resistance to tangential stresses in flexible footings and pile caps, near to concentrated loads or reactions (at supports and piles) shall be verified for shear as a linear element and for punching shear.

The footing or pile cap shall be verified in shear in accordance with the provisions in Article 44, in the reference section S_2.

The reference section S_2 shall be located a distance that is equal to the effective width away from the face of the support, wall or pedestal, or the midpoint between the face of the support and the edge of the steel plate, in the case of metal supports on top of steel distribution plates. This reference section shall be plane, perpendicular to the base of the footing or pile cap and take account of the overall section of the aforementioned foundation element.

The Limit State Shear Punching shall be verified in accordance with Article 46°.

58.4.2.1.3 Cracking verification

The Cracking Limit State shall be verified in accordance with Article 49 whenever necessary.

58.4.2.2 Raft foundations

]This paragraph relates to reinforced or pre-stressed concrete surface elements (slabs), used for the foundations of various supports.

The models described in Article 22 may be used to obtain the forces.

When verifying the various Limit States, the various combinations of factored actions shall be studied in accordance with the criteria set out in Article 13°.

The Ultimate Limit State for Perpendicular Stresses shall be verified in accordance with Article 42, considering an equivalent bending force which takes account of the effect produced by the bending and torsional moments present at each point in the slab.

The Failure Limit State for Shear shall be verified in accordance with the indications in Article 44.

The Limit State for Punching Shear shall be verified in accordance with the provisions in Article 46.

Similarly, whenever necessary, the Cracking Limit State shall also be verified in accordance with Article 49.

The configuration of reinforcements shall comply with the requirements in Article 69, with regard to passive reinforcements, and 70 with regard to active reinforcements.

58.5 Centring and tie beams

Centring beams are linear elements that may be used to resist construction eccentricities or moments in pile heads where pile caps are used on one or two piles, if these do not have an individual strength to resist these actions, or in offset footings.

Tie beams are linear elements connecting superficial or deep foundations, and are particularly necessary for foundations in earthquake zones.

These elements shall generally satisfy the requirements set out for beams in Article 53.

58.6 Piles

Piles are verified in a similar manner to their support, as indicated in Article 54, in which the soil at least partially prevents buckling.

A minimum eccentricity defined in accordance with tolerances shall always be considered.

When dimensioning in situ cast piles without any pile casing, a design diameter of d_{cal} equal to 0.95 times the pile's nominal diameter d_{nom} shall be used and the following conditions satisfied:

$$d_{nom} - 50\ mm \leq d_{cal} = 0.95\ d_{nom} \leq d_{nom} - 20\ mm$$

58.7 Plain concrete footings

The depth and width of a plain concrete footing resting on the ground, shall be determined so that the design virtual tensile strength values and shear strengths are not exceeded.

The reference section, S_1, considered when undertaking bending analysis is defined as follows:

It is plane, perpendicular to the base of the footing and takes account of the overall cross-section of the footing or pile cap. It is parallel to the face of the support or the wall and is located behind this face at a distance of 0.15a, with *a* being the dimension of the support or the wall measured orthogonally to the section considered. The total depth of this reference section shall be taken as being the total depth of the section parallel to section S_1, located in the face of the support or the wall (figure 58.4.2.1.1.a).

All the foregoing assumes that the support and wall are concrete elements. If this is not the case the quantity 0.15a shall be replaced by:

- 0.25a, in the case of masonry walls
- Half the distance between the face of the support and the edge of the steel plate in the case of metal supports on top of steel distribution load plates.

The reference section to be considered in shear design shall be located a distance away that is equal to the depth, starting from the face of the support, wall, pedestal, or from the midpoint between the face of the column and the edge of the steel plate, in the case of metal supports on steel load distribution plates. This reference section is plane, perpendicular to the base of the footing and takes account of the overall cross-section of this footing.

The reference section to be considered in punching shear design shall be perpendicular to the base of the footing and defined so that it has as small a perimeter as possible and is not located closer to the perimeter of the support, wall or pedestal than half the total depth of the footing.

The factored bending moment and the factored shear in the corresponding reference section shall produce tensile bending and mean tangential shear stresses, whose value shall be lower than the concrete's design virtual bending and shear strengths.

The bending analysis shall be conducted assuming a state of plane stress and strain, and on the assumption that the entire section is whole i.e. that the concrete is not cracked.

The footing shall be verified for shear and punching shear in the reference sections defined above, with its shear strength being defined by the most restrictive condition.

The concrete's design tensile and shear strength shall be taken to be the value $f_{ct,d}$ indicated in Article 52°.

The value of $2f_{ct,d}$ shall be used when verifying punching shear.

58.8 Minimum dimensions and reinforcements for footings, pile caps and raft foundations

58.8.1 Minimum depths and dimensions

The minimum depth at the edges of plain concrete footings shall not be less than 35 cm.

The total minimum depth at the edges of reinforced concrete members shall not be less than 25 cm if they are resting on the ground, or 40 cm in the case of pile caps on top of piles. In addition, in the latter situation, their thickness shall not at any point be less than the diameter of the pile.

The distance between any point in the perimeter of the pile and the external perimeter of the base of the pile cap shall not be less than 25 cm.

58.8.2 Layout of reinforcement

The longitudinal reinforcement shall satisfy the provisions in Article 42. The minimum ratio refers to the total amount of reinforcement in the bottom, upper face, and side walls in the direction concerned.

The reinforcements arranged in the upper, lower and side faces, shall not be more than 30 cm apart.

58.8.3 Minimum vertical reinforcement

Transverse reinforcement does not need to be incorporated in flexible footings or pile caps, provided that this is not required by the design and the concrete is placed without any discontinuities.

If the footing or pile cap essentially behaves as a broad beam designed as a linear element in accordance with 58.4.2.1.2.1, the transverse reinforcement shall satisfy the provisions in Article 44.

If the footing or pile cap basically behaves in two directions and is designed in shear in accordance with 58.4.2.1.2.2, the transverse reinforcement shall satisfy the provisions in Article 46.

Article 59. Structures with precast elements

59.1 Aspects relating to structures comprising precast members in general

59.1.1 General

This article covers several specific aspects applicable to structures partially or fully comprising precast concrete elements.

Given the evolutionary nature of their construction, when designing of precast structures and members, have to be considered in the actions analysis as well as in the limit state verifications:: (1) Temporary situations, (2) provisional and final supports, (3) the connections between the various members.

Temporary situations during the construction of precast structures include the stripping of members, their handling and transport to the stock place, their storage, transport as far as the site, assembly and, finally, their connection.

Any dynamic loads generated during any temporary situation shall be taken into account.

59.1.2 Structural analysis

Structural analysis shall include:

- The change in geometry, the support conditions of each member, and the characteristics of its constituent materials at each stage and the interaction of each member with other elements.
- The influence on the structural system of the behaviour between connections of the elements, and in particular, their strength and deformation.
- The uncertainties in the conditions of the transmission of forces between elements, due to geometric imperfections in members or their positioning, or in their supports.

In earthquake-free regions, the beneficial effect of the inhibited horizontal deformation caused by friction between the member and its support element, may be taken into account, provided that:

- The overall stability of the structure does not depend exclusively on this friction.
- The support system prevents the accumulation of irreversible slippage, caused by asymmetric performance under cyclic loads, as may be the case in thermal cycles in the ends of bi-supported beams.
- No impact load is possible.

The effects of horizontal movement and the integrity of connections shall be taken into account in the design value of the structure's strength.

59.1.3 Connection and support of precast elements

59.1.3.1 Materials

The materials for the connection and support of elements shall be:

- Stable and durable for the structure's service life.
- Physically and chemically compatible.
- Protected from physical and chemical attack.
- Fire resistant in order to ensure the fire resistance of the structure as a whole.

Support means shall have strength and deformation characteristics that concord with those set out in the design.

Metal connections shall withstand corrosion or be provided with corrosion protection, unless they are to be solely exposed to a non-aggressive environment. Protective films may be used if they need to be inspected.

59.1.3.2 Design of connections

The connections shall have to be able to withstand the effects due to the actions considered in the design and capable of satisfying the movements and deformations set out to ensure correct resistant performance of the structure.

Any potential damage to the concrete and the ends of the elements, such as loss of cover, cracking due to splitting etc., shall be avoided. The following aspects shall therefore be taken into consideration:

- Relative movements between elements.
- Imperfections
- Stresses and type of joint
- Ease of execution
- Ease of inspection

Verification of the strength and stiffness of connections shall be based on an analysis supported, if the event of any uncertainties, by tests.

59.1.3.3 Compression connections

In these connections if shear stress is less than 10% of the compression force it can be disregarded.

Support materials, such as mortar, concrete or polymers shall be laid between the faces of elements in contact. The relative movement of their support surfaces shall be prevented during hardening. In exceptional cases, hollow supports may be constructed (without any intercalated materials), provided that their quality and perfect surfaces are guaranteed, and that the mean stresses in the contact surfaces do not exceed 0.3 f_{cd}.

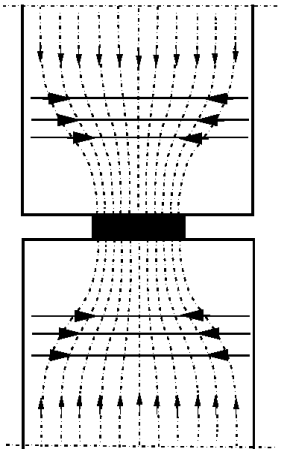

Figure 59.1.3.1. a

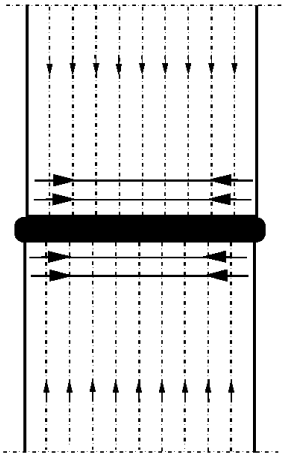

Figure 59.1.3.1 b

The effects of concentrated loads (figure 59.1.3.1.a) and the effects of the expansion of soft materials (figure 59.3.1.1.b) which generate transverse tensile stresses in the concrete, that have to be resisted using reinforcements arranged in an ad hoc manner, shall be taken into consideration in compression supports. The requirements in Article 61 shall be satisfied for the first situation, whereas in the second situation, reinforcement requirements can be calculated using the following expression:

$$A_s=0.25(t/h)N_d/f_{yd}$$

in which:

A_s Section of the reinforcement to be provided in each surface.
t Thickness of the support means comprising soft material.
h Dimension of the support means in the reinforcement direction.
N_d Axial compression force in the support.

59.1.3.4 Shear connections

The requirements in Article 47 shall be adopted to transfer the shear at the interface between two concrete elements, e.g. between a precast element and in situ concrete,

59.1.3.5 Bending and tension connections

The reinforcement shall be continuous through the connection, and anchored on the adjacent element. This continuity may be achieved by:

- Overlapping of bars
- Placing mortar in the sheathes into which the continuous reinforcements are inserted
- Welding of bars or plates
- Pre-stressing
- Other mechanical devices such as nuts and bolts.

59.1.3.6 Halving joints

The requirements set out in paragraph 64.2 shall be taken into consideration when analysing and verifying this type of element.

59.1.3.7 Anchorage of reinforcements on supports

Reinforcements shall be arranged on support elements and supported elements so that they can be anchored, taking into account geometric deviations, as indicated in figure 59.1.3.8.2.b.

59.1.3.8 Considerations for the bearing of precast members

59.1.3.8.1 General

The correct working of bearing devices means shall be ensured using appropriate reinforcement in adjacent elements, limiting the support pressures and adopting measures aimed at allowing or restricting movements.

The actions due to creep, shrinkage, temperature, out of alignment, and being out of plumb, shall be taken into consideration when designing elements in contact with bearings that do not permit any slip or rotation without a significant co-action. The effects of these actions may require the arrangement of transverse reinforcement in support elements and supported elements, or of continuity reinforcement for the tying of these elements. These actions may also affect the design of the main reinforcement of these elements.

Bearings shall be analysed and designed to ensure that they are correctly positioned, taking into account possible deviations or tolerances in their production and assembly.

59.1.3.8.2 Bearings for elements connected to one another (non-isolated)

The equivalent length of a simple support, such as the one in figure 59.1.3.8.2.a, may be calculated as follows:

$$a = a_1 + a_2 + a_3 + \sqrt{\Delta a_2^2 + \Delta a_3^2}$$

in which:

a_1 Net length of the support means which is not less than the minimum value in table 59.1.3.8.2.1, which generates a support pressure of σ_{Ed}.

$$\sigma_{Ed} = \frac{N_d}{b_1 \cdot a_1} \leq f_{Rd}$$

in which:

N_d Design value of the force to be resisted in the support.

b_1 Net width of the support *(figure 59.1.3.8.2.a)*

f_{Rd} Design strength of the bearing. In the absence of more accurate specifications, the value of 0.4 f_{cd} may be adopted for the strength of the support in the case of dry supports (without any levelling material), or the strength of the mortar or intermediate levelling element, shall never be less than 85% of the smaller of the design strengths of the concrete in the elements in contact. The provisions in 59.2.3.3. shall be followed in the case of linear supports of surface elements, such as hollow cored slabs.

a_2 Distance considered to be non-effective between the external edge of the support element and the edge of the element in accordance with figure 59.1.3.8.2.a and table 59.1.3.8.2.2.

a_3 Distance equivalent to a_2 in the supported element, in accordance with figure 59.1.3.8.2 and table 59.1.3.8.2.3.

Aa_2 Tolerance on deviations in the distance between bearing elements in accordance with table 59.1.3.8.2.4.

Δa_3 Tolerance in deviations on the length of the supported element, $\Delta a_3 = l_n / 2500$.

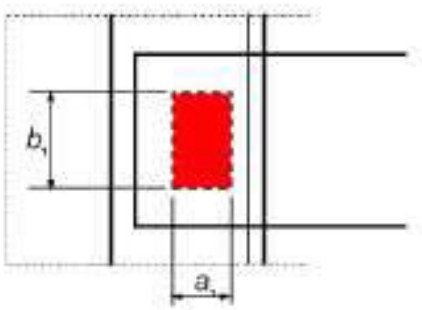

Figure 59.1.3.8.2.a

Table 59.1.3.8.2.1. Minimum values of a_1 in mm.

	Relative stress in the support σ_{Ed} / f_{cd}		
Type of support	≤ 0.15	0.15 – 0.4	> 0.4
Aligned supports (slabs, roofs)	25	30	40
Ribbed slabs, beams and purlins	55	70	80
Concentrated supports (beams)	90	110	140

Table 59.1.3.8.2.2. Values for distance a_2, in mm, which is assumed to be non-effective from the external face of the support element.

Relative stress in the support σ_{Ed} / f_{cd}				
Material and type of support		≤ 0.15	0.15 – 0.4	> 0.4
Steel	linear concentrated	0 5	0 10	10 15
Reinforced concrete $f_{ck} \geq 30$ N/mm^2	linear concentrated	5 10	10 15	15 25
Plain or reinforced concrete $f_{ck} \geq 30$ N/mm^2	linear concentrated	10 20	15 25	25 35

Table 59.1.3.8.2.3. Values of distance of a_3, in mm, which is assumed to be non-effective from the external face of the supported element

Arrangement of reinforcement	Support	
	Linear	Concentrated
Continuous bars on support	0	0
Straight bars, horizontally bent, near to the end of the element	5	15, but not less than the cover
Tendons or straight bars exposed at the end of the element	5	15
Vertical bending of the bars	15	Cover + internal bending radius

Table 59.1.3.8.2.4. Tolerance Δa_2 in the geometry of the free span between support faces. L = span en mm

Support material	Δa_2
Steel and pre-cast concrete	$10 \leq L/1200 \leq 30mm$
In situ concrete	$15 \leq L/1200 + 5 \leq 40mm$

The net length of the support means a_1 is dependent upon the distances to this from the ends of the support element and of the supported element respectively, which shall satisfy the following conditions:

$d_i \geq c_i + \Delta a$, with bars anchored using horizontal bending.
$d_i \geq c_i + \Delta a, + r_i$ with bars anchored using vertical bending.

in which:

c_i Nominal cover of the reinforcement
Δa Tolerance for imperfections
r_i Bending radius

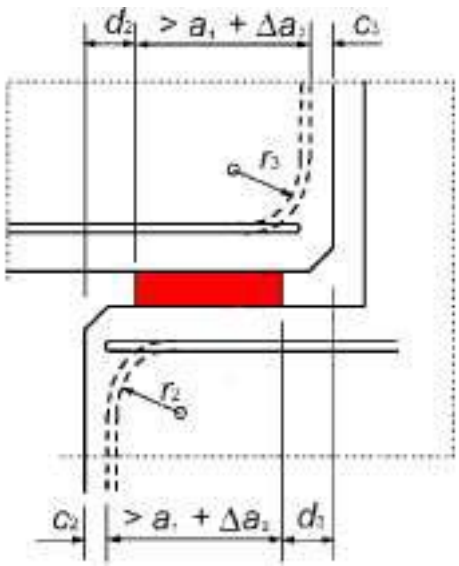

Figure 59.1.3.8.2. b Example of reinforcement detail on a support

59.1.3.8.3 Supports for isolated elements

The equivalent length shall be 20 mm more than that for a non-isolated element.

59.1.4 Pocket foundations

59.1.4.1 General

Concrete pockets shall be capable of transferring axial and shear forces, and bending moments from the column to the foundation.

59.1.4.2 Pockets with keyed surfaces

Pocket foundations which have indented surfaces may be considered to act monolithically with the column.

If the indentations are capable of resisting the transfer of shear stresses between the column and the foundation, the punching shear verification shall be carried out as if the filler and the foundation were monolithic in accordance with Article 46, and as shown in figure 59.1.4.2.

59.1.4.3 Pocket foundations with smooth surfaces

In this case, it is assumed that the axial force and the stress moments are transmitted from the column to the foundation, via the system of forces F_1, F_2 and F_3 and the corresponding friction forces through the concrete filling as shown in figure 59.1.4.3.

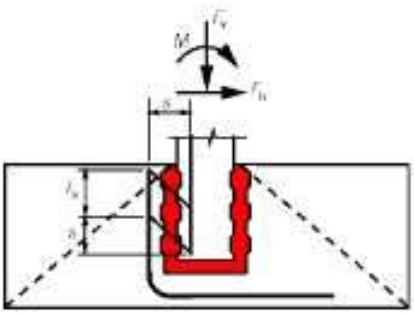

Figure 59.1.4.2

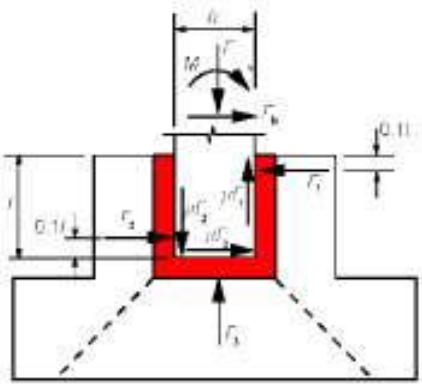

Figure 59.1.4.3

The embedding of the column inside the column pocket in these joints shall be greater than 1.2 times the column thickness ($l \geq 1.2\ h$).

The friction coefficient should not be taken greater than $\mu = 0.3$.

59.1.5 Tying systems

In plane elements, such as walls and slabs loaded in their planes and acting as envelopes, the interaction between their various constituent elements may be obtained by tying the elements together using perimeter transverse reinforcements and/or internal tie beams.

59.2 One-way slabs comprising secondary beams and hollow-core slabs

This Article refers to one-way slabs comprising joists and pre-cast hollow-core slabs with infill elements, in situ concrete and reinforcement incorporated in situ, and basically subjected to bending.

The various combinations of factored actions shall be studied in accordance with the criteria set out in Article 13, when verifying the various Limit States. The Failure Limit State with perpendicular stresses shall be verified in accordance with Article 42. If bending is combined with shear stress, the Ultimate Limit State for Shear Stress shall be verified in accordance with the information in Article 44. If a torsional moment is present, the Ultimate Failure Limit State in torsion of linear elements shall be verified in accordance with Article 45.

If concentrated loads are present in hollow-core slabs without an in situ cast top slab, the Limit State in Punching Shear shall be verified in accordance with Article 46. The Limit State in Longitudinal Shear shall be verified in accordance with Article 47 in slabs comprising reinforced or pre-stressed joists and in hollow-core slabs with in situ cast upper slab.

The Cracking, Deformation and Vibration Limit States shall be verified, as necessary, in accordance with Articles 49, 50 and 51, respectively.

The maximum distance between any secondary beam supports shall be determined, taking account of the fact that during in situ concreting the characteristic execution load on the beams or slabs is the total dead weight of the slab plus an execution imposed load of not less than 1 kN/m^2. Stresses may be determined from linear calculation, assuming constant stiffness in the beam or slab and adopting the distance between the end supports of the secondary beams and the centre lines of the secondary beam supports as the design span L_a of each length (figure 59.2).

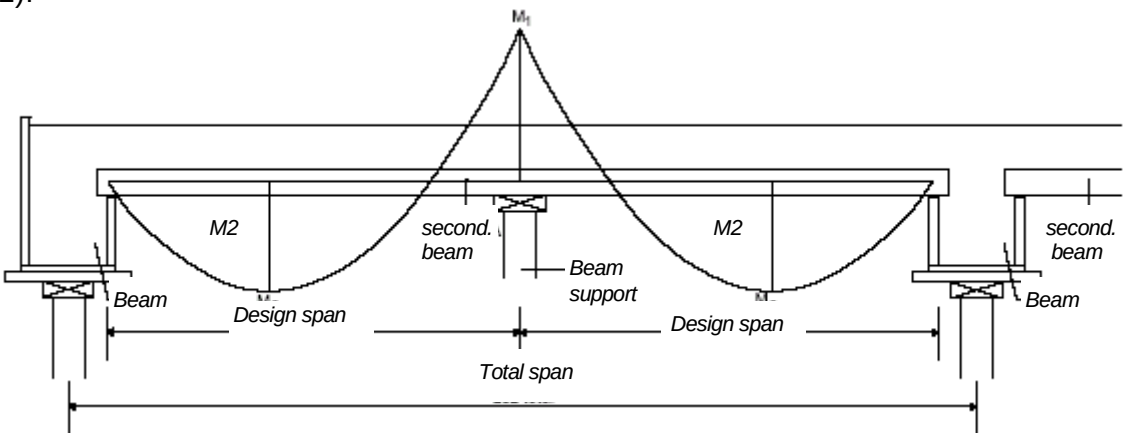

Figure 59.2

In pre-stressed joists and pre-stressed hollow-core slabs, it shall also be ensured that under the action of design execution loads and the effect of pre-stressing following transfer, calculated with all the losses being deducted up until the date of execution of the slab, (and adopting the safety coefficients for the serviceability Limit States corresponding to a temporary situation, in accordance with 12.2), the following stress limits shall not be exceeded:

a) On secondary supports, the maximum compression stress in the lower fibre of the

secondary beam or hollow-core slab shall not exceed 60% of the concrete's compression strength, and the bending strength defined in 39.1. shall not be exceeded in its upper fibre.

b) The maximum compression stress in the upper fibre of the secondary beam or hollow-core slab in bays shall not exceed 60% of the concrete's compression strength and the decompression state (zero tension stress) shall not be exceeded in its lower fibre.

The arrangement of reinforcements shall comply with the requirements in Article 69, in the case of passive reinforcements and with the requirements of Article 70, in the case of active reinforcements.

Annexe No. 12 contains arrangements of reinforcements, constructional aspects and specific design aspects for this type of slab.

59.2.1 Geometric conditions

The transverse section of the slab shall satisfy the following requirements (figure 59.2.1):

a) An in situ cast upper slab shall be placed, whose minimum thickness, h_o, shall be 40 mm on top of secondary beams, ceramic or concrete infill members, or pre-stressed hollow-core slabs, and 50 mm on top of infill members of other types, or on top of any type of infill in the case of zones with a design seismic acceleration greater than 0.16 g.
The in situ cast upper concrete slab may be eliminated in pre-stressed hollow-core slabs, apart from where large lateral or large concentrated loads obtain, provided that compliance with the Ultimate and Serviceability Limit States are suitably evidenced. In this case, in order to ensure the combined working of the slabs and the transverse transmission of loads (especially where point or linear loads are present), a tie shall be fitted in the zone where slabs are connected to the main beams or walls.

b) The profile of the infill member shall be such that at any distance c away from its centre line of symmetry, the thickness of the in situ concrete upper slab shall not be less than c/8 in the case of composite infill members and c/6, in the case of hollow infill members.

c) In slabs comprising joists without any transverse reinforcements connected to the in situ poured concrete, the profile of the infill member shall leave a gap of at least 30 mm on either side of the upper face of the secondary beam.

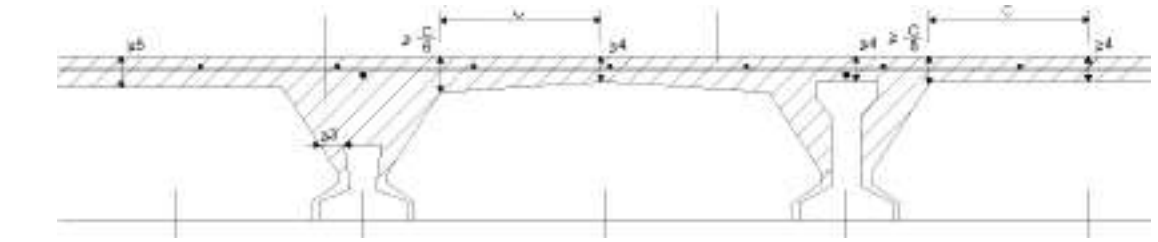

Figure 59.2.1 Geometric conditions of slabs

d) The minimum thickness of the webs and of the upper and lower flanges in pre-stressed hollow-core slabs shall be greater than any of the following values:

- $\sqrt{2h}$, with h being the total depth of the pre-cast member in mm.
- 20 mm.
- Result obtained by adding 10 mm to the maximum aggregate size.

e) The shape of the joint between pre-stressed hollow-core slabs shall be suitable for ensuring the introduction of filler concrete so that an enclosed space is created that can transmit the shear force between adjoining slabs and to facilitate the introduction of any reinforcements therein, and ensure proper bonding. The width of the joint at its top shall not be less than 30 mm and if their interior contains any longitudinal tie bars, the width of the joint at the bar shall be at least the greater of the following two values:

- ϕ + 20 mm
- $\phi + 2D$
  with D and ϕ expressed in mm.

If the longitudinal joint has to resist a vertical shear force, its surface shall be provided with at least one groove of suitable size, with regard to the strength of the filler concrete. The height of the groove shall always be at least 35 mm, its depth (or maximum width) shall be at least 10 mm and the distance between the top part of the groove and the upper surface of the pre-stressed hollow-core slab shall be at least 30 mm.

59.2.2 Distribution reinforcement

Distribution reinforcement shall be arranged in the upper in situ concrete slab; the distances between longitudinal and transverse elements shall not exceed 350 mm, it shall have a minimum diameter of 4 mm in both directions, be perpendicular and parallel to the ribs, and its ratio shall be at least the minimum set out in table 42.3.5.

Distribution reinforcement shall have a minimum diameter of 5 mm if it is taken into consideration for the purposes of checking Ultimate Limit States.

To ensure continuous working of slabs and the transverse transmission of loads in pre-stressed hollow-core slabs without any in situ upper concrete slab (especially where point or linear loads obtain), a tie shall be incorporated in zone where the slabs are connected to the main beams and walls.

59.2.3 Connections and bearings

59.2.3.1 General

Verification shall be carried out on every type of support to ensure that the tensile strength of the reinforcement arranged in the support is greater than the forces produced in the hypothesis that a crack is initiated in the face of the support at a slope of 45°.

59.2.3.2 Bearings in slabs with secondary beams

The ribs in a slab may be connected to the tying system of a wall or to a beam that has a depth that is considerably larger than that of the slab and which is called a direct support, to a plane beam, to the head of a hybrid beam, or to a intersected beam that has the same depth as the slab, and which is called an indirect bearing. Annexe 12 shows diagrams for common supports and the values of the embedded lengths of elements and overlap lengths of protruding reinforcements, to ensure the correct working of the connection.

59.2.3.3 Supports in pre-stressed hollow-core slabs

The supports may be either direct or indirect in this type of slab.

a) Direct supports in pre-stressed hollow-core slabs on beams or walls shall rest on a layer of fresh mortar at least 15 mm thick, or elastomeric material strips, or on individual supports located underneath each rib in the slab (figure 59.2.3.3.a). Pre-stressed hollow-core slabs are not allowed to be directly supported on brick; reinforced concrete transverse reinforcements shall be provided for the support.

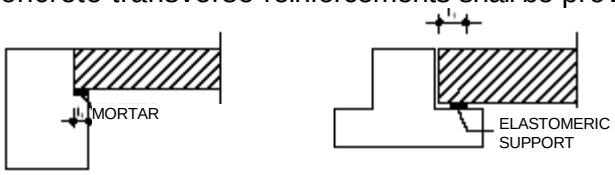

Figure 59.2.3.3.a Direct supports in hollow-core slabs

The design value of the support pressure, assuming an embedment equal to the nominal embedment less 20 mm, shall never exceed 0.4 f_{cd} in the smaller of the two concrete members in contact, where the support comprises mortar or the smaller value of 0.85 f_{cd} and the design strength of the elastomeric material, if this material is used.

b) Indirect supports may or may not comprise shores for the pre-stressed hollow-core slab.

Annexe 12 includes the minimum and nominal embedment of hollow-core slabs according to the type of support (direct or indirect), and of its conditions so that the correct functioning of the joint can be ensured.

59.2.4 Arrangement of reinforcements in slabs

The basic reinforcement in reinforced secondary slabs shall be arranged along their entire length, in accordance with sub-paragraph 42.3.2. Additional lower reinforcement may be incorporated only along part of their length. This additional reinforcement shall be arranged symmetrically about the secondary beams mid point.

Active reinforcement located in the bottom zone of a pre-stressed secondary beam shall comprise at least two bars arranged in the same horizontal plane and symmetrically about the mid vertical plane. The distance between reinforcements in pre-stressed hollow-core slabs shall be less than 400 mm and twice the member's depth.

Upper reinforcement placed in situ in supports in slabs with secondary beams shall be placed like reinforcement for negative moments, with at least one bar on each secondary beam. If more than two bars need to be fitted per rib, these shall be distributed along the support line in order to ensure than the concrete fills the rib properly and they shall be suitably anchored on either side of the rib.

An upper reinforcement shall be fitted in the outer supports of end bays that can resist a bending moment that is at least a quarter of the maximum moment of the bay. This reinforcement shall extend from the outer face of the support along a length not less than a tenth of the span plus the width of the support. The reinforcement shall extend as a bent bar with the necessary anchorage length.

Upper reinforcement shall be arranged in pre-stressed hollow-core slabs without any in situ upper slab whenever necessary, in suitably prepared voids that are subsequently filled in and with the concrete being removed from its top for a length that is at least equal to that of the bars (figure 59.2.4.a).

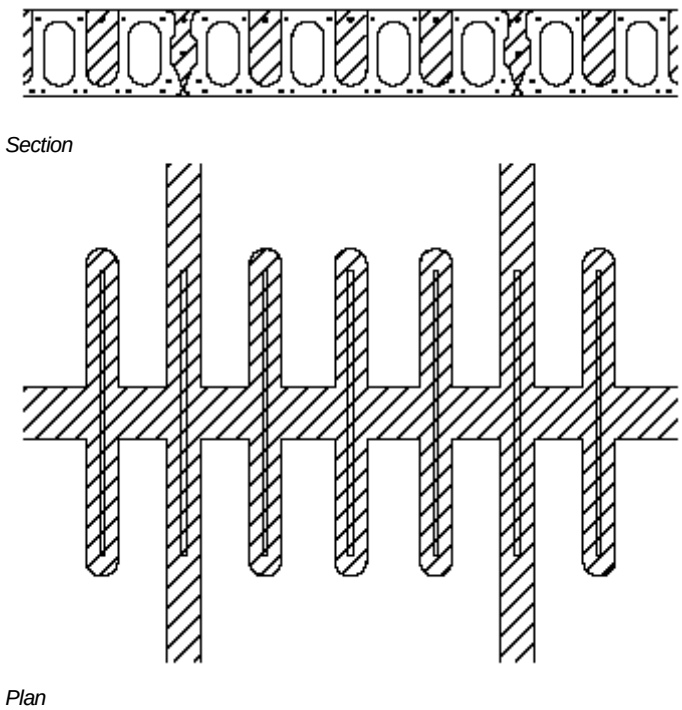

Figure 59.2.4.a Upper reinforcement in pre-stressed hollow core slabs

59.3 Other types of slabs comprising precast elements

Particular care shall be taken in the structural analysis of slabs comprising precast elements other than those contained in paragraph 59.2, such as members with a π section or channels or precast pre-slabs, taking account of the structural layout, loads, supports and the characteristics of the materials during successive constructional phases, during handling, transport, and assembly, and other aspects covered in paragraph 59.1 of this Code.

Article 60 Structural elements for bridges

60.1 Decks

60.1.1 General considerations

This Article applies to the most common bridge decks made from structural concrete, such as decks comprising precast beams, slabs, ribbed decks and box section decks.

The actions and their characteristic, representative, and design values to be considered when designing decks and the combinations to be established when verifying the various Serviceability and Ultimate Limit States, shall be as set out by the special regulations in force or, failing this, the information in this Code.

When determining the effects of these loads, the structure shall be modelled and the necessary analysis carried out in accordance with the provisions in Chapter 5.

The geometric characteristics and the materials which have to be considered when verifying Ultimate Limit States shall be as indicated in Chapter 4 and Chapter 8.

The strength and stability of the structure shall be guaranteed at all intermediate construction phases and in its final service state. To ensure this guarantee, the relevant Ultimate Limit State and Serviceability Limit States shall be undertaken at each of the verification phases adopted. Verifications shall be carried out on pre-stressed elements during the pre-stressing force transfer phase, when the structure is in put into service and at much late stages.

The degree to which forces and stresses resulting from rheological phenomena are distributed over time shall be assessed in evolutive structures. this type of phenomenon shall be analysed in accordance with Article 25 if it is significant in these cases.

The verifications for Ultimate Limit Failure State due to perpendicular stresses in decks shall be carried out in accordance with Article 42, or with the simplified formulae in Annexe No. 7, whenever applicable. When verifying and dimensioning the various elements for the Ultimate Limit Failure State due to Shear forces, the information in Article 44 shall be followed. In linear elements in which torsion may be significant, the Ultimate Limit Failure State due to Torsion shall be verified as indicated in Article 45.

The Serviceability Limit States in cracking, deformation and vibration shall be carried out whenever necessary, in accordance with Articles 49, 50 and 51.

The regions where pre-stressing forces are applied shall be dimensioned in accordance with the information in Article 61.

60.1.2 Decks comprising precast beams

The various construction phases of these decks shall be taken into consideration when verifying or dimensioning their elements and suitable account shall be taken of acting loads and structural configuration, its support system and resistant sections during each constructional phase.

The information in Article 18 shall be taken into consideration in the case of double T, channel or similar beams, so that the effective depths of their flanges to be considered in each situation can be determined.

Precast beams and slab shall be connected in accordance with the requirements in Article 47.

Punching shear verifications shall be undertaken in the slab with regard to the effect of concentrated heavy vehicle loads in accordance with Article 46.

The discontinuity of isostatic decks shall be verified with particular care with regard to deck deformations in the support area, in accordance with Article 50, in order to prevent the platform from breaking due to the relative rotation of the two decks in their support zone. Instantaneous and time-dependent deformations, which can be generated during the life of the beams and, in particular, between their manufacture and their incorporation in the structure, shall be taken into consideration.

When for reasons of driving comfort, the number of transverse joints in a road surface needs to be minimised, this may comprise a continuous slab between decks or a joint or hinge may be incorporated between the compression slabs of the decks, using tie rods. In the first case, the slab shall be rendered continuous on the ends of precast beams and these shall be separated from the latter along a specified length L_d (figure 60.1.2). When dimensioning this zone, not only shall local loads be taken into consideration, but also the forces generated by the deformations imposed in the element due to the relative rotation of the ends of the two decks.

If a continuity hinge with penetrating continuous reinforcement is fitted, for reasons of durability this shall be made from deformed stainless steel.

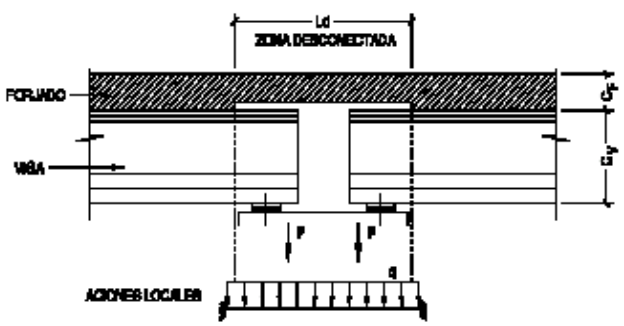

a) Continuity slab between decks

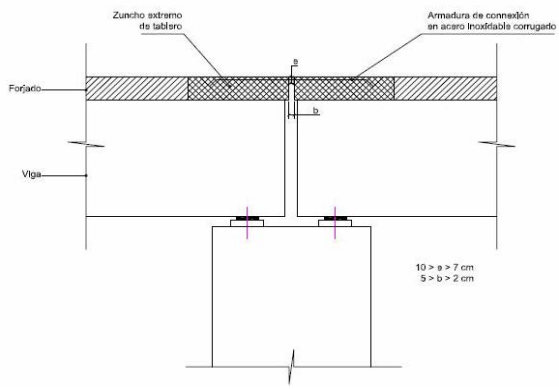

b) Articulation between connecting slabs using tie rods

Figure 60.1.2

If half way supports are included in precast elements, these type D regions shall be verified and dimensioned using the struts and ties models indicated in Article 59. The dimensioning of the areas where pre-stressing forces are applied shall be undertaken in accordance with the information in Article 62. Channel shaped sections or similar containing envelopes shall be determined in accordance with paragraph 60.5.

60.1.3 Slab decks

Decks in which the ratio between the width of their enclosed part and their span is less than 0.25, may be considered to be linear elements for the purposes of analysing forces and verifying Limit States. If this is not the case, decks shall be deemed to be two-way slabs.

The joint between the enclosed parts of the slab any cantilevers, shall be dimensioned in accordance with the requirements in sub-paragraph 44.2.3.5.

Verifications of punching shear for the effects of the wheels of heavy vehicles shall be undertaken on cantilevers and zones above hollow elements, in accordance with Article 46.

The dimensioning of the zones where pre-stressing forces are applied in pre-stressed slabs shall be undertaken in accordance with the information in Article 62.

60.1.4 Ribbed decks

Article 18 shall be taken into consideration so that the effective depths of the flanges to be considered in each situation can be determined.

The joints between ribs and upper slab in horizontal and vertical joining sections shall be in accordance with the requirements in sub-paragraph 44.2.3.5

Verifications of punching shear due to concentrated heavy goods vehicle loads shall be carried out on the upper slab in accordance with Article 46.

The region where the pre-stressing force is applied shall be dimensioned in accordance with the information in Article 62. If membranes are included in support sections, these shall be dimensioned in accordance with paragraph 60.5.

60.1.5 Box girder decks

Article 18 shall be taken into consideration when determining the effective widths of the flanges to be considered in each situation.

The horizontal and vertical joining sections of joints between the various slabs forming the box girder shall be in accordance with the requirements in sub-paragraph 44.2.3.5.

Verifications of punching shear due to concentrated heavy goods vehicle loads shall be carried out on the upper slab and cantilevers in accordance with Article 46.

The end regions where the pre-stressing force is applied shall be dimensioned in accordance with the information in Article 62. Support membranes shall be verified and dimensioned in accordance with paragraph 60.5.

60.2 Piles

This Article covers compound piles for each support line for one or more shafts with a hollow or solid transverse section, either with or without an upper head block for supporting the deck and whose foundation may comprise individual footings or pile caps, for each shaft or only for all the shafts in the support line.

The thickness of shafts with a box type transverse section, comprising a series of plane partitions, shall not be less than 1/30 of the transverse dimension of each partition. The transverse bending caused by potential differential thrusts between the inside and outside due to the ground water etc. shall be taken into consideration when designing the partitions.

The information contained in Article 61 shall be followed when dimensioning regions D, corresponding to the support zone.

The buckling length and, on the basis of this, the mechanical slenderness of each shaft, shall be determined when dimensioning and verifying the shafts and taking account of their actual connections with the deck.

Piles whose shafts have a mechanical slenderness of λ less than 100, may be deemed to be isolated elements and designed for the Ultimate Instability Limit State in accordance with paragraph 43.5.

Horizontal loads acting on the head of each pile, caused by deformations and loads from the deck may be analysed assuming that the entire structure acts in a linear way; second order effects may be disregarded.

In piles with a large slenderness ratio (λ > 100), once the loads transmitted by the deck have been distributed between the piles using linear methods, non-linear geometric and mechanical analysis shall be carried out to determine the forces in accordance with Article 21. Generally, the pile will merely need to be analysed as an isolated element taking account of its actual connections to the deck. However, in very particular cases, it may be appropriate to analyse the entire structure.

The requirements contained in Article 58 shall be followed when verifying and dimensioning foundations.

60.3 Abutments

This Article refers to closed, open abutments and chair shape bearing load elements. Abutments shall withstand the actions transmitted by the deck and support the soil providing access to the structure. The contact with the soil is an important determinant for the durability of this type of element; the requirements in Chapter 7, (Article 37) shall therefore be taken into careful consideration.

The elements of a abutment shall be considered during its various construction phases when verifying and dimensioning.

Unless special measures are adopted to guarantee the compound effect of passive thrust or potential settling of backfills on the outside of the abutment, the dimensioning of its various elements of an abutment does not generally need to be included.

The requirements contained in Article 58 shall be followed when verifying and dimensioning foundations.

The dintels or load bearing elements of an open abutment may generally be considered to be plane structures. The requirements contained in Article 58 shall be followed when verifying and dimensioning foundations.

For the purposes of designing and dimensioning abutments of the straight bottom type may be deemed to be a direct foundation for the loads transmitted by the deck through the supports. The requirements set out in Article 58 shall be followed for their verifying and dimensioning.

60.4 Anchorage zones

Anchorage zones for pre-stressed elements shall be analysed in accordance with Article 62.

60.5 Diaphragms in decks

The function of the diaphragms covered by this article, is to transfer loads from the deck to the piles and stirrups.

The geometric characteristics of diaphragms shall be such that they ensure the flow of forces from the deck to the supports located in this cross-section.

Deck diaphragms located in cross-sections that coincide with the support on piles or abutments shall be designed to transmit both horizontal and vertical axis shear, and the effect of torsion in the piles or abutments (if the deck is supported on this section using one or more than one support means) if applicable.

The design of the diaphragms shall take account of the possible eccentricity of reactions and the consequent bending of the diaphragms when in any situation, the central plane of the diaphragms does not coincide with the support axis.

Diaphragms shall be designed for both definitive and temporary situations obtaining during construction or support replacement operations.

Membranes generally constitute generalized D regions where the strut and tie method shall be used. In addition to the reinforcements obtained from the general strut and tie method, the concentrated load reinforcement will need to be fitted in the area located on top of the supports.

A reinforcement mesh of 0.30 m size and a minimum geometric ratio of 0.15% on each face and direction shall be fitted on each face of the diaphragm for crack control.

Diaphragms in which the decks' webs are directly supported on the support means on piles, shall be at least 0.50 m thick.

Diaphragms for the indirect support of deck webs on support means shall be at least twice the depth of the flanges resting on them.

Monolithic pile-deck joints comprising diaphragms shall have a thickness that is at least the same as the thickness of the faces of the piles located on their extension.

Article 61. Concentrated loads on solid block members

61.1 General

A concentrated load, applied to a solid member constitutes a D region.

The general analysis method for a D region is as indicated in Article 24. The struts, ties and nodes verifications and the characteristics of the materials to be considered shall be as indicated in Article 40.

The equivalent lattice model, in the case of the concentrated load in figure 61.1.a, shall be as indicated in figure 61.1.b.

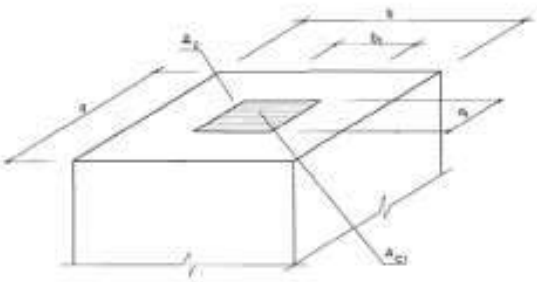

Figure 6.1.1.a

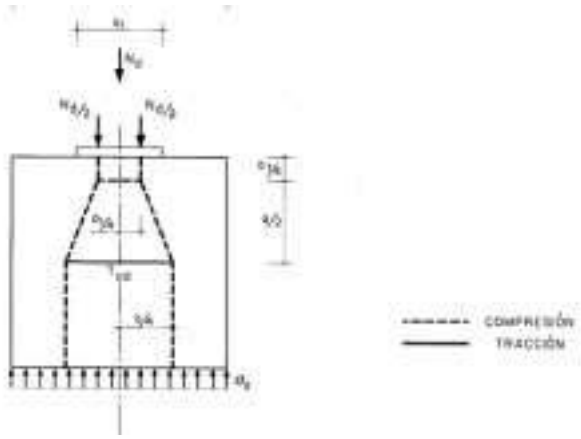

Figure 61.1.b

61.2 Verifying of nodes and struts

The maximum compressive force that may obtain in the Ultimate Limit State on a restricted surface, figure 61.1.a, of area A_{c1}, concentrically and homothetically situated on another area, A_c, assumed to be plane, may be analysed using the following formula:

$$N_d \leq A_{c1} f_{3cd}$$

$$f_{3cd} = \sqrt{\frac{A_c}{A_{c1}}}\, f_{cd} \leq 3{,}3\, f_{cd}$$

Provided the element on which the load is acting does not have any internal voids and its thickness, h is $h \geq 2A_c/u$, with u being the perimeter of A_c.

If the two surfaces, A_c and A_{c1} do not have the same centre of gravity, the perimeter of A_c shall be replaced by an internal homothetic perimeter of A_{c1} and defining an area A_c' which has its centre of gravity at the point of application of the force N, and applying to the areas A_{c1} and A_c' the formulae indicated above.

61.3 Transverse reinforcements

The tie rods T_d indicated in figure 61.1.b shall be dimensioned for the design tension indicated in the following expressions:

$T_{ad} = 0{,}25\, N_d \left(\frac{a - a_1}{a} \right) = A_s\, f_{yd}$ in a direction parallel to a, and

$T_{bd} = 0{,}25\, N_d \left(\frac{b - b_1}{b} \right) = A_s\, f_{yd}$ in a direction parallel to b, and $f_{yd} \leq 400$ N/mm² *(paragraph 40.2)*

61.4 Criteria for arrangement of reinforcements

The corresponding reinforcements shall be arranged between 0.1a and a and 0.1 b and b, distances away respectively. These distances shall be measured perpendicular to the surface A_c.

Stirrups which improve the confinement of concrete shall be preferably used.

Article 62. Anchorage zones

The anchorage of active reinforcements makes up a D region in which the distribution of deformations is non-linear on a section level. The general method in Articles 24 and 40 or the results of experimental studies shall therefore be applied for their analysis.

In those cases where the stresses due to the anchorages and those produced by support reactions and shear stresses may combine at the ends of members, such as beams, it will be necessary to take this combination into consideration, along with the fact that in pre-tensioned reinforcement, the pre-stressing only produces its full effect from the transmission length.

Article 63. Deep beams

63.1 General

Deep beams are straight beams, typically with constant cross-section, and ratio between its span, l, and its total depth, h, is less than 2 in simply supported beams and 2.5 on continuous beams.

The span of a bay in deep beams shall be considered to be:

- The distance between centre lines of supports, if this distance does not exceed the free distance between the faces of the supports by more than 15%.
- 1.15 times the free span if in other case.

The Bernouilli-Navier hypothesis does not apply in this type of element; the method indicated in Articles 24 and 40 shall be used for their analysis.

63.2 Minimum width

The minimum width is restricted by the maximum value of the compression in the nodes and struts according to the criteria indicated in Article 40. Potential buckling outside their plane of compression fields shall be analysed where necessary, according to Article 43.

63.3 Simply supported deep beams

63.3.1 Dimensioning of the reinforcement

When the load is uniformly distributed and applied to their upper face, the model indicated in figure 63.3.1.a shall be used and the main reinforcement shall be analysed using as the position of the mechanical lever arm *z=0.6l,* for a tensile force that is equal to:

$$T_d = 0.2\ p_d = 1 = 0.4\ Road - A_s\ f_{yd}$$

with $f_{yd} \leq 400$ N/mm^2 (40.2).

The support node shall be verified using the model in figure 63.3.1.a

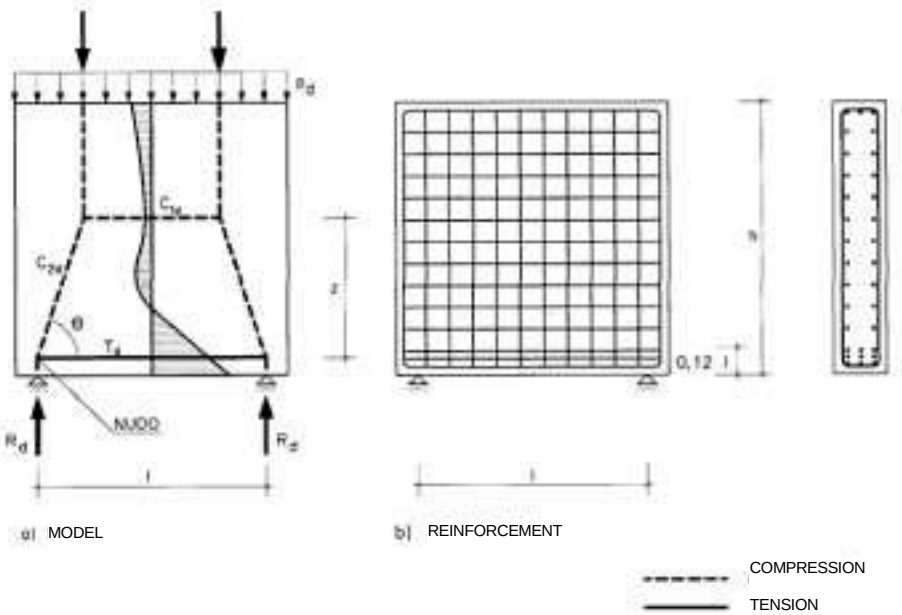

Figure 63.3.1.a

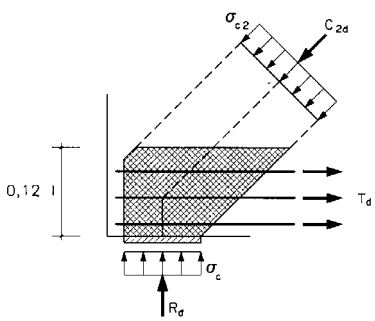

Figure 63.3.1 .b

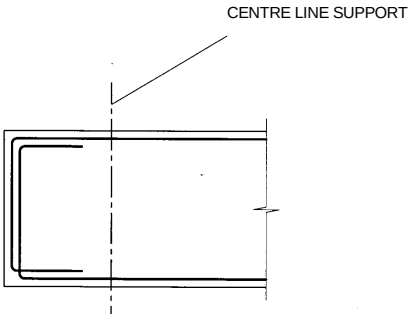

DETAIL OF ANCHORAGE OF THE BARS
IN THE MAIN REINFORCEMENT

Figure 63.3.1.c

A minimum reinforcement of 0.1% of the ratio in each direction and each face in the element, shall be provided in addition to the main reinforcement, corresponding to T_d.

Particular care shall be paid to the anchorage of the main reinforcement (see figure 63.3.1.c), the anchorage length of which shall lie between the support axis and the end of the member.

If necessary, additional reinforcement shall be provided on supports in accordance with Article 61.

63.3.2 Verifying of nodes and struts

When verifying nodes and struts, it is sufficient to check that the stress in the concrete in the support node is:

$$\frac{R_d}{ab} \leq f_{2cd}$$

in which:

a, *b* *D*imensions of the support

$f_{2c}d$ Compressive strength of the concrete.

$$f_{2cd} = 0{,}70\ f_{cd}$$

63.4 Continuous deep beams

In the case of a uniformly distributed load applied on the upper surface, the model is the one described in figures 62.4.a and b.

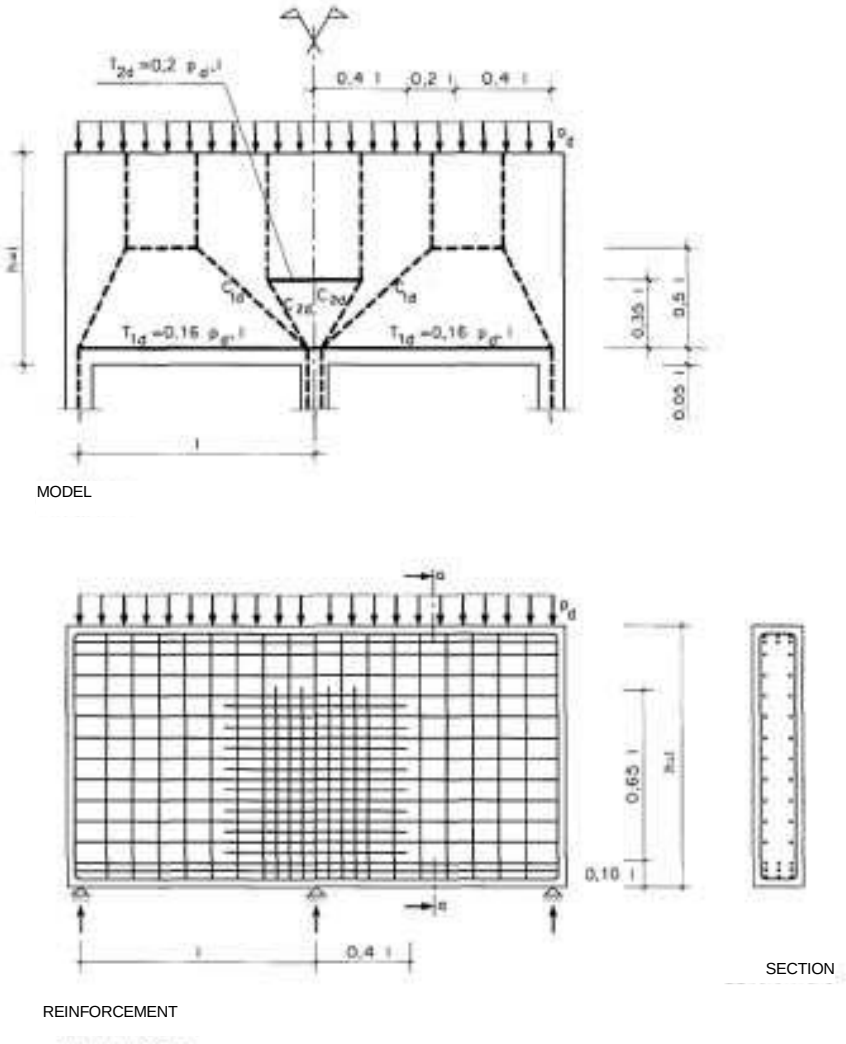

Figure 63.4.a

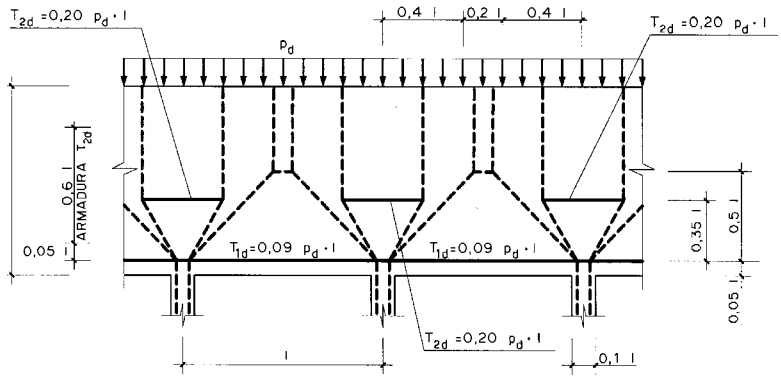

Figure 63.4. b

63.4.1 Dimensioning of the reinforcement

According to the models above, the reinforcement in the intermediate support zone in continuous beams of equal bays shall be designed for a tensile force of:

$$T_{2d} = 0{,}20\ p_d\ l = A_s\ f_{yd}$$

with $f_{yd} \leq 400$ N/mm^2 (40.2).

The lower reinforcement in end bays shall be designed for a force of:

$$T_{1d} = 0{,}16\ p_d\ l = A_s\ f_{yd}$$

with $f_{yd} \leq 400$ N/mm^2 (40.2).

The lower reinforcement in intermediate bays shall be designed for a force of:

$$T_{1d} = 0{,}09\ p_d\ l = A_s\ f_{yd}$$

with $f_{yd} \leq 400$ N/mm^2 (40.2).

A minimum reinforcement of 0.1% of the ratio in each direction and in each face of the element, shall be provided in addition to the main reinforcements indicated in the paragraph above.

In respect of the end supports, special attention should be paid to the anchorage of the reinforcement (see figure 62.3.1.c), which should have an anchorage length that lies between the support axis and the end of the member.

If necessary, additional reinforcements shall be provided in the support according to Article 61.

63.4.2 Verifying of nodes and struts

When verifying nodes and struts it is sufficient to check that the localized compression in supports is:

$$\frac{R_{ed}}{a_e\, b_e} \leq f_{2cd}$$

$$\frac{R_{id}}{a_i\, b_i} \leq f_{2cd}$$

in which:

R_{ed} Design reaction at an external end support.
R_{id} Design reaction at an internal support.
a_e, b_e Dimensions of the end support
a_i, b_i Dimensions of the internal support
f_{2cd} Compression strength of the concrete.

$$f_{2cd} = 0.70\ f_{cd}$$

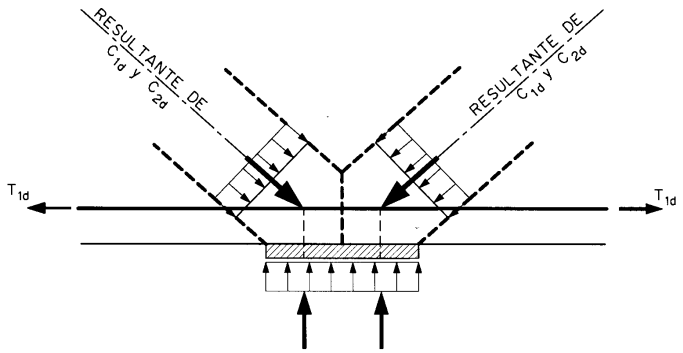

Figure 63.4.2

Article 64. Corbels and half supports

64.1 Corbels

64.1.1 Definition

Corbels are defined as a short cantilever beams in which the distance *a*, between the line of action of the main vertical load at load and the section adjacent to the support is less than or equal to the effective depth *d,* in that section (figure 64.1.1).

The effective depth d_1 measured in the external edge of the area where the load is applies shall be greater than or equal to 0.5*d*.

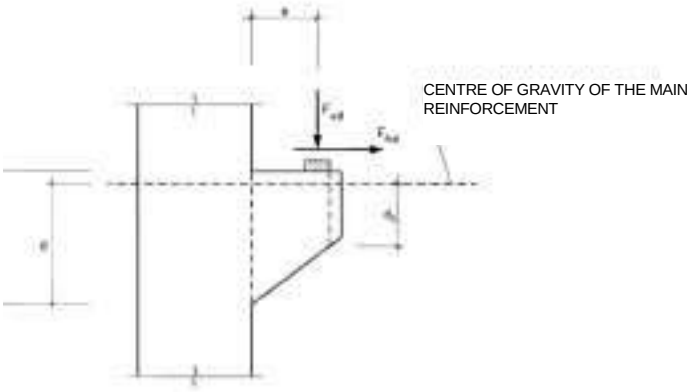

Figure 64.1.1

64.1.2 Verifying of the element and reinforcement dimensioning

Since it is a D region, the general analysis method indicated in article 24 shall be used.

Verifications on struts, ties and nodes and the characteristics and materials to be considered shall be as indicated in Article 40.

64.1.2.1 Verifying nodes and struts and design of the reinforcement

The equivalent lattice model indicated in figure 64.1.2 may be used.

The slope angle θ the diagonal compressions (struts) may, in accordance with the geometric and execution conditions, be assumed to be equal to the following values:

cotg θ = 1.4	if the corbel is monolithically concreted with the column. Various values of cotg θ may be adopted but they shall never be more than 2.0 subject to evidence in the form of theoretical or suitable experimental studies.
cotg θ = 1.0	if the corbel is concreted on top of the hardened concrete column.
cotg θ = 0.6	as for the previous case but if the hardened concrete has a low degree of surface roughness.

The effective depth *d* of the corbel (figures 64.1.1 and 64.1.2) shall satisfy the following condition:

$$d \geq \frac{a}{0{,}85} \, cotg\, \theta$$

64.1.2.1.1 Dimensioning of the reinforcement

The main reinforcement A_s shall be dimensioned for a design tension of:

$$T_{1d} = F_{vd}\, tg\theta + F_{hd} = A_s\, f_{yd}$$

with $f_{yd} \leq 400$ N/mm^2 (40.2).

Horizontal uniformly distributed hoops (A_{se}) shall be incorporated to absorb a total tension of:

$$T_{2d} = 0.20\, F_{vd} = A_{se}\, f_{yd}$$

with $f_{yd} \leq 400$ N/mm^2 (40.2).

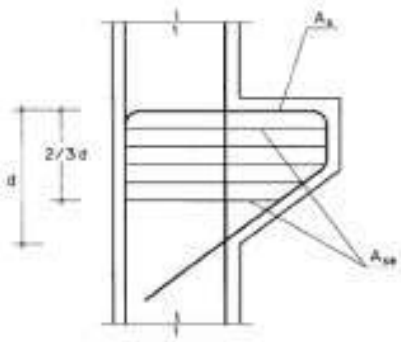

Figure 64.1.2.1.1

64.1.2.1.2 Verifying of nodes and struts

Provided the geometric conditions of 64.1.2.1 are satisfied, it is sufficient to check the localised compression at the support (node 1, figure 64.1.2).

$$\frac{F_{vd}}{b\,c} \leq f_{1cd}$$

In which:

b, c Dimensions in plan of the support.

f_{1cd} Compressive strength of the concrete.

$$f_{1cd} = 0{,}70\ f_{cd}$$

64.1.2.1.3 Anchorage of reinforcements

Both the main reinforcement and secondary reinforcements shall be suitably anchored at the ends of the corbel.

64.1.3 Suspended loads

If a corbel is subjected to a suspended load by means of a beam, (figure 64.1.3.a) various strut-and-tie systems shall be studied in accordance with Articles 24 and 40.

Horizontal reinforcement shall always be arranged near to the upper face of the corbel.

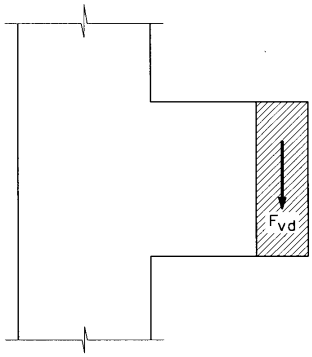

Figure 64.1.3.a

64.2 Half supports

Supports of this type are generally conflictive points where cracking and concrete degradation problems are concentrated; their use shall be avoided whenever possible.

If this type of solution is used, the necessary replacement supports and hence this load situation will have to be taken into consideration.

Because they have geometric discontinuity associated with a sudden change in section, and due a concentrated load acts upon them, beam half supports constitute a type D region; the strut-and-tie method will therefore need to be used. The complexity of the system increases in pre-stressed members because of the presence of the forces in the pre-stressed anchorages.

Article 65. Elements subjected to bursting forces

In those elements where a change in the direction of the forces occurs because of the geometry of the element, transverse tensile stresses may appear that must be resisted by reinforcement, in order to prevent failure of the cover (see figure 64). (see figure 65).

The binding reinforcement may be designed in general terms on the basis of the indications described in Articles 24 and 40.

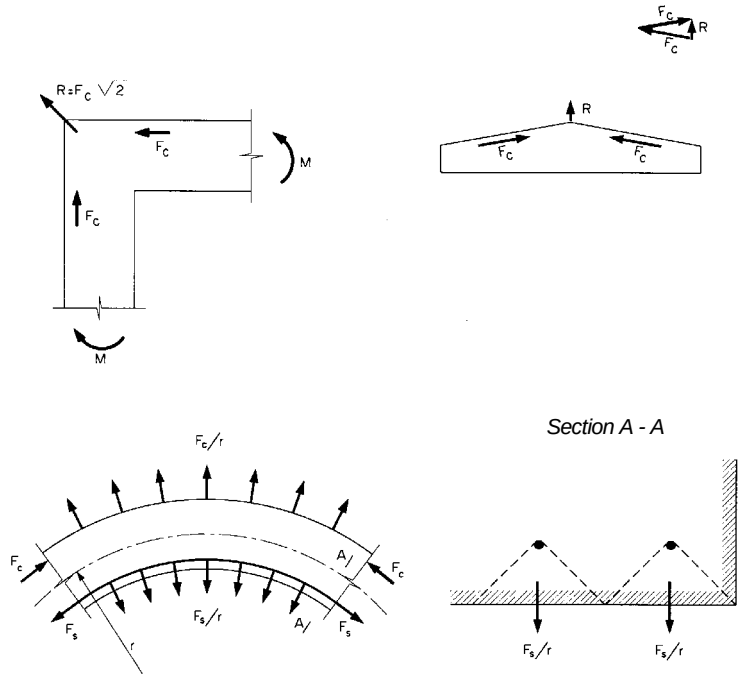

Figure 65

CHAPTER 13

CONSTRUCTION

Article 66. General criteria for the construction of the structure

66.1 Adaptation of the construction process to the design

The building of a concrete structure involves a series of processes that have to be carried out in accordance with what is set down in the design or, failing that, in this Code. In particular, special attention will be paid to adapting the procedures and successive construction processes to the building process foreseen in the design.

Any change to the construction processes laid down in the design shall be approved in advance by the Project Management.

66.1.1 Actions taken during the construction process

The processes used for constructing each new element in the course of the work may modify the actions having effect and the mechanical behaviour of the part of the structure already built.

Moreover, some processes, such as stripping, prestressing etc, may introduce actions that, in accordance with what is stated in Chapter 3 of this Code, should have been foreseen in the design.

66.2 Management of stocks of materials on site

The Constructor must have available a system for managing materials, products and other elements that are to be positioned in the course of construction so that their traceability is guaranteed. This system of management shall, as a minimum, have the following characteristics:

- it must include a register of suppliers, fully identifying both them and the materials and products supplied;
- it must include a system for storing the stocks on the site, and one that continues to enable every shipment or consignment that arrives at the site to be traced, if need be;
- it must include a system for registering and monitoring the constructed units that relates these to the shipments of products used and, if need be, to the consignments employed in the units so that traceability might be maintained while the construction work is in progress, and this in accordance with the level of supervision of the work defined in the design.

66.3 Environmental and promotion of sustainability considerations

Without prejudice to compliance with current environmental protection legislation, the Owners shall be able to specify that, during the construction work, account be taken of a series of environmental considerations with a view to minimising the potential impact of that work. If appropriate, this requirement should be included in an Annex forming part of the design and relating to the environmental evaluation of the structure. If the design does not provide for this type of requirement at the construction stage, the Owners will be able to enforce compliance

with such a requirement by introducing the relevant clauses into the contract with the Constructor.

In particular, the system for environmental management of the construction work shall, as a minimum, take account of the aspects dealt with in Article 77 and identify the corresponding environmental good practices to be followed while the construction work is being carried out. If the design has laid down requirements relating to the structure's contribution to sustainability, the construction work shall, in accordance with Annex 13 of this Code, be consistent with such requirements.

If some units of the construction work are subcontracted, the Constructor – understood as the principal contractor – shall ensure that the environmental requirements are complied with throughout the construction work.

Article 67. Actions to be taken prior to the start of the work

Before work is started on the structure, the Project Management will ensure that the Constructor takes the following steps:

- deposits the relevant order book, supplied by the Project Management, in the installations of the site;
- identifies the initially foreseen suppliers, as well as the rest of the agents involved in the construction work, and registers the information concerning them in the relevant directory, which is to be constantly updated until the work is completed;
- verifies the existence of the documentation guaranteeing the technical suitability of the equipment intended for use during the construction work, examples of such documentation being calibration certificates or documents defining the optimum welding parameters for welding equipment;
- verifies, if it is intended to use welding for the purpose of preparing the reinforcements for the construction work, that there are adequately qualified or authorised welders, and this in accordance with the requirements of this Code.

Furthermore, and in accordance with the criteria laid down in this Code, the Constructor shall first verify the conformity of the documentation for each of the products before they are used.

Before the work is begun, the Constructor must likewise verify that - as a consequence, for example, of the siting of new installations - there is no documentary evidence of substantial modifications that might involve alterations to the concrete structure initially planned.

With a view to securing the traceability of the materials and products employed in the construction work, the Constructor shall design and set up a system for managing the shipments and consignments received at the site, as well as the relevant stocks there.

Article 68. Processes prior to the placing of reinforcements

68.1 Siting of the structure

As the process of construction unfolds, the Constructor will ensure that the axes of the elements, the dimensions and the geometry of the sections of each structural element are in accordance with what is laid down in the design, taking into account the tolerances laid down in the design or, failing that, in Annex 11 of this Code.

68.2 Falsework and underpinning

Before using formwork in the construction, the Constructor shall be in possession of a design for it which, as a minimum:

- verifies its safety and limits the degree to which it may sustain deformation before and after the concreting;
- contains plans fully defining the falsework and its elements, and
- contains a sheet of regulations indicating the characteristics that, as required, need to be exhibited by metal sections, tubes, cramps, auxiliary elements and any other element forming part of the falsework;

Furthermore, the Constructor shall have a written procedure for assembling and dismantling the falsework or underpinning, specifying the requirements relating to its handling, adjustment, camber, load, unlocking and dismantling. It will also be verified that, with a view to its perhaps being necessary, there is a written procedure for positioning the concrete so that it is possible to limit deflection and subsidence.

Furthermore, the Project Management will have in its possession a certificate, supplied by the Constructor and signed by a natural person, guaranteeing that the elements actually employed in the construction of the falsework comply with the specifications defined in the corresponding sheet of technical requirements specific to the design.

In the case of prestressed concrete, the falsework shall be able adequately to resist the redistribution of loads that begins during the tensioning of the reinforcements as a consequence of the transfer of the prestressing forces to the concrete.

In the case of building structures, the falseworks will follow preferently the EN 12812. Distribution sills for supporting the shores will be available when the load will be transmited to the ground or to voided slabs. If the distribution sills rest directly on the ground, it will have to be ensured that they cannot subside into it. The shores will brace in both directions so that the shoring is capable of resisting the horizontal forces that may be produced when the slabs are constructed, using any of the following methods:

- Brazing the shores in both directions, i.e. with tubes or braces so that the shoring is capable of resisting the horizontal forces and at least 2% of the supported vertical-loads taking also into account the construction overload.
- Transmiting the loads to supports and walls, checking in this case that these element have enough bearing and stiffness capacity , or
- Installing falsework towers in both directions at the adequate distance.

When the floor slabs weigh more than 5 kN/m^2 or when the shores are more than 4 m high, a detailed study of the shoring, which shall appear in the design for the structure, will be carried out.

For the slabs, the secondary supports pieces will be positioned at the distances indicated in the implementation plans for the slabs, and this in accordance with what is stated in point 59.2.of the considerations prior to concreting.

On the slabs of reinforced joists will be placed the levelled shoring with the supports, and on these will be placed the joists. On the slabs of prestressed joists will be placed the joists, with the shoring being subsequently adjusted. The shores shall be able to transmit the force that they receive and, in the end, permit easy unshoring.

If case of bridges, it must be ensured that the distortions to the falsework during the process of concreting do not damage other parts of the structure that have been erected earlier. Furthermore, Annex 24 brings together recommendations relating to auxiliary construction elements in connection with the erection of structures of this type.

68.3 Formwork and moulds

The formwork and moulds must be capable of resisting the pressure to which they will be subject during the process of construction and must be rigid enough to be sure of complying with the tolerances specified in the design. Furthermore, it shall be possible for them to be withdrawn without this causing damage or abnormal shocks to the concrete.

In general, they shall present, as a minimum, the following characteristics:

- the joints between the formwork panels or in the moulds must be watertight, preventing possible leakages of water or grout through said joints;
- the formwork and moulds must be suitably resistant to the pressures exerted by the fresh concrete and to the effects of the compaction method;
- the formwork panels must be aligned and, if appropriate, vertical, with special interest attaching to the posts' continuing in a vertical direction at their junctions with the slabs in the case of building structures;
- the geometry of the mould and formwork panels must be maintained, and there must be no dents outside the tolerances laid down in the design or, if not in the design, in this Code;
- the interior surface of the moulds must be cleaned, so that there remains no type of residue from the work on assembling the reinforcements, such as the remains of wiring, trimmings, sockets etc;
- the features that permit specific textures in the surfacing of the concrete, such as bas-reliefs, impressions etc must, if appropriate, be maintained.

When it is necessary to use double formwork or formwork against the natural terrain - for example, in caisson section bridge decking, shell roofs, etc – it shall be guaranteed that the windows through which it is intended to carry out the subsequent operations of pouring and compacting the concrete are in working order.

If there are prestressed elements, the formwork and moulds shall allow the active reinforcements to be correctly sited and housed, with no impairment of the necessary watertightness.

In the case of very long elements, specific measures will be adopted to prevent undesirable movement during the phase of placing the concrete.

In the case of formwork, such as climbing formwork or sliding formwork, that is susceptible to movement during construction, it will be possible for the Project Management to require the Constructor, before the formwork is actually employed in the structure, to perform an operational test on a prototype, enabling behaviour during the construction phase to be evaluated. Such a prototype may, at the discretion of the Project Management, form part of a unit of construction.

The formwork and moulds may be of any material that does not impair the properties of the concrete. When they are of wood, they shall first be dampened to prevent them from absorbing the water contained in the concrete. Moreover, the pieces of wood will be arranged in such a way that they are able to stiffen freely, with no danger of abnormal forces or distortions being given rise to. It will not be possible to employ aluminium formwork unlessthe Project Management can be provided with a certificate, prepared by a supervisory body, to the effect that the panels employed have first been subjected to surface protection treatment to prevent them from reacting with the cement alkalis.

68.4 Stripping products

It will be possible for the Constructor to select the products used in order to facilitate form removal, unless these are specified by the Project Management. The products will be of an appropriate nature and will have to be chosen and utilised in such a way that they do not impair the properties or appearance of the concrete, do not affect the reinforcements or the formwork and do not produce effects harmful to the environment.

It will not be permitted to use diesel oil, standard grease or any other similar product.

Furthermore, the products shall not hamper the subsequent application of hardfacing or the possible construction of concreting joints.

Prior to their use, the Constructor will supply the Project Management with a certificate, signed by a natural person, stating the characteristics of the stripping product that it is intended to employ, together with its possible effects on the concrete.

The products will be applied in continuous and uniform layers to the internal surface of the formwork or mould, with the concrete having to be poured within the period of time within which the product is effective according to the certificate referred to in the previous paragraph.

Article 69. Construction, reinforcing and assembly processes for reinforcements

For the purposes of this Code, the following definitions shall apply:

- *structural ironwork:* the combined processes used to transform corrugated steel, supplied in bars or coils, as appropriate, such processes being intended for the manufacturing of passive reinforcements and, therefore, including the operations of cutting out, bending, welding, straightening etc.
- *reinforcement*: process whereby the ironwork is given its definitive geometric form through the use of constructed reinforcements or electrowelded meshes,
- *assembly*: process of positioning the reinforced ironwork in the formwork and so constituting the passive reinforcement – a process in which special attention shall be paid to the arrangement of separators and to compliance with the design's requirements regarding covers and with what is laid down to that effect in this Code.

As per 33.2, it will be possible for the reinforced ironwork to be produced, through application of the processes referred to in paragraph 69.3, either in an industrialised ironwork installation independent of the construction work or directly by the Constructor on the site itself.

The steel products employed in producing the passive reinforcements shall fulfil the requirements laid down in Article 32 in connection with said products. Likewise, reinforcements may also be produced through the transformation of electrowelded meshes, in which case the latter shall be in accordance with the relevant stipulations in this Code.

69.1 Supply of steel products for passive reinforcements

69.1.1 Supply of steel

Each consignment of steel will be supplied accompanied by the relevant supply sheet, the minimum content of which shall be in accordance with what is indicated in Annex 21 and will include the designation of the steel.

When the CE marking is in force, the steel included in each consignment will be identified in accordance with the provisions of the relevant version of UNE EN 10.080. As long as the CE marking is not in force for steel products, each steel consignment will be accompanied by a statement concerning the system of identification employed by the manufacturer, this being one of those permitted by UNE EN 10.080 and preferably registered with the Office for Harmonisation of the Internal Market, and this in accordance with Council Regulation (EC) No 40/94 of 20 December 1993 on the Community trade mark (http://oami.europa.eu).

The technical class will be specified in terms of any of the methods included in Section 10 of UNE EN 10.080 (for example, by means of a code identifying the type of steel in terms of coarsening or the lack of ribs or knurls). Furthermore, corrugated bars or wires shall, as appropriate, have the identification marks specified in the section referred to engraved, and said marks shall include information about the country of origin and the manufacturer.

If the corrugated steel product is supplied in coils or has been produced from straightening operations prior to its being supplied, this must be stated explicitly in the relevant supply sheet.

Where corrugated bars exist in connection with which, given the characteristics of the steel, special procedures - additional to or other than those referred to in this Code - are needed for the welding process, the manufacturer shall indicate what these procedures are.

69.1.2 Supply of electrowelded meshes and basic reinforcements electrowelded in a lattice

Each package of electrowelded meshes or basic reinforcements electrowelded in a lattice must arrive at the supply point (site, iron works or warehouse) accompanied by a supply sheet incorporating, as a minimum, the information referred to in Annex 21.

Likewise, each consignment shall, as long as the CE marking for steel products is not in force, be accompanied by a statement of the system of identification employed by the manufacturer, this being one of those permitted by UNE EN 10.080 and preferably registered with the Office for Harmonisation of the Internal Market, and this in accordance with Council Regulation (EC) No 40/94 of 20 December 1993 on the Community trade mark (http://oami.europa.eu).

As from the entry into force of the CE marking and in accordance with what is laid down in Directive 89/106/EEC (electrowelded meshes and basic reinforcements electrowelded in a lattice), these meshes and reinforcements shall, moreover, be supplied accompanied by the relevant documentation relating to the aforementioned CE marking, and this in accordance with what is laid down in Annex ZA of UNE EN 10.080.

The technical classes will be specified pursuant to Section 10 of UNE EN 10.080 and will consist of codes identifying the types of steel used in the meshes, with reference to the relevant coarsening or the lack of ribs or knurls). Furthermore, corrugated bars or wires shall, as appropriate, have the identification marks specified in the section referred to engraved, and said marks shall include information about the country of origin and the manufacturer.

69.2 Structural ironwork installations

69.2.1 General

The production of reinforcements by means of ironworking processes requires a number of installations to be available that enable the following activities, as a minimum, to be carried out:

- storage of the steel products used;
- the process of straightening, in the event of corrugated steel supplied in coils being used;
- processes of cutting out, bending, welding and reinforcement, as the case may be;

With a view to guaranteeing the traceability of the steel products used in industrial ironworks independent of the site, it will be possible for the Project Management to demand proof of such traceability.

Moreover, the ironworks shall possess a system of production control that includes tests and inspections of the manufactured reinforcements and reinforced ironwork, and this in accordance with 69.2.4, in which connection it shall possess an internal self-control laboratory - either one of its own or one with which it has a contractual arrangement.

In the case of ironwork installations involved in the construction, the Project Management will be responsible for receiving the steel products, and the corresponding tests will be carried out by the laboratory responsible for inspecting the work.

69.2.2 Machinery

In the case of corrugated steel supplied in coils, this will be straightened using purpose-built machines that enable straightening procedures to be carried out in such a way as not to alter the mechanical and geometrical characteristics of the material to the point of causing non-compliance with the requirements laid down in this Code. It will not be possible to use bending machines to straighten the steel.

Cutting operations may be carried out using manual bench shears or automatic cutting machines. Where cutting machines are used, it needs to be possible to programme the machine in such a way as to adapt it to the dimensions laid down in the relevant design. It will not be possible to use other equipment, such as flame-cutters, that may cause significant alteration to the physico-metallurgical properties of the material.

Bending will be carried out using manual or automated bending machines that are sufficiently versatile to employ the mandrils that enable compliance with the bending radii laid down by this Code on the basis of the diameter of the reinforcement.

Welding is carried out using any equipment that permits manual or gas-shielded arc welding or electric spot welding, and this in accordance with UNE 36832.

It will also be possible for other auxiliary machinery to be employed for producing the reinforcements, for example for automatically arranging the stirrups.

69.2.3 Storage and management of stocks

Ironwork installations will have, preferably in areas protected from bad weather, specific areas for storing the shipments of steel products received and the consignments of manufactured reinforcements or ironwork, and this in order to prevent possible damage to, or contamination of, said shipments and consignments.

For any of the processes carried out for the purposes of installing the ironwork, a system for managing the stocks – and preferably a computerised one - will be available that will, in every case, enable the stocks to be traced back to the manufacturer of the steel employed.

No steel that is pitted or that has an excessive level of oxidation that might affect its bonding capacities shall be used. Such conditions are understood to have been complied with when the section affected is no less than one per cent of the initial section.

69.2.4 Production control

The industrial ironwork installations independent of the site shall contain within them a production control system that takes account of all of the processes being implemented. Such production control will have, as a minimum, the following aspects:

a) internal controlof each one of the ironwork processes,
b) tests and inspections in connection with the self-controlof the manufactured reinforcements or, as the case may be, of the reinforced ironwork,
c) the existence of a self-control document listing the types of check, the frequency with which they have been carried out and the criteria for accepting what has been produced, and
d) the existence of a register for archiving and documenting all the checks carried out in terms of production inspection.

Self-control of the processes, to which point b) refers, will include, as a minimum, the following checks:

- Validation of the straightening process through the carrying out of tension tests in respect of each straightening machine. Two monthly tests will be carried out in respect of each machine on samples taken before and after the process, and this for a diameter (small, medium or large) for each of the series, as per UNE EN 10080, with which the machine operates. If only steel with an officially recognised quality mark is used, a test may be carried out just one a month. The diameters will be alternated consecutively until all of the diameters used by each machine have been tested, specifications included in 69.3.2 have to be satisfied.
- Validation of the cutting process through the measurement of reinforcements once they have been cut. At least five weekly measurements will be taken, corresponding to each machine in the case of automatic cutting and to each operator in the case of manual cutting. The measurements obtained shall be within the tolerances laid down in the design or, in this Code, if the design does not contains these specifiations..
- Weekly validation of the bending process in respect of each machine through the application of bending templates to, at least, five reinforcements corresponding to each machine.
- Validation of the welding process, be it resistant or non-resistant, through the carrying out on a quarterly basis of the checks laid down inSection 7.1 of UNE 36832.

In the event of the reinforcements being manufactured on site, the Constructor shall carry out a self-inspection, equivalent to that defined above, on the industrial installations independent of the site.

69.3 General criteria for structural ironwork processes

69.3.1 Quartering details

In the case of manufactured reinforcements or, as the case may be, of reinforced ironwork pursuant to the stipulations in 33.2, schemes for details of reinforcements, signed by a natural person responsible for the design in the ironwork installation, will be prepared. These schemes must reflect the geometry and specific characteristics of each of the various forms, indicating the total number of similar reinforcements to be manufactured and identifying the elements for which they are intended.

In no case may the forms of details entail a reduction in the reinforcement sections laid down in the design.

If the design defines a specific distribution of forms, this must be respected in the quartering of the ironwork installation unless the Project Management or the quality control body authorises in written document alternative arrangements concerning forms of reinforcement.

In other cases, the type of dismantling considered most appropriate and complying with what is laid down in the design, may be defined by the ironwork installation. The detailing will be presented in advance to the Project Management which, as appropriate, will be able to modify it within a period agreed at the beginning of the construction work and recommended to be no longer than a week.

The simultaneous use of differently designated types of steel must be avoided. When, however, there is no danger of confusion, two different types of steel may be used in one and the same element for the passive reinforcements: one for the main reinforcement and the other for the stirrups. In those exceptional cases in which it is not possible to prevent a situation in which, in the same section, two types of steel with different limits are put in place to perform the same structural function, what is laid down in 38.3 shall apply.

In the case of girders and similar elements subject to buckling, the bars that bend shall be properly enveloped by hoops or stirrups in the area of the bend. This arrangement is always to be recommended, whatever the element in question. When, in these areas, a large number of bars bend simultaneously, it is advisable to increase the diameter of the stirrups or to reduce the gap between them.

69.3.2 Straightening

When steel products supplied in coils are used, they must be straightened with a view to giving them a straight alignment. With this in mind, machines manufactured specifically for this purpose and complying with what is indicated in 69.2.2 will be used.

As a consequence of the straightening process, the maximum variation that is produced for distortion under maximum load shall be lower than 2.5%, Taking into account the results could be affected by the sample preparation method for testing, that has to be done in agreement with Annexe 23, it can be accepted processes with variations of $\varepsilon_{máx}$ greater than the indicated value in a 0,5%, provided the fulfilment of the specifications for reinforcement included in article 33. Moreover, the variation in height of the corrugation shall be lower than 0.1mm in the case of diameters smaller than 20 mm and lower than 0.05 mm in other cases.

69.3.3 Cutting

The bars, wires and meshes used in producing the reinforcements will be cut in keeping with the plans and instructions in the design, using manual procedures (involving shears etc) or specific automatic cutting machinery.

The cutting process shall not alter the geometrical or mechanical characteristics of the steel products used.

69.3.4 Bending

The passive reinforcements will be bent in advance of their placement in the formwork, and this in keeping with the plans and instructions in the design project. This operation will be conducted at room temperature by means of mechanical bending machines of constant velocity and with the help of mandrils, so that the curvature is constant throughout the area. Exceptionally, in the case of partially concreted bars, bending will, for manual procedures, be permitted as part of the construction work.

The straightening of bends, including of those supplied, will only be permitted when this operation can be conducted without causing immediate or future damage to the relevant bar. Likewise, a high number of bars must not be bent in one and the same section of the member, and this in order to avoid creating a concentration of stresses in the concrete that might ultimately prove dangerous.

If it proves to be essential to engage in unbending operations on the site, as for example in the case of awaited reinforcements for connection with reinforcements not yet constructed, unbending will be carried out in accordance with documented processes or criteria of implementation, its having to be shown that no fissures or fractures have been produced in the reinforcements. Otherwise, steps will be taken to replace the damaged elements. If the unbending is carried out on the spur of the moment, appropriate steps shall be taken not to damage the concrete with the high temperatures.

The minimum bending diameter of a bar must be such as to prevent excessive compression and cracking of the concrete in the area of curvature of the bar, with fractures of the bar caused by such curvature needing to be prevented. Unless otherwise indicated in the design, this will be achieved using mandrils of a diameter not less than those indicated in table 69.3.4.

Table 69.3.4
Minimum diameter of the mandrils

Steel	Hooks, pins and U hooks (see figure 69.5.1.1)		Bent bars and other curved bars	
	Diameter of the bar in mm		Diameter of the bar in mm	
	ø < 20	ø ≥20	ø ≤25	ø > 25
B 400 S B400SD	4ø	7ø	10 ø	12 ø
B 500 S B 500 SD	4 ø	7 ø	12 ø	14 ø

Hoops or stirrups of a diameter equal to, or less than, 12 mm may be bent with diameters lower than those indicated above, provided that this does not cause the start of cracks in such elements. To prevent such cracking, the diameter employed shall be neither less than 3 times the diameter of the bar, nor less than 3 centimetres.

Where there are electrowelded meshes, the aforementioned limitations also apply as long as the bending takes place at a distance equal to, or greater than, four diameters, counted from the nearest junction or instance of welding. Otherwise, the minimum bending diameter cannot be less than 20 times the diameter of the reinforcement.

69.4 Reinforcement of structural ironwork

69.4.1 Distance between the bars of passive reinforcements

The reinforcement of the structural ironwork will be in accordance with the geometries defined for the ironwork in the design project, there being reinforcements that permit a correct concreting of the member in such a way that the bars or groups of bars are completely enveloped by the

concrete, with account being taken, if appropriate, of the limitations that the use of internal vibrators might impose.

When the bars are positioned in separate horizontal layers, the bars of each layer shall be situated vertically one on top of the other so that the space between the resulting columns of bars permits the passage of an internal vibrator.

The following requirements are applicable to ordinary concreted construction works *in situ*. When the construction work concerned is provisional, or in special cases of construction (for example, when there are precast elements), it will be possible, subject to special justification and on the basis of the combined circumstances in each case, to evaluate the reduction in the minimum distances that are indicated in the following sections.

69.4.1.1 Isolated bars

Except in the cases indicated in 69.4.1, the clearance – horizontal and vertical – between two consecutive isolated bars will be equal to, or greater than, the larger of the following three values:

- 20 millimetres except in the case of prestressed joists and hollow-core slabs where a figure of 15 mm will be taken;
- the diameter of the larger;
- 1.25 times the maximum size of the aggregate (see 28.3).

69.4.1.2 Groups of bars

Two or more corrugated bars placed in longitudinal contact are referred to as a group of bars.

As a general standard, groups of up to three bars may be positioned as the main reinforcement. When the members concerned are compressed, concreted in a vertical position and of dimensions such that it is not necessary to place joints in the reinforcements, it will be possible for groups of up to four bars to be put in place.

In order, where the groups of bars are concerned, to determine the extent of the covers and the clearances in respect of the neighbouring reinforcements, the diameter of each group will be considered to be that of the circular section of area equivalent to the sum of the areas of the bars constituting it.

The cover s and clearances will be measured on the basis of the actual outline of the group.

In the groups, the number of bars and their diameters will be such that the equivalent diameter of the group, defined in the form indicated in the previous paragraph, will be no greater than 50 mm, except in the case of compressed members concreted into a vertical position, where the aforementioned limit may be increased to 70 mm. In the overlap areas, the maximum number of bars in contact in the splicing area will be four.

69.4.2 Pre-reinforcement operations

On occasions, the use of systems facilitating the subsequent reinforcement of the structural ironwork, for example through the additional arrangement of bars or auxiliary wires to permit the automatic arrangement of stirrups, may be enough. In no case will it be possible for such additional elements (bars, wires etc) to be taken into account as a reinforcement section.

Furthermore, such additional elements must comply with the specifications laid down in this Code where minimum covers are concerned, and this with a view to preventing subsequent problems involving corrosion of these very auxiliary elements.

69.4.3 Reinforcement operations

69.4.3.1 General considerations concerning the reinforcement

The structural ironwork may be prepared in an industrial installation independent of the site or as a part of the assembly of the reinforcement on the Constructor's own site, and such reinforcement will take place using tying procedures involving wires or through the application of non-resistant welding.

In any case, maintenance of the reinforcement must be guaranteed during normal operations of installing it in the formwork, as well as during the pouring and compaction of the concrete. Where reinforced structural ironwork is in an installation independent of the site, maintenance of its reinforcement must also be guaranteed during its transportation to the site.

Steel wire will be used for tying purposes and involve either manual tools or mechanical binders. Both the non-resistant welding and the tying involving wire may take place using cross unions or overlapping.

Independently of the procedure employed, the arrangement of the tying points will fulfil the following conditions, depending on the type of element:

a) Slabs and plates:

- all the bar junctions will be tied at the perimeter of the reinforcement;
- when the bars of the main reinforcement have a diameter no greater than 12 mm, the bar junctions will be tied in the rest of the panel in an alternative, staggered, manner. When the aforesaid diameter is greater than 12 mm, the tied junctions must not be at a distance from each other of more than 50 times the diameter, their being uniformly arranged on a random basis.

b) Supports and girders:

- all the corner junctions of the stirrups will be tied to the main reinforcement;
- when a bent electrowelded mesh forming the stirrups or pre-reinforced reinforcement is used for the automatic arrangement of stirrups, the main reinforcement must be tied to the corners at a distance no greater than 50 times the diameter of the main reinforcement;
- the main reinforcement bars that are not located in the corners of the stirrups must be attached to these at distances no greater than 50 times the diameter of the main reinforcement;
- multiple stirrups formed from other simple stirrups must be tied one to another.

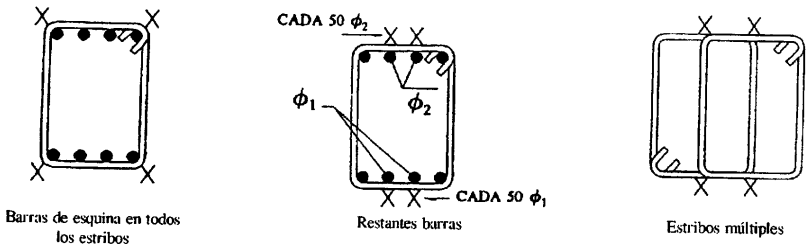

Key to figure:
CADA: EACH; Barras de esquina en todos los estribos: Corner bars in all the stirrups; Restantes barras: Remaining bars; Estribos multiples: Multiple stirrups

c) Walls:

- the bars will be tied at their intersections in an alternative, staggered, form.

69.4.3.2 Specific considerations concerning non-resistant welding

Non-resistant welding may take place through any of the following procedures:

- manual arc welding with coated electrode,
- semi-automatic gas-shielded arc welding,
- spot welding using electrical resistance.

The characteristics of the electrodes to be used in procedures a) and b) will be those indicated in UNE 36832. In any case, the parameters of the process shall be laid down using previous tests.

Moreover, the following criteria must be taken into account:

- the surfaces to be welded shall be properly prepared and free from rust, moisture, grease or any type of dirt,
- the bars to be joined will have to be kept at a temperature higher than 0°C in the welding area and must, if appropriate, be protected so as to prevent rapid cooling following the welding, and
- welding must not take place under adverse climatic conditions such as rain, snow or high winds. If need be, screens or similar protective features may be used.

69.5 Specific criteria for anchorage and splicing of reinforcements

69.5.1 Anchorage of passive reinforcements

69.5.1.1 General

The basic anchorage lengths *(l_b)*, defined in 69.5.1.2, depend on, among other factors, the bonding properties of the bars and the position occupied by these in the concrete member.

Depending on the position occupied by the bar in the member, the following cases may be distinguished:

- Position I: good bonding, in the case of reinforcements that, during the concreting, form with the horizontal an angle between 45° and 90° or if they form an angle smaller than 45°, are situated in the lower half of the section or at a distance equal to or greater than 30 cm from the upper facing of a concreted layer.
- Position II: inadequate bonding, in the case of reinforcements that, during the concreting, do not fall within any of the aforementioned categories.
- If dynamic effects may occur, the anchorage lengths indicated in 69.5.1.2 will be increased by 10 ø.

It will not be possible for the net anchorage length defined in 69.5.1.2 and 69.5.1.4 to adopt values lower than the largest of the following three:

- a)10ø;
- b)150 mm;
- c) a third of the basic anchorage length for tensioned bars and two thirds of said length for compressed bars.

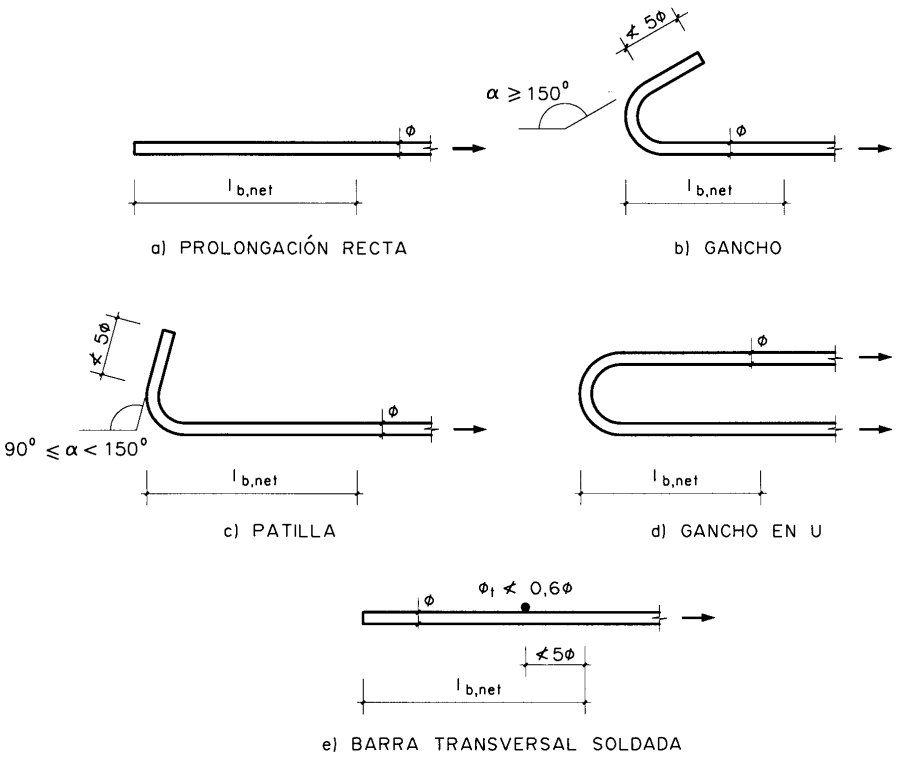

Key to figure: Prolongación recta: Straight elongation; Gancho: Hook; Patilla: Pin; Gancho en U: U hook; Barra transversal soldada: Welded transverse bar

Figure 69.5.1.1

End anchorages of the bars may take place through the standardised procedures indicated in figure 69.5.1.1 or through any other test-based guaranteed mechanical procedure capable of ensuring the transmission of forces to the concrete without danger to the latter.

In the case of girder end supports, at least a third of the reinforcement necessary for resisting the maximum positive moment shall continue as far as the supports; and at least a quarter in the case of intermediates. This reinforcement will extend from the axis of the support device at a magnitude equal to the corresponding net length of anchorage.

69.5.1.2 Anchorage of corrugated bars

This section refers to the corrugated bars that fulfil the statutory requirements laid down in this connection in Article 32.

The basic straight-elongation anchorage length in position I is that which is necessary for anchorage an $A_s f_{yd}$ force for a bar supporting an $\tau_{bd,}$, constant bonding stress in such a way that the following equilibrium equation is satisfied:

$$l_b = \frac{\phi \cdot f_{yd}}{4 \cdot \tau_{bd}}$$

where τ_{bd} depends on very many factors including the diameter of the reinforcement, the resistant characteristics of the concrete and the anchorage length itself.

If the bar's bonding characteristics are certified on the basis of the beam test described in Annex C of the UNE EN 10080, the value of τ_{bd} is that which appears in Section 32.2 of this Code, and the resultant basic anchorage length, obtained in simplified form, is:

- For bars in position I:

$$l_{bl} = m\,\varnothing^2 \geq \frac{f_{yk}}{20}\varnothing$$

- For bars in position II:

$$l_{bII} = 1{,}4\, m \varnothing^2 \geq \frac{f_{yk}}{14} \varnothing$$

where:

ø Diameter of the bar, in mm.

m Numerical coefficient, with the values indicated in Table 69.5.1.2.a dependent on the type of steel, obtained on the basis of the experimental results obtained for the purpose of testing the bonding of the bars

f_{yk} Guaranteed yield strength of the steel in N/mm^2.

l_{bI} *y* l_{bII} Basic anchorage lengths in positions I and II, respectively, in mm.

Table 69.5.1.2.a

Characteristic resistance of the concrete (N/mm^2)	m	
	B 400 S B400SD	B 500 S B 500SD
25	1.2	1.5
30	1.0	1.3
35	0.9	1.2
40	0.8	1.1
45	0.7	1.0
≥50	0.7	1.0

If the bonding characteristics of the bars are tested on the basis of the corrugations geometry pursuant to what is stated in the general method defined in Section 7.4 of UNE EN 10.080, the value of τ_{bd} is:

$$\tau_{bd} = 2{,}25 \eta_1 \eta_2 f_{ctd}$$

where:

f_{ctd} Tension resistance calculated in accordance with Section 39.4. For calculation purposes, no value greater than that associated with concrete of 60 N/mm^2 characteristic resistance will be adopted unless it is demonstrated by means of tests that the average bonding resistance may prove to be greater than that obtained with this limitation.

η_1 Coefficient related to bonding quality and the position of the bar during concreting.

η_1 = 1.0 for satisfactory bonding

η_1= 0.7 for any other case.

η_2 Coefficient related to the diameter of the bar:

η_2 = 1 for bars of diameter Φ≤32 mm.

$\eta_2 = \frac{132 - \phi}{100}$ for bars of diameter Φ>32 mm.

The net anchorage length is defined as:

$$l_{b,neta} = l_b \, \beta \, \frac{\sigma_{sd}}{f_{yd}} \cong l_b \beta \frac{A_s}{A_{s,real}}$$

where:

β Reduction factor defined in Table 69.5.1.2.b.

σ_{sd} Working stress of the reinforcement that it is intended to anchor, on the most unfavourable load hypothesis, in the section from which the anchorage length will be determined.

A_s Necessary reinforcement by calculation in the section from which the reinforcement is anchored

$A_{s,real}$ Actually existing reinforcement in the section from which the reinforcement is anchored

Table 69.5.1.2.b. Values of β

Type of anchorage	Tension	Compression
Straight elongation	- 1	1
Pin, hook and U hook	0.7 (*)	1
Welded transverse bar	0.7	0.7

(*) If the concrete covering perpendicular to the bending plane is higher than 3ø. Otherwise, ß = 1.

In any case, $l_{b,neta}$ will not be lower than the value indicated in 69.5.1.1.

69.5.1.3 Special rules in the case of bundles of bars

Wherever possible, the bars of a group will be anchored by straight elongation.

When all the bars of the bundle cease to be necessary in the same section, the minimum anchorage length of the bars will be:

1.3 l_b for groups of 2 bars

1.4 l_b for groups of 3 bars

1.6 l_b for groups of 4 bars

the anchorage length corresponding to an isolated bar being l_b.

When the bars of the bundle become unnecessary in different sections, the appropriate anchorage length, calculated in accordance with the following criterion, will be given to each bar:

1.2 l_b if accompanied by 1 bar in the section in which it ceases to be necessary;

1.3 l_b if accompanied by 2 bars in the section in which it ceases to be necessary;

1.4 l_b if accompanied by 3 bars in the section in which it ceases to be necessary;

taking account of the fact that in no case may the very ends of the bars be closer than length l_b (figure 69.5.1.3).

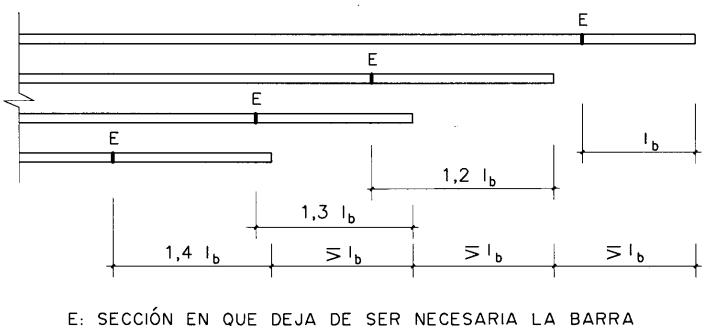

Key to figure:
Sección en que deja de ser necesaria la barra: Section in which the bar is no longer necessary

Figure 69.5.1.3

69.5.1.4 Anchorage of electrowelded meshes

The net anchorage length of the electrowelded meshes will be determined in accordance with the following formula:

$$l_{b,neta} = l_b \, \beta \frac{\sigma_{sd}}{f_{yd}} \cong l_b \beta \frac{A_s}{A_{s,real}}$$

the value indicated in the formulas given in 69.5.1.2 being l_b.

If there is at least one welded transverse bar in the anchorage area, the net anchorage length will be reduced by 30%.

In any case, the net anchorage length will not be lower than the minimum values indicated in 69.5.1.2.

69.5.2 Splicing of passive reinforcements

69.5.2.1 General

The splices between bars must be designed in such a way that the transmission of forces from one bar to the next is ensured, without spalling or any other type of damage to the concrete close to the joint area taking place.

No splices in addition to those indicated in the plans and those authorised by the Work Management will be available. It will be ensured that the splices are away from the areas in which the reinforcement is operating at its maximum load.

It will be possible to produce either lapped splices or soldered splices. Other types of splices are also accepted provided that the tests carried out on them demonstrate that these splices have a permanent resistance to breaking not less than that of the smaller of the two joined-on bars and that the relative slippage of the joined-on reinforcements does not exceed 0.1 mm for service loads (an unlikely situation).

As a general standard, the splices for the various tension bars of a member will be placed at such distance from each other that their centres are separated, in the direction of the reinforcements, by a length equal to, or greater than, l_b (figure 69.5.2.1).

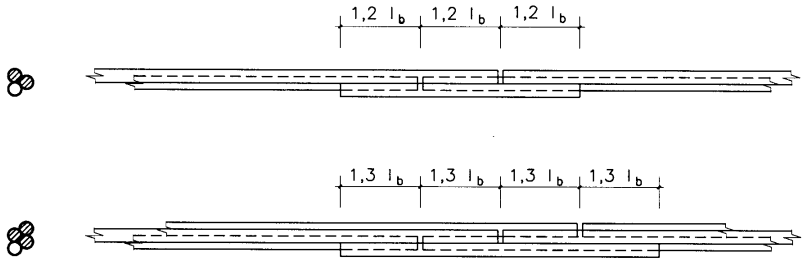

Figure 69.5.2.1

69.5.2.2 Lap splices

Splices of this type are made by positioning the bars one beside the other, leaving a gap of no more than 4ø between them. In the case of tension reinforcements, this separation will not be less than that laid down in 69.4.1.

The overlap length will be equal to:

$$l_s = \alpha \, l_{b,neta}$$

being $l_{b,neta}$, the value of the net anchorage length defined in 69.5.1.2 and α the coefficient defined in table 69.5.2.2, a function of the percentage of overlapped reinforcement in a section in relation to the total steel section of this same section, the transverse distance between splices (as per the definition in figure 69.5.2.2) and the type of force on the bar.

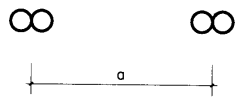

Figure 69.5.2.2

Table 69.5.2.2. Values of α

Distance between the nearest splices (figure 69.5.2.2.a)	Percentage of overlapped tension bars in relation to the total steel section					Overlapped bars operating on a normal, compresssed basis in any percentage
	20	25	33	50	>50	
a ≤ 10 ø	1.2	1.4	1.6	1.8	2.0	1.0
a > 10 ø	1.0	1.1	1.2	1.3	1.4	1.0

69.5.2.3 Lap splices for bundles of bars

In the case of the lapped splice of a bundle of bars, an additional bar will be added throughout the zone concerned for the splices of a diameter equal to the largest of those forming the group. Each bar will be abutted against the bar to be joined on. The separation between the various splices and the elongation of the additional bar will be 1.2 l_b or 1.3 l_b according to whether the bundles concerned are of two or three bars (figure 69.5.2.3).

Lapped splices are prohibited in the four-bar groups.

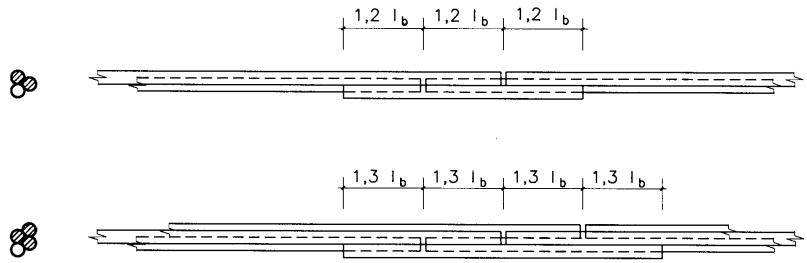

Figure 69.5.2.3

69.5.2.4 Lap splices for electrowelded meshes

Two overlap positions are considered, according to the way in which the meshes are arranged: coupled (figure 69.5.2.4.a) and overlapping or in layers (figures 69.5.2.4.b and 69.5.2.4.c).

A) Coupled lap meshes:

The overlap length will be *a* $l_{b,neat}$, the value quoted in 69.5.1.4 being $l_{b,neta}$ and the coefficient indicated in table 69.5.2.2 being α.

In the case of predominantly static loads, 100% overlap of the reinforcement in the same section is permitted. In the case of dynamic loads, 100% overlapping is only permitted if the entire reinforcement is in layer form; otherwise, 50% is permitted. In the latter case, the distance between the overlaps will be length $l_{b,neta.}$.

B) Overlapping lap meshes:

The length of the overlap will be 1.7 l_b when the separation between overlapped elements is greater than 10ø, increasing to 2.4 l_b when said separation is lower than 10ø.

In any case, the minimum overlap length will not be lower than the greater of the following values:

a) 15ø
b) 200 mm

Matters will be so arranged that the overlaps will be situated in areas in which the stresses on the reinforcement do not exceed 80% of the maximum possible stresses. The proportion of elements that may be overlapped will be 100% if just one mesh layer is arranged and 60% if various layers are arranged. In this case, the minimum distance between overlaps shall be 1.5l_b. With double bars of ø>8.5 mm, it is only permitted to overlap, as a maximum, 60% of the reinforcement.

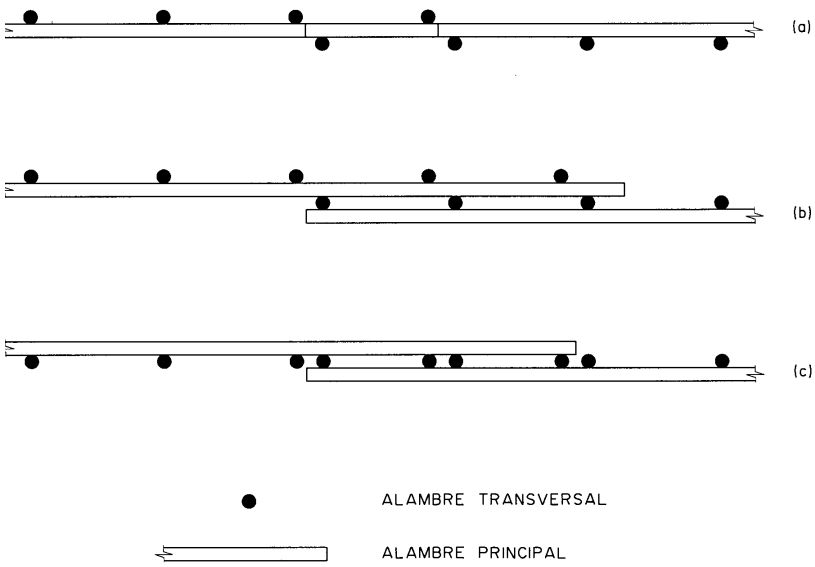

Figure 69.5.2.4

[**Key to figure:** alambre transversal – transverse wire; alambre principal – main wire]

69.5.2.5 Splices for resistant welding

Splices for resistant welding shall be produced in accordance with the welding procedures described in UNE 36832, and implemented by duly qualified workers.

The surfaces to be welded shall be dry and free from any material that might affect the quality of the welding, and all the criteria indicated in connection with the non-resistant welding in point 69.4.3.2 will also apply.

The welding of galvanised reinforcements or of reinforcements with epoxy coatings will be explicitly prohibited.

It will not be possible for welded splices to be arranged on deeply curved sections of the routing of the reinforcements.

It will be possible for bars of various diameters to be flush-welded as long as the difference between diameters is less than 3 millimetres.

It will not be possible for welding to take place in periods of high wind or when it is raining or snowing, unless due precautions are taken, such as the installation of protective screens or covers and unless the welding is adequately protected so as to prevent rapid cooling. Under no circumstances will welding take place on a surface that is at a temperature equal to, or lower than, 0°C immediately prior to the welding.

69.5.2.6 Mechanical splices

Splices produced by mechanical means must be so in accordance with the specifications of the design and the procedures indicated by the manufacturers.

The purpose of the requirements made of these types of splices is to guarantee that the behaviour of the joint area, both during and after it is in service, is similar to that which each one of the joined-up bars would produce in isolation.

In this respect, it is required that the splicing devices:

- have, as a minimum, the same resistant capacity as the smallest of the bars that are joined on;

- do not present a relative displacement greater than 0.1 mm under operating stress;
- join bars of the same diameter or, failing that, of consecutive diameters in the series of diameters, provided that the difference between the diameters of the jointed bars is less than, or equal to, 5 mm.
- are so employed that, after applying tension to the bars corresponding to 60% of the guaranteed unit failure load of the smallest bar, the residual elongation of the splicing device shall be less than, or equal to, 0.1 mm.

With joints of this type, there is no requirement to add a supplementary transverse reinforcement or to increase the covers (even if, for this purpose, the diameter of the joint or pipe joint is taken as the diameter of the reinforcement), since the concrete is not subject to additional requirements. It is therefore permitted to concentrate all these joints in one and the same section, as long as this does not affect the siting of the concrete.

69.6 Supply of assembled reinforcements and reinforced structural ironwork

The assembled reinforcements and, if appropriate, the reinforced structural ironwork must be supplied free from paint, grease or any other harmful substance that might have a harmful effect on the steel or concrete or on the bonding between the two.

They will be supplied to the site accompanied by the corresponding labels that render the steel unequivocally traceable and enable its characteristics to be identified, together with the component for which they are intended, and this in accordance with the dismantling to which point 69.3.1 refers.

Furthermore, they shall have to be accompanied by the documentation to which Article 88 of this Code refers.

69.7 Transport and storage

Both during its transport and during its storage, the constructed reinforcements, the reinforced structural ironwork or, if appropriate, the bars or coils of corrugated steel shall be protected adequately against the rain, dampness of the ground and possible agresivity of the surrounding atmosphere. Until such time as they are constructed, reinforced or assembled, they will remain duly classified so as to guarantee their necessary traceability.

69.8 Assembly of reinforcements

69.8.1 General

The reinforced structural ironwork will be assembled on site free from paint, grease or any other harmful substance that might have an effect on the steel or concrete or on the bonding between the two.

If the steel for the reinforcements has an excessive level of oxidation that might affect its bonding conditions, it will be verified that these have not been significantly altered. With this in view, brushing will take place involving a wire-pronged brush, and it will be verified that the reinforcement's loss of weight does not exceed 1% and that the bonding conditions are within the limits laid down in 32.2.

The reinforcements will, within the formwork or moulds, be secured against any type of displacement, their position being checked before the concreting is carried out.

The post hoops or girder stirrups will be fastened to the main bars through simple tying or another suitable procedure, with fastening by means of welding spots being explicitly prohibited when the structural ironwork is already situated within the moulds or formwork.

69.8.2 Arrangement of spacers

The specified position for the passive reinforcements and, especially, the nominal covers indicated in 37.2.4 shall be guaranteed through the arrangement of the corresponding elements (spacers or wedges) positioned on the site. These elements will comply with what is laid down in 37.2.5, their having to be arranged in accordance with the requirements set out in table 69.8.2.

Table 69.8.2 Arrangement of spacers

Component		Maximum distance
Horizontal surface elements (slabs, floor slabs, footings and foundation slabs, etc.)	Lower grid	50 ø ≤ 100 cm
	Higher grid	50 ø ≤ 50 cm
Walls	Each grid	50 ø or 50 cm
	Separation between grids	100 cm
Girders [1)]		100 cm
Supports [1)]		100 ø ≤ 200 cm

[1)] As a minimum, three planes of spacers per bay will be arranged in the case of the girders, and per length, in the case of the supports, coupled to the hoops or stirrups.

ø Diameter of the reinforcement to which the separator is coupled.

Article 70. Placing and tensioning of active reinforcement

70.1 Prestressing application systems

70.1.1 General

There are three distinct types of active reinforcement, according to the way in which they are positioned in the members:

a) bonding reinforcements;
b) bonding reinforcements in sheaths or ducts with bonding grout;
c) non-bonding reinforcements in sheaths or ducts with non-bonding grout.

For the purposes of this Code, application of the prestressing is understood to mean the combined processes carried out during construction with a view to place and tensioning the active reinforcements, independently of whether the reinforcements concerned are pre-tensioned or post-tensioned. All the elements of the system shall comply with what is laid down in their regard in Chapter 6 of this Code.

It will not be possible for prestressed steel with different characteristics to be used in one and the same tendon unless it is proved that there is no risk at all of electrolytic corrosion in such steel.

When they are put in place, the active reinforcements shall be very clean and without traces of rust, grease, oil, paint, powder, earth or any other material prejudicial to their proper conservation or bonding. They will not present any indications of corrosion, visible surface defects, welding spots, dents or other indentations.

Straightening of the active reinforcements on the site is forbiden.

70.1.2 Prestressing application equipment

If post-tensioned active reinforcements are applied, equipment and systems for their application shall bear the CE mark, within the compass of Directive 89/106/EEC, in accordance with what is laid down in the corresponding European Technical Approval (ETA) document, which satisfies the requirements of the ETAG 013 Guide.

In the case of prestressed reinforcements anchored by bonding, the tensioning shall be carried out on specific benches and by means of duly tested and calibrated devices.

70.2 Processes prior to the tensioning of active reinforcements

70.2.1 Supply and storage of prestressing elements

70.2.1.1 Prestressing units

The wires will be supplied in coils whose interior diameter will not be less than 225 times that of the wire and, being left free on a flat surface, will present a deflection of not more than 25 mm on a base of 1 m, at any point of the wire.

The coils supplied will not contain welds produced following the thermal treatment prior to the drawing out.

The bars will be supplied in straight pieces.

The cords of 2 or 3 wires will be supplied in coils whose interior diameter will be equal to, or larger than, 600 mm.

The cords of 7 wires will be supplied in coils, bobbins or reels which, unless otherwise agreed, will contain a single length of manufactured cord; and the interior diameter of the roll or of the core of the bobbin or reel will not be less than 750 mm.

The cords will have a deflection no greater than 20 mm on a 1 m base at any point of the cord, being left free on a flat surface.

The active reinforcements will be supplied protected from grease, dampness, deterioration, contamination etc, its being ensured that the body of the method of transport is clean and that the material is covered with canvas.

The prestressing units, together with the systems for applying them, shall be supplied to the site accompanied by the documentation to which point 90.4.1 refers.

To eliminate the risks of oxidation or corrosion, the prestressing units will be stored in ventilated premises and sheltered from the dampness of the earth and walls. The relevant precautions will be adopted in the store to prevent the material from getting dirty or any deterioration of the steel from taking place due to attack by chemicals or welding operations carried out nearby etc.

Before storing the active reinforcements, it will be checked that they are clean and without spots of grease, oil, paint, powder, earth or any other material harmful to their proper conservation and subsequent bonding. Furthermore, they must be stored carefully classified according to their types and classes and the batches they come from.

The condition of the surface of all the steel items may at any time be subject to examination before they are used, especially following prolonged storage on site or in a factory, and this with a view to ensuring that they do not show harmful alterations.

70.2.1.2 Anchorage and splicing devices

The anchorage and splicing devices will be positioned in the sections indicated in the design and shall be in accordance with what is indicated specifically for each system in the documentation accompanying the system's European Technical Approval (ETA) document.

The anchorages and splicing elements must be submitted properly protected so that they do not suffer damage during transport, handling on site and storage.

The manufacturer or supplier of the anchorages will confirm and guarantee their characteristics by means of a certificate sent by a specialist laboratory independent of the manufacturer, specifying the conditions in which they must be used. In the case of wedge

anchorages, the magnitude of the joint movement of the reinforcement and the wedge, through adjustment and penetration, shall, in particular, be shown.

They shall be accompanied by the corresponding documentation, enabling the original material and the treatments undergone by it to be identified.

They shall be kept properly classified according to size, and the necessary precautions will be taken to prevent them from corroding, becoming dirty or coming into contact with grease, non-soluble oil, paint or any other damaging substance.

Each consignment of anchorage and splicing devices supplied to the site shall be accompanied by the documentation for the CE marking in connection with the relevant prestressing system.

70.2.1.3 Sheaths and prestressing accessories

The characteristics of sheaths and prestressing accessories must be in accordance with what is specifically indicated for each system in the documentation accompanying the system's DITE (Document of Technical Suitability)

The sheaths and their accessories will be supplied and stored through the adoption of precautions similar to those indicated for the reinforcements. The acceptable level of corrosion must be such that the friction coefficients are not altered. Adequate means of provisional protection against corrosion will therefore be adopted.

70.2.1.4 Grouting materials

The product must be delivered bagged or in containers, with the identification and instructions for its use (type of product, security of handling etc) prepared by its manufacturer.

Compatibility and suitability need to be checked when various different products are used in the same grout.

The dosage used in the grouting grout shall be sanctioned by a number of assessment tests carried out in accordance with the following criteria:

- they will be carried out in respect of products, with the methods of manufacture and the thermal conditions being identical to those used to produce compounds for the construction work, and
- they will be carried out without any change to the way in which the cement is manufactured, and in respect of types and routings of tendon that are representative of those used in the construction work.

In the case of cables with significant dislevelment (vertical cables, for example), it is recommended that, in order to characterise on a real-size basis the exudation and filtration due to the spiral form of the strands and in order to validate the grouting procedure, the grouting test be carried out on a sample tendon in a transparent plastic tube in accordance with what is stated in paragraph C.4.3.3.2.1 of document ETAG 013.

In the case of construction work of modest size, use of a dosage of grout based on tests and previous references may be justified as long as the materials are not modified and that the conditions of use are comparable.

When a non-bonding product is used for the grouting, the correct means of transport, and injection, of the product shall be adopted in order to guarantee the safety of the operations and in order to ensure correct filling in the liquid phase without altering the physical and chemical properties of the product.

70.2.2 Placing of active reinforcements

70.2.2.1 Placing of sheaths and tendons

The actual path of the tendons will be adjusted in accordance with what is stated in the design, with the support points necessary for maintaining the reinforcements and sheaths

placed in their correct positions. The distances between these points will be such as to ensure compliance with the routing regularity tolerances indicated in Article 96.

The supports available for maintaining this routing shall be of such a kind that they do not give rise to fissures or leaks once the concrete has hardened.

Moreover, proper control will be exercised over the active reinforcements or their sheaths to prevent them from moving during the concreting and vibration, its being expressly prohibited to use the welding for this purpose.

The bending and positioning of the sheath and its fixing to the passive reinforcement must guarantee smooth routing of the tendon and, in order to prevent ripple, must follow the theoretical axis of the latter so as not to increase the coefficient of parasitic friction or cause unforeseen pressure on the vacuum.

The position of the tendons within its sheaths or ducts shall be appropriate, with recourse had, if need be, to the use of spacers.

When prestressed reinforcements are used, a small amount of prior stress needs to be applied to them and it needs to be verified that the spacers, end plates and wires are properly aligned and that the latter have become neither entangled nor snagged.

Before authorising the concreting and once the reinforcements have been put in place and, if need be, tensioned, it will be verified whether the position of the reinforcements, like that of the sheaths, anchorages and other elements, is in accordance with what is stated in the plans and whether the fastenings are adequate to guarantee their invariability during the concreting and vibration. If necessary, the appropriate corrections will be made.

The prestressing operator shall, in the case of each type of tendon, check the thicknesses and sheath diameters indicated in the design, together with the minimum radii of curvature, in order to prevent denting, guarantee that the frictional coefficients considered in the calculation are not exceeded and prevent ripping and crushing during tensioning, especially in the case of plastic sheaths.

70.2.2.2 Positioning of deflectors

The deflectors used in the exterior pre-tensioning systems have to satisfy the following requirements:

- support the longitudinal and transverse forces transmitted to them by the tendon and, in turn, transmit these forces to the structure, and
- ensure continuity between two straight sections of the tendon, without there being unacceptable angular discontinuities.

The deflectors will be positioned in such a way that the supplier’s instructions are followed strictly.

70.2.2.3 Distance between pre-tensioned active reinforcements

The separation between the pre-tensioned ducts or tendons will be such as to enable the proper positioning and compaction of the concrete and will guarantee correct bonding between the tendons or sheaths and the concrete.

The pre-tensioned reinforcements shall be positioned separately. The minimum free separation of the individual tendons, both horizontally and vertically, will be equal to, or greater than, the largest of the following values (figure 70.2.2.3):

a) 20 millimetres for the horizontal separation in all cases, except in the cases of pre-tensioned joists and hollow-core slabs where 15 millimetres will be taken, and 10 millimetres for the vertical separation;
b) the diameter of the larger;
c) 1.25 times the maximum size of the aggregate for the horizontal separation and 0.8 times for the vertical separation (see 28.3).

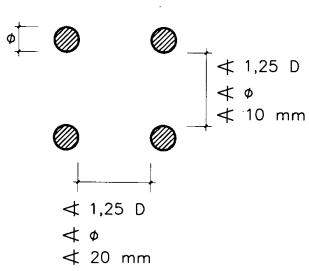

Figure 70.2.2.3

Where there are one-way floor slabs, the wires may be grouped in a vertical position as long as they are of the same quality and diameter, in which case the real perimeter of the reinforcements will be considered for the purpose of determining the extent of the covers and the clearances in respect of the neighbouring reinforcements.

70.2.2.4 Distance between post-tensioned active reinforcements

As a general standard, it is acceptable to position a variety of sheaths that form a group in contact with each other, the number concerned being limited to two horizontally and to no more than four in all. In this connection, the sheaths must be corrugated and, at each side of the sheaths as a whole, enough space must be left for a normal internal vibrator to be introduced.

The clearances between sheaths or groups of sheaths in contact with each other, or between these sheaths and the other reinforcements, must be at least equal to the greatest of the following values:

in the vertical direction:

a) the diameter of the sheath;
b) the vertical dimension of the sheaths or group of sheaths;
c) 5 centimetres;

in the horizontal direction:

a) the diameter of the sheath
b) the horizontal dimension of the sheath
c) 4 centimetres;
d) 1.6 times the largest of the dimensions of the individual sheaths that form a group of sheaths.

***70.2.3* Bonding of active reinforcements to concrete**

The length of transmission of a given reinforcement is defined, as is what is necessary for transferring to the concrete for bonding the prestressing force introduced into said reinforcement and, where the anchorage length is concerned, what is necessary for guaranteeing the resistance of the anchorage by bonding, until the steel breaks.

The lengths of transmission and anchorage depend on the bond stress between the steel and the concrete, such stress being in general determined on an experimental basis.

***70.2.4* Splices for active reinforcements**

The splices will be made in the sections indicated in the design and will be arranged in special sockets with enough length to enable them to move freely during the tensioning.

When the design assumes the use of pre-tensioning couplers, these will be situated away from the intermediate supports, its being avoided positioning them in more than half the tendons in the same cross-section.

70.3 Tensioning processes for active reinforcements

70.3.1 General

The tensioning shall be carried out in accordance with a previously established plan in which the recommendations of the manufacturer of the system used shall be taken into account. In particular, care will be taken to ensure that the jack rests perpendicularly and centrally on the anchorage. The tensioning will be carried out by qualified operators who have the necessary skills and experience. This operation will be carefully supervised and inspected, with the necessary safety measures being adopted to prevent any personal injury.

The tensioning, carried out at one or both ends of the element, in accordance with the established programme, will be such that the stresses increase slowly and progressively until they achieve the value stablished in the design.

If in the course of the tensioning one or more of the elements constituting the reinforcement should break, it will be possible to reach the necessary total tensioning force, increasing the stress on the remaining elements provided that to do this it is not necessary to increase the stress in each individual element more than 5% of the value initially plannedvalue. The application of greater stresses requires further study of the original design – study that will have to be carried out on the basis of the mechanical characteristics of the materials actually used. In all these cases, it will be necessary to carry out the relevant check on the piece or structural element that is being tensioned, taking account of the new conditions to which it is subject.

The total loss of prestressing force caused by the breakage of irreplaceable elements of the reinforcement should never exceed 2% of the total prestressing force indicated in the design.

70.3.2 Tensioning programme

The following must be explicitly stated in the tensioning programme:

A) Pre-tensioned reinforcements

- the tensioning order of the reinforcements and, if need be, the successive partial prestressing stages;
- the pressure or force that must not be exceeded in the jacks;
- the value of the tensioned load in the anchorages;
- the elongation that must be obtained, taking into account, if need be, the movement caused by wedge penetration;
- the method and sequence that shall be followed in order to release the tendons;
- the resistance required of the concrete at the time of the transfer of prestressing..

B) Post-tensioned reinforcements

- the tensioning order for the reinforcements;
- the pressure or force that must be exercised in the jack;
- the elongation provided for and the maximum wedge penetration;
- the time for removal the falsework during the tensioning, if appropriate;
- the concrete strength required befor e tensioning;
- the number, type and location of the couplers;
- the modulus of elasticity assumed for the active reinforcement;
- the theoretical coefficients of friction taken into account.

The tensioning will not begin without the prior authorisation of the Work Management, which will verify the suitability of the proposed tensioning programme, as well as the concrete strength,

such resistance having to be equal to, or higher than the stablished in the design to begin this operation.

70.3.3 Maximum initial stress permissible in reinforcements

In addition to other limitations that may be laid down in point 20.2.1, for the purpose of reducing various risks during construction (breakage of active reinforcements, low-stress corrosion, personal injury etc), the maximum value of the initial stress introduced into reinforcements σ_{p0} prior to anchorage them shall produce stresses that comply with the following conditions:

- 85% of the guaranteed characteristic maximum unitary load provided that, in anchorage the reinforcements in the concrete, a reduction in stress is caused, so that, following this reduction, the maximum value of the stress in reinforcements σ_{p0} does not exceed 75% of the guaranteed characteristic maximum unitary load, in the event of both the steel for active reinforcements and the prestressing operator possessing an officially recognised quality mark, and
- in the remaining cases, 80% of the guaranteed characteristic maximum unitary load provided that, in anchorage the reinforcements in the concrete, a reduction in stress is caused, so that, following this reduction, the maximum value of the stress in reinforcements σ_{p0} does not exceed 70% of the guaranteed characteristic maximum unitary load.

70.3.4 Re-tensioning of post-tensioned reinforcements

Re-tensioning is understood as any tensioning operation carried out on a tendon subsequent to the initial tensioning on it.

It is only justified when it is considered necessary for standardising the stresses on the various tendons in the same element or when, in accordance with the programme laid down in the design, the tensioning takes place in successive stages.

Re-tensioning with the only objective of reducing the deferred stress losses, must be avoided, unless required by special circumstances.

70.4 Processes subsequent to the tensioning of the active reinforcements

70.4.1 Grouting of sheaths in post-tensioned reinforcements

70.4.1.1 General

The main objectives of injecting the tendons are to prevent corrosion of the prestressed steel and to bring an effective bonding between the concrete and the steel.

In order to achieve this, it is a basic condition that all the cavities of the sheaths or ducts and anchorages be filled by an appropriate grouting material (Article 35) that fulfils the necessary requirements in terms of resistance and bonding.

The grouting must be carried out as soon as possible after the tensioning. If, for constructive reasons, it has to be deferred, the reinforcements will be protected on a provisional basis, using a method or material that does not hinder the tendons' subsequent bonding to the grouting product.

In order, moreover, to ensure that the tendons are injected correctly and safely, it is necessary:

- to have qualified and appropriately trained staff;
- to have sound and safe equipment, properly checked, calibrated and ready to be used;
- to have written instructions and a previous organisation of the materials to be used and the grouting procedure to be followed;
- to adopt the safety precautions appropriate to each case.

70.4.1.2 Preparation of the mixture

The solid materials used to prepare the grouting product shall be proportioned by weight.

The materials in question will be combined in a mixer capable of preparing a grouting product of uniform consistency and, if possible, of colloidal character. Mixing by hand is forbidden..

The period of the mixing depends on the type of mixer, and the mixing must be done in accordance with the manufacturer's instructions. At any event, it will not be less than 2 minutes or more than 4 minutes.

Following the mixing, the product must be kept in continuous movement until the time of grouting. It is crucial that the product be free from lumps at that time.

In the case of vertical sheaths or ducts, the water/cement ratio in the mixture must be somewhat higher than in mixtures intended for grouting in horizontal sheaths.

70.4.1.3 Grouting programme

The grouting programme must include, as a minimum, the following:

- the characteristics of the grout to be used, including the period of use and the period of hardening;
- the characteristics of the grouting equipment, including pressures and speed of grouting;
- cleaning of the ducts;
- sequence of the grouting operations and tests to be carried out on the fresh grout (fluidity, segregation, etc.).
- preparation of samples for tests (exudation, shrinkage, resistance etc).
- volume of grout that has to be prepared.
- instructions concerning actions to be taken in the case of incidents (for example, failure during grouting), or harmful climatic conditions (for example, during and after periods with temperatures lower than 5°C).

70.4.1.4 Implementation of the grouting

Before carrying out the grouting, it has to be shown that the following prior conditions have been met:

a) the grouting equipment is in operation, and an auxiliary grouting pump is available to prevent interruptions in the event of malfunctioning.
b) there is a permanent supply of water under pressure and of compressed air.
c) there are more than enough materials for mixing the grouting product;
d) the sheaths are free from harmful materials, for example water or ice;
e) the openings of the ducts to be injected are fully prepared and identified;
f) the tests for supervising the grout have been prepared;

In the event of the prestressing application equipment being in possession of an officially recognised quality mark, the Project Management will be able to dispense with the condition referred to in point a).

The grouting must be continuous and uninterrupted and with an advance velocity of between 5 and 15 metres per minute. The maximum length of grouting and the length of the nozzles will be defined by the relevant Document for European Idoneity for the prestressing system.

As general rule, for standard grouting a speed of 5 to 15 metres per minute; maximum lengths of 120 m will be injected, and bleed valves will be placed at the high points with a maximum separation of 50 m. In the case of special grouting, other parameters that will have to be justified through tests may be used.

It is prohibited to carry out the grouting using compressed air.

If possible, the grouting must be carried out from the lowest anchorage or from the lower pipe of the duct.

The grouting must be continued until the consistency of the mixture running out of the open end of the duct is equal to that of the injected product and, once the process has been concluded, the necessary measures must be taken to prevent losses of the mixture in the duct.

In the case of vertical sheaths or ducts, a small deposit must be placed in the upper part, which must be kept constantly full of paste in order to offset the reduction in volume that is produced. It is important that this deposit be situated in a centralised position above the duct in order to enabling the water ascending by exudation to mix with the mixture contained in the deposit and not to remain at the upper end of the sheaths – what would be dangerous in terms of protecting the tendon and the corresponding anchorage.

In cold weather and, especially, in freezing conditions, special precautions must be taken to ensure that, when the grouting commences, there is no ice in the ducts. With this in view, warm water – but never steam – must be injected.

If the temperature is not expected to fall below 5°C in the 48 hours following the grouting, the procces may continue, with the use of a product that is less sensitive to frost, that contains from 6% to 10% of occluded air and that fulfils the conditions laid down in Article 35; alternatively, the structural element can be heated in such a way that its temperature does not fall by 5°C during this period.

When the surrounding temperature exceeds 35°C, it is advisable to cool the water in the mixture.

Once the grouting has been concluded, the openings and bleed pipes must, in all cases, be hermetically sealed in such a way as to prevent water or any other agent likely to corrode the reinforcements from entering the ducts. Likewise, the equipment must be cleaned as quickly as possible after the grouting has been concluded, with the pump, mixer and pipes continuing to be dried carefully.

If there is the possibility of there being large non-injected areas, appropriate steps must be taken to have these areas injected subsequently. In case of doubt, a check using an endoscope may be carried out, or a vacuum created.

70.4.1.5 Safety measures during the grouting

During the grouting of the ducts, the operators who work nearby must be provided with protective glasses or transparent visors, half masks for the mouth and nostrils and gloves - all this in anticipation of possible escapes of the pressure-injected mixture.

The tubes used as breather pipes or weirs must not be looked through in order to check the progress of the grouting product.

When the grouting takes place on site, and there are people moving about in nearby areas, the appropriate precautions will be taken to prevent damage possibly being caused if the grouting product escapes.

70.4.2 De-tensioning of pre-tensioned reinforcements

De-tensioning is the operation through which, in the case of pre-tensioned reinforcements, the prestressing force is transmitted from the reinforcements to the concrete, and it takes place by releasing said reinforcements from their provisional end anchorages.

Before carrying out the de-tensioning, it must be checked that the concrete has achieved the strength necessary to support the stresses transmitted by the reinforcements, and all the obstacles capable of hampering the free movement of the concrete members shall be eliminated.

If the de-tensioning is carried out element by element, the operation must be conducted in a pre-established order with a view to preventing asymmetries that might prove harmful to the prestressing force.

Appropriate arrangements shall be made, enabling the de-tensioning to take place slowly, gradually and uniformly, with no sudden jolts.

Once the reinforcements have been freed from their end fastenings and once, too, the constraints that may exist between the successive members of each prestressing bed have been released, the end parts of the reinforcements that project from the heads of such members will be cut if these would otherwise be exposed, rather than embedded in the concrete.

Article 71. Manufacture and placing of concrete

71.1 General requirements

The structural concrete needs to be manufactured in plants with installations for:

- storing the component materials
- batching these, and
- mixing.

The concrete not manufactured in plants may only be used for non-structural purposes, in accordance with what is stated in Annex 18.

The component materials will be stored and transported in such a way that any type of intermixing, contamination, deterioration or other significant alteration to their characteristics will be prevented. Account will be taken of what is laid down in Articles 26°, 27°, 28°, 29° and 30° for such cases.

The batching of cement – of the aggregates and, if appropriate, of the additions – will be done by weight. The batching for each material shall be adjusted to what is specified in order to bring about appropriate uniformity between mixes.

The component materials will be mixed in such a way that an integrated and homogeneous mix is obtained, and, as a result, the aggregate should be properly coated with cement paste. The homogeneity of the concrete shall be verified in accordance with the procedure laid down in 71.2.4.

71.2 Installations for the manufacture of concrete

71.2.1 General

A concrete manufacturing plant will be understood to mean the combination of installations and equipment that, in compliance with the specifications contained in the following sections, extends to cover:

- storage of component materials
- batching installations
- mixing equipment
- transport equipment, if appropriate
- production control.

In each plant there will be an appropriately trained and experienced person responsible for manufacture who will be present during the production process and who will be separate from the person responsible for production control.

The plants may or may not belong to the work site own installations.

To distinguish one case from the other, prepared concrete is designated in this Code as that which is manufactured in a plant not belonging to the site's installations and that is registered in the Industrial Register in accordance with Title 4 of the Industry Act No 21 of 16 July 1992 and with Royal Decree No 697/1995 of 28 April, this registration being available to the applicant and to the competent administrations.

71.2.2 Stock management systems

The cement, aggregates and, if appropriate, the additions will comply with what is laid down in, respectively, Articles 26, 28 and 30, their having to be stored in a way that prevents their segregation or contamination.

In particular, the aggregates will be stored on an anti-pollutant base that prevents their contact with the ground. Stacks of separate granulometric fractions will be prevented from becoming mixed up by means of separating partitions or wide spaces between the fractions.

If installations exist for storing water or admixtures, they will be such as to prevent any contamination.

Powdery admixtures will be stored in the same conditions as the cement.

Liquid admixtures and powdery materials diluted in water must be stored in tanks protected from frost and possessing agitators for stopping the solids from sinking to the bottom.

71.2.3 Batching installations

The batching installations will have silos with suitable and separate compartments for each one of the necessary granulometric aggregate fractions. Each compartment of the silos will be designed and assembled in such a way that it can be unloaded efficiently, without jamming and with minimum segregation, on the hopper of the weighing machine.

The necessary means of controlshall exist to ensure that the supply of the materials to the hopper of the weighing machine can be cut off exactly when the desired quantity has been accumulated.

Weighing machine hoppers shall be constructed in such a way that they can be completely unloaded of all the material that has been weighed.

The indicator instruments shall be completely visible and sufficiently close to the operator to be read precisely while the hopper of the weighing machine is being loaded. The operator shall have easy access to all the controlinstruments.

Under static loads, the weighing machines shall have to be able to assess 0.5% of the total capacity of the scale of the weighing machine. In order to verify this, it shall have an adequate combination of standard calibration weights.

All the bearings, hinges and similar parts of the weighing machines shall have to be kept perfectly clean.

The water measurer shall be precise enough for the batching tolerance laid down in 71.3.2.4 not to be exceeded.

The equipment for measuring out admistures will be designed and marked in such a way that the quantity of additive corresponding to 50 kilograms of cement can be measured clearly. In case of installations with electronic weighting devices, in will be enough to have a computerized data base where, with a specific application, the data corresponding to the admisxtures dosing in different batches were authomaticly recorded.

71.2.4 Mixing equipment

Equipment may consist of fixed or mobile mixers capable of mixing the concrete components in such a way that a homogeneous and completely integrated mixture is obtained that is capable of satisfying the two requirements of Group A and at least two of the requirements of Group B, in table 71.2.4.

This equipment will be inspected with the frequency necessary for detecting the presence of concrete residue or hardened mortar, as well as imperfections in, or deterioration of, the blades or the interior surface. If need be, compliance with the aforesaid requirements will also be checked.

The mixers, both fixed and mobile, shall bear, in a prominent position, a metal plate specifying:

- in the case of the fixed mixers, the mixing speed and the maximum capacity of the drum, in terms of the volume of mixed concrete;
- in the case of the mobile mixers, the total volume of the drum, its maximum capacity in terms of volume of mixed concrete and the maximum and minimum rotation speeds;

Table 71.2.4

Verification of the homogeneity of the concrete. Satisfactory results will have to be obtained in the two tests in Group A and in at least two of the four tests in Group B

TESTS		Tolerated maximum difference between the results of the tests of two samples taken from the unloaded concrete (1/4 and 3/4 of the unloaded concrete)
GROUP A	1. Consistency (UNE-EN 12350-2)	
	If the average base is equal to, or smaller than, 9 cm	3 cm
	If the average base is greater than 9 cm	4 cm
	2. Strength (*)	
	In percentages in respect of the average	7.5 %
GROUP B:	3. Density of the concrete (UNE-EN 12350-6)	
	In kg/m^3	16 kg/m^3
	4. Air content (UNE-EN 12350-7)	
	As a percentage in respect of the volume of concrete	1 %
	5. Content of coarse aggregate (UNE 7295)	
	As a percentage in respect of the weight of the sample taken	6 %
	6. Granulometric modulus of the aggregate (UNE 7295)	0,5

(*) For each sample, two test cylinders 15 cm in diameter and 30 cm in height will be produced and tested under compression at the age of seven days. These test cylinders will be produced, preserved and tested according to the procedures referred to in Section 86.3. The measurement of each of the two samples will be determined as a percentage of the total average.

71.2.5 Production control

The prepared concrete plants must have a production controlsystem that takes account of all the processes being implemented in the plant, and this in accordance with what is provided for in the current regulations applicable.

In the event of the concrete being manufactured at a plant on the site, the Constructor shall carry out a self-inspection, equivalent to that defined above, on the prepared concrete plants.

71.3 Manufacture of concrete

71.3.1 Supply and storage of component materials

Each of the component materials used in manufacturing the concrete shall be supplied to the concrete plant accompanied by the supply documentation noted for that purpose in Annex no. 21.

71.3.1.1 Aggregates

The aggregates shall be stored in such a way that they remain protected from possible contamination by the environment and, especially, by the ground. The separate granulometric fractions must not be mixed in an uncontrolled way.

The necessary precautions shall also be adopted in order to eliminate segregation as far as possible, during both storage and transportation.

71.3.1.2 Cement

The cement will be supplied to, and stored in, the concrete plant in accordance with what is laid down in the specific regulations in force.

71.3.1.3 Additions

In the case of fly ash and silica fume supplied in bulk, equipment similar to that used for the cement shall be used, its having to be stored in waterproof receptacles and silos that protect them from dampness and contamination and its being fully identified in order to prevent possible dosing errors.

71.3.1.4 Admixtures

Powdery additives will be stored in the same conditions as the cement. When the admixtures are in liquid form or come from powdery materials, dissolved in water, the deposits shall, for storage purposes, be protected from frost. Any contamination will have to be prevented, and it will have to be guaranteed that there are no underlying deposits or material residue and that the uniformity of the entire additive is maintained.

71.3.2 Batching of constituent materials

71.3.2.1 General criteria

The concrete will be dosed in accordance with the methods considered appropriate, with respect always for the following limitations:

a) The minimum quantity of cement per cubic metre of concrete will be that laid down in 37.3.2.
b) The maximum quantity of cement per cubic metre of concrete will be 500 kg. In exceptional cases, subject to experimental justification and the express authorisation of the Works Management, it will be possible to exceed the aforesaid limit.
c) No water/cement ratio greater than the maximum laid down in 37.3.2 shall be used.

Such batching shall take account not only of the mechanical resistance and the consistency that has to be obtained but also of the type of environment to which the concrete is to be subjected, given the possible risks of damage to the concrete or the reinforcements as a result of attack by external agents.

In order to establish the dose (or doses, if various types of concrete are required), the Constructor shall have recourse, in general, to previous laboratory tests with a view to ensuring that the resultant concrete satisfies the conditions required by Articles 31 and 37, as well as what is specified in the specofic project technical specifications.

In the event of the Constructor being able to provide documentary justification that, with the materials, dosage and implementation process provided for, it is possible to obtain concrete that fulfils the requirements mentioned above and, in particular, that is of the required strength, the prior tests referred to may be dispensed with.

71.3.2.2 Cement

The cement will be batched by weight, with weighing machines and scales being used that are separate from those used in connection with the aggregates. The tolerance by weight of cement will be ±3%.

71.3.2.3 Aggregates

The aggregates will be batched by weight, account being taken of the corrections for humidity. For the purpose of measuring their surface humidity, the plant will have elements enabling this data to be obtained systematically, the method used involving the contrasting of data and being preferably automatic.

The aggregate shall be composed of at least two granulometric fractions, for maximum sizes equal to or less than 20 mm, and of three granulometric fractions for larger maximum sizes.

If a supplied total aggregate is used, the manufacturer of the aggregate must provide its particle size distribution and manufacturing tolerances, and this with a view to being able to

define a probable granulometric zone that ensures controlof the aggregates using the working formula.

The tolerance by weight of the aggregates, both in cases where separate weighing machines are used for each fraction of aggregate and where the dosing is on an accumulated basis, will be ±3%.

71.3.2.4 Water

The mixing water consists, basically, of that added directly to the mixture, that proceeding from the humidity of the aggregates and, if appropriate, that supplied by liquid admixtures.

The water added directly to the mixture will be measured by weight or volume, with a tolerance of ±1%.

In the case of mobile mixing installations (concrete mixers), any quantity of washing water kept in the tank so that it might be used in the following mixture shall be measured precisely. If this is impossible in practice, the washing water will have to be removed before the next mixture of concrete is loaded.

The total amount of water will be determined with a margin of ±3% of the pre-established total quantity.

71.3.2.5 Additions

When used, the additions will be proportioned by weight, with weighing machines and scales being used that are separate from those employed in connection with the aggregates. The tolerance, by weight, of additions will be ±3%.

71.3.2.6 Admixtures

Powdery admixtures shall be measured by weight, and admixtures in the form of paste or liquid shall be measured by weight or by volume.

In both cases, the margin will be ±5% of the weight or volume required.

Admixtures may be incorporated either in the plant or on the site. On some occasions, however, it may be appropriate to combine the two situations in order to obtain concrete with special characteristics.

71.3.3 Mixing of concrete

The concrete will be mixed using one of the following procedures:

- entirely in a fixed mixing installation;
- beginning in a fixed mixing installation and concluded in a mobile mixing installation, prior to its transportation;
- in a mobile mixing installation, prior to its transportation.

71.3.4 Designation and characteristics

Concrete manufactured in a plant may be designated in accordance with its properties or, exceptionally, in accordance with batching.

In both cases, the following shall be specified, as a minimum:

- consistency
- maximum size of the aggregate
- type of environment to which the concrete is to be exposed
- characteristic compressive strength (see 39.1), for concretes designated by its properties
- the cement content, expressed in kilos per cubic metre (kg/m^3), for concrete designated by dosage
- indication of whether the concrete will be used in plain, reinforced or pre-stressed form.

When the concrete is designated in accordance with its properties, the supplier will specify the composition of the concrete mixture, guaranteeing to the applicant the specified

characteristics of maximum aggregate size, consistency and characteristic strength, as well as the limitations derived from the type of specified environment (cement content and water/cement ratio).

Designation by properties will take place in accordance with what is stated in 39.2.

When the concrete is designated in accordance with its batching, the applicant is responsible for the consistency of the specified characteristics, namely maximum size of the aggregate and the consistency and the content of the cement per cubic metre of concrete; meanwhile, the supplier shall have to guarantee these characteristics, as well as state the water/cement ratio he has employed.

When the applicant requests concrete with special characteristics or characteristics in addition to those cited above, the guarantees and the data with which the supplier must provide him will be specified before supply commences.

Before beginning the supply, the applicant will be able to ask the supplier for a satisfactory demonstration that the component materials that are to be employed fulfil the requirements laid down in Articles 26°, 27°, 28°, 29° and 30.

In no case will additions or admixtures not included in Table 29.2 be employed without the knowledge of the applicant or the authorisation of the Project Management.

71.4 Transport and supply of concrete

71.4.1 Transport of concrete

For transporting the concrete, appropriate procedures will be used to ensure that the mortar arrives at the place of delivery in the stipulated conditions and without being subject to any appreciable variation in the characteristics it had by recent mixes.

The time that has elapsed between the addition of mixing water to the cement and to the aggregates and the placing of the concrete must not be more than an hour and a half, unless admixtures designed to delay the setting of the concrete are used. In hot conditions or in conditions that help the concrete to set quickly, the period shall be shorter unless special measures are adopted that, without harming the quality of the concrete, increase the setting time.

When the concrete is mixed entirely in the plant and is transported in mobile mixing installations, the volume of concrete transported shall not exceed 80% of the total volume of the drum. When the concrete is mixed, or completes the mixing process, in a mobile mixing installation, the volume will not exceed two thirds of the total volume of the drum.

The transportation equipment shall be free of concrete residue or hardened mortar, in which connection it will be carefully cleaned before a fresh batch of concrete is loaded. Likewise, the platforms or internal surfaces of the transportation equipment must not be damaged in such a way as possibly to affect the homogeneity of the concrete or to hamper compliance with what is stipulated in 71.2.4.

It will be possible for the concrete to be transported in mobile mixing installations, at agitation speed, or in equipment with or without agitators, as long as such equipment has smooth, rounded surfaces and is capable of maintaining the homogeneity of the concrete during transportation and unloading.

The transporting items will be cleaned in special wash basins that allow the water to be recycled.

71.4.2 Supply of concrete

Each load of concrete manufactured in a plant, whether or not it belongs to the site installations, will be accompanied by a supply sheet, the minimum content of which is stated in Annex 21.

The start of the unloading of the concrete from the supplier’s transportation equipment at the place of delivery marks the beginning of the period of delivery and receipt of the concrete, which will last until the concrete has been fully unloaded.

The Works Management, or the person delegated, is responsible for supervising receipt of the concrete and, to that end, takes the necessary samples, carries out the required controltests and follows the procedures indicated in Chapter 15.

Any rejection of the concrete based on the results of the consistency tests (and occluded air, as appropriate) shall be made during the delivery. It will not be possible to reject any concrete for these reasons unless the appropriate tests are carried out.

It is explicitly forbidden to add to the concrete any quantity of water or other substances that may alter the original composition of the fresh batch. However, if the settlement is smaller than that specified in 31.5, the supplier will be able to incorporate plasticizer or superplasticizer admixture in order to increase it until it reaches said consistency, without this exceeding the margins indicated in the section referred to and provided this operation is done following a written procedure approved by the concrete Manufaturer. With this in view, the transportation vehicle or, if appropriate, the construction plant shall be equipped with the relevant admixture dispenser system and shall re-mix the concrete until the admixture has completely dispersed. The re-mixing period will be of at least 1 min/m^3 and, at any event, of not less than 5 minutes.

The action taken by the supplier will cease once the concrete has been delivered and once the reception tests for the concrete have been completed satisfactorily.

In the agreements between the applicant and the supplier, account shall be taken of the time that, in each case, may elapse between the manufacture and placing of the concrete.

71.5 Placing of concrete

Except in cases when the reinforcements are in possession of an officially recognised quality mark and there is intense construction control, it will not be possible to place the concrete until the results of the relevant conformity verification tests are available.

71.5.1 Pouring and placing of concrete

In no circumstances will the placed batches that have begun to set be tolerated.

In the pouring and positioning of the batches, including when these operations are carried out continuously using appropriate ducts and pipes, due precautions will be taken to prevent the mixture from disintegrating.

No layers of concrete will be placed that are too thick to enable the batch to become fully compacted.

The concreting will not take place until the agreement of the Works Management has been obtained following controlof the reinforcements already placed in their definitive positions.

Each component will be concreted in accordance with a pre-established plan in which account will be taken of foreseeable distortions to the formwork and falsework.

71.5.2 Compaction of concrete

The concretes forming part of the construction work will be compacted by means of procedures appropriate to the consistency of the mixtures and in such a way that cavities are eliminated and the batch completely closed, and without segregation occurring. The compacting process shall continue until the paste flows back to the surface and air ceases to come out.

When surface vibrators are used, the thickness of the layer following compaction will not be greater than 20 centimetres.

Consideration shall be given to how best to use mould or formwork vibrators so that the vibration transmitted through the formwork is enough to produce proper compaction and to prevent the formation of less strong cavities and layers.

The revibration of the concrete will be the subject of approval by the Works Management.

71.5.3 Placing of concrete in special climatic conditions

71.5.3.1 Concreting in cold weather

The temperature of the batch of concrete, at the time of its being poured into the mould or formwork, shall not be less than 5°C.

It is forbithen to pour the concrete onto components (reinforcements, moulds etc) whose temperature is lower than zero degrees centigrade.

In general, the concreting will be suspended if it is anticipated that, within 48 hours, the surrounding temperature may fall to below zero degrees centigrade.

In cases in which, by absolute necessity, concreting takes place during frosty weather, the necessary steps will be taken to ensure that, while the concrete is setting and initially hardening, no local damage to the relevant features will occur, nor permanent appreciable impairment of the resistant characteristics of the material. If any type of damage is produced, the necessary tests on information (see Article 86°) shall be carried out in order to estimate the strength actually achieved, with the appropriate measures being taken if necessary.

The use of admixtures to speed up the setting or hardening processes or the use, in general, of any antifreezing product specific to concrete will, in every case, require explicit authorisation from the Works Management. It will never be possible to use products likely to attack the reinforcements, especially those containing chlorine ions.

71.5.3.2 Concreting in hot weather

When the concreting takes place in hot weather, the appropriate measures will be taken to prevent the mixing water from evaporating, in particular while the concrete is being transported, and to reduce the temperature of the batch. These measures shall be enhanced in the case of high-strength concretes.

With this in view, the materials constitutive of the concrete, together with the formwork or moulds designed to receive it must be protected from bleaching.

Once the concrete has been put in position, it will be protected from the sun and, especially, from the wind to prevent it from drying out.

If the surrounding temperature is higher than 40°C or if there is excessive wind, the concreting will be suspended unless, subject to the explicit authorisation of the Works Management, special measures are adopted.

71.5.4 Concreting joints

The concreting joints which shall, in general, be provided for in the design will be situated in as normal as possible a relation to the compression strengths and, hence, where their effects are least harmful, their being removed, to that end, from the areas in which the reinforcement is subject to strong tensions. They will be given the appropriate form, ensuring the most intimate as possible a link between the old and the new concrete.

When there is a need for concreting joints not provided for in the design, they will be put in places approved by the Works Management and, preferably, on the shores of the falsework. The concreting of these joints will not resume until they have first been examined and approved, if appropriate, by the Works Manager.

If a joint is not on the correct plane, the relevant portion of concrete will be demolished in order to give appropriate direction to the surface.

Before resuming the concreting, the surface layer of mortar will be removed, leaving the aggregates exposed, and any loose dirt or aggregate will be removed from the joint. In any case, the cleaning procedure used shall not produce appreciable alteration to the bonding between the paste and the thick aggregate. The use of corrosive products for cleaning joints is explicitly prohibited.

It is prohibited to engage in concreting directly on or against concrete surfaces that have suffered the effects of frost. In this case, the frost-damaged parts shall first be removed.

The project technical specifications will be able to authorise the use of other techniques for constructing joints (for example, impregnation with appropriate products), as long as it has first been verified, by means of adequate tests, that such techniques are capable of producing results that are at least as effective as those obtained when the traditional methods are used.

71.6 Curing of concrete

While the concrete is setting and initially hardening, its continuing humidity shall be maintained by means of appropriate curing. This will continue for the necessary period, depending on the type and class of cement, the temperature and level of humidity of the environment , etc. Curing will be possible by keeping the surfaces of the concrete elements damp, by means of direct watering that does not wash the concrete away. The water employed in these operations shall possess the qualities required by Article 27 of this Code.

Curing by dampening may be replaced by protecting the surfaces by means of plastic coverings, filmogenous agents or other appropriate treatments, as long as such methods, especially in the case of dry batches, offer the guarantees considered necessary for enabling the initial humidity of the batch to be maintained during the initial period of hardening and as long as the products concerned do not contain substances harmful to the concrete.

If special techniques (such as steam curing) are used, they shall, subject to authorisation by the Works Management, be used in accordance with the standards of good practice peculiar to such techniques.

Article 72. Special concretes

The Designer or Project Management shall be able to use or, if appropriate, authorise, at the proposal of the Constructor, the use of special concretes that may require specifications - additional to those indicated in the Article or specific conditions of use - such as enable the basic requirements of this Code to be satisfied.

When recycled concretes or self-compacting concretes are used, the designer or Project Management may be obliged to comply with the relevant recommendations compiled in, respectively, Annexes 15 and 17 of this Code.

Annex 14 contains a number of recommendations concerning the design and construction of concrete structures with fibres, while Annex 16 deals with concrete structures involving light aggregate.

When, moreover, there is a need to use concretes in non-structural elements, what is laid down in Annex 18 will apply.

Article 73. Formwork removal

Special attention will be paid to removing, if need be, any formwork or mould element that might hamper the free play of the retraction, seat or expansion joints, as well as of the hinges, if such exist.

The environmental conditions (for example, frost) will also be taken into account, together with the need to adopt means of protection once the formwork or moulds have been removed.

Article 74. Removal of falsework

The separate elements of the moulds or formwork (sides, bottoms etc), props and falsework will be removed without causing jolts or shocks to the structure, and it is recommended, when the elements are of a certain size, that wedges, gravel boxes, clamps or other similar devices be used to ensure that the supports are brought down in a uniform way.

The aforesaid operations shall not be carried out until the concrete has acquired the necessary strength to support, safely enough and without excessive distortions, the forces to which it will be subject during and after the formwork removal and stripping.

When the work concerned is on a large scale and no experience of similar cases is possessed, or when the damage that might be caused by premature fissuring is considerable, tests on information (see Article 86) will be carried out in order to estimate the actual strength of the concrete and to be able properly to establish the time of the formwork removal or stripping.

In the case of prestressed concrete elements, it is crucial for the Removal of falsework to take place in accordance with what is stated in the relevant programme that was provided for

that purpose when drafting the design for the structure. This programme shall be in accordance with that corresponding to the tensioning process. Particularly in the case of the prestressed bridges that are being stripped, at least partially, through the tensioning of the prestressed tendons, an assessment shall be carried out of the effects of the prestrained formwork on the structure in the process of dismantling that structure.

The unshoring or Removal of falsework periods indicated in this Article may only be changed if the Constructor drafts a plan in accordance with the available material resources, duly verified and establishing the appropriate means of supervision and safety. All this will be submitted for the approval of the Project Management.

The shoring will be removed, in the case of one-way slabs, starting at the centre of the span and moving out to the ends and, in the case of cantilevering, starting at the nosing and moving out to the springing. Shoring shall not be depleted or removed without the prior authorisation of the Project Management. Unshoring shall not take place suddenly, and precautions will be taken to prevent the straining pieces and shoring from having an effect on the floor slab.

Article 75. Surface finish

Once the formwork has been removed, the visible surfaces from the members or structures shall not present air pockets or irregularities that impair the behaviour of the structure or its exterior aspect.

When a particular grade or type of finish is required for practical or aesthetic reasons, the design shall specify the requirements either directly or by means of surface templates.

For the purposes of covering or filling the anchorage heads, openings, notches, mouldings etc – a process that must take place once the members have been fully dealt with – use will be made of mortar manufactured from batches similar to those used for the concreting of such members, but aggregates more than 4 mm in size will be removed from them. All the mortar surfaces will be finished appropriately.

Article 76. Precast elements

76.1 Transport, unloading and handling

In addition to the requirements derived from current transport regulation, account shall, where precast elements are concerned, be taken of, as a minimum, the following conditions:

- the support on the lorry bodies shall not exert forces on the elements not considered in the design,
- the load shall be tied so as to prevent unwanted movement,
- all the members shall be separated using appropriate elements so as to prevent the members from colliding during transport,
- if the transport takes place when the element concerned is very new, the latter shall be prevented from drying out during transportation.

For the purposes of unloading and handling on the site, the Constructor or, if appropriate, the supplier of the precast element shall use unloading methods appropriate to the size and weight of the element, taking special care that there is no loss of alignment or vertical status that could cause unacceptable stresses in the component. In any case, the instructions given by each manufacturer for handling the elements shall be followed. If any of the components is damaged in a way that might affect its bearing capacity, it will be rejected.

76.2 Stocks on site

If appropriate, matters will be arranged so that the stock areas are places large enough to enable stocks to be managed properly and without losing their necessary traceability, at the same time as its being possible for lorries and, if required, cranes to be manoeuvred.

The elements shall be stored on horizontal supports that are sufficiently rigid, given the characteristics of the ground and the dimensions and weight of the elements. Joists and hollow-core slabs shall be piled up, clean, on sleepers that will coincide in the same vertical and with, if appropriate, nosing no larger than 0.50 m and pile heights of no more than 1.50 m, unless another, higher figure is indicated by the manufacturer.

If appropriate, the joints, fastenings etc shall also be kept in a store so that their characteristics do not alter and the necessary traceability is maintained.

76.3 Assembly of precast elements

Precast elements shall be assembled in accordance with what is laid down in the design and, in particular, with what is laid down in the plans and details for the assembly schemes, with the sequence of operations of the implementation programme and with the assembly instructions supplied by the precast product manufacturer.

Depending on the type of precast element, it may have to be assembled by specialised, properly trained staff.

76.3.1 Joists and hollow-core slabs

76.3.1.1 Positioning of joists and hollow-core slabs

Shoring will take place in accordance with the relevant stipulations in Section 68.2 of this Code. Once the straining pieces have been levelled, the joists will be placed in position with the interaxle indicated in the plans and using the end beam-filling members. Once this phase is complete, the shoring will be adjusted, and the remaining hollow-core slabs will be placed in position.

76.3.1.2 Unshoring

The unshoring periods shall be those indicated in Article 74. In order to change these periods, the Constructor shall present to the Project Management for its approval an unshoring plan in accordance with the available material resources, duly verified and establishing the appropriate means of supervision and security.

The shoring will be removed, starting at the centre of the bay and moving out to the ends and, in the case of cantilevering, starting at the nosing and moving out to the springing. Shoring shall not be depleted or removed without the prior authorisation of the Project Management.

Unshoring shall not take place suddenly, and due precautions will be taken to prevent the straining pieces and shoring from having an effect on the floor slab.

76.3.1.3 Construction of partition walls

In constructing the partitioning components consisting of rigid walls, constructive solutions shall be adopted that are necessary to minimise the risk of the walls being damaged by the floor slab and the transmission of loads from the higher floors through the walls.

76.3.2 Other precast linear elements

When assembling precast girders, the appropriate measures shall be adopted to prevent the supports from slipping.

The design shall, if appropriate, include a study of the assembly of the precast elements that require provisional bracing in order to prevent possible problems of instability while the structure is being assembled.

76.4 Joints between precast elements

The joints between the separate precast members that constitute a structure or between such members and the other structural elements constructed *in situ* shall ensure that the forces between each member and those adjacent to it are transmitted correctly.

They shall be constructed in such a way that they can absorb the normal prefabrication size tolerances without giving rise to additional stresses or to the concentration of forces in the precast elements.

It will not be possible for the heads of the elements that are to be left in contact to present irregularities such as interfere with the compressions being transmitted evenly over the whole surface of the heads. The admissible limit for such irregularities depends on the type and thickness of the joint, and it is not permitted to try to correct these irregularities by filling the heads with cement mortar or any other material that does not guarantee the appropriate transmission of the forces without their being subject to excessive distortion.

Where soldered joints are concerned, care shall be taken to ensure that the heat given off does not cause damage to the concrete or to the reinforcements of the members.

Joints involving post-tensioned reinforcements require special precautions to be adopted if these reinforcements are short. The use of such reinforcements is to be recommended with a view to stiffening joints, and they are especially appropriate for structures that have to support seismic effects.

Where threaded joints are concerned, special attention shall be paid to the calibrations of the dynamometric equipment used and to ensuring that the opening stress applied to each screw corresponds to that specified in the design.

Article 77. Basic environmental aspects and good practices

77.1 Basic environmental aspects for construction

77.1.1 Generation of waste arising from the construction activity

When the construction phase generates residue classified as dangerous, the Constructor shall, in accordance with what is laid down in Order MAM/304/2002 of 8 February, separate it from the harmless residue, store it separately and identify clearly the type of residue and its date of storage, since it will not be possible for the dangerous residue to be stored for more than six months on the site.

The residue shall be removed from the site by authorised managers who, if appropriate, shall take responsibility for its recovery, re-use, controlled disposal etc.

Special attention shall be paid to the pouring away or disposal of chemical products (for example, battery liquids) or oils used in the site machinery. Equally to be prevented is the spilling of sludge or residue in connection with the washing of the machinery – sludge or residue that, frequently, may also contain solvents, grease and oils.

The residue shall be separated and stored separately, and the type of residue and its date of storage shall be identified clearly, it not being possible to keep the dangerous residue on the site for more than six months.

77.1.2 Atmospheric emissions

Particularly when the construction work is carried out close to urban areas, the Constructor will see to it that no dust is generated in any of the following circumstances:

- land movement associated with excavations,
- aggregate crushing or concrete manufacturing plants located on the site,
- stocks of materials

With this in view, the tracks and roads used by the machinery will be irrigated frequently, the speed of the machinery will be limited and, if appropriate, the consignments and stocks will be covered by suitable canvases. Where aggregate crushing installations are concerned, their activity will be planned in such a way that their period of use is kept to a minimum. The belts used for transporting the aggregate will be covered and, whenever possible, dust-collecting

elements or water sprayers will be used. In the case of concrete plants, the cement silos will have to contain filters that prevent the generation of dust as a consequence of pneumatic transport.

- Arrangements will be made to minimise the generation of gases proceeding from the combustion of fuels, and this by refraining from running the site machinery at excessive speeds, maintaining the machinery properly and, preferably, using machinery with catalysers.

Welding processes generate gases that, particularly if they are generated in confined places, may be toxic, which is why periodic analyses of the gases should be carried out. In any case, welding must be carried out where there is adequate ventilation.

77.1.3 Generation of waste waters from the cleaning of plants or elements for the transport of concrete

In the case of concrete-manufacturing plants, the water that has been used for washing their installations or the elements used for transporting the concrete will be poured onto specific, impermeable and adequately signposted areas. It will be possible for the water thus stored to be re-used as mixing water for the manufacture of the concrete, as long as it complies with the requirements to that effect set down in Article 27 of this Code.

As a general principle, there will be no cleaning on site of the elements used for transporting the concrete. If such cleaning is unavoidable, a procedure similar to that referred to previously in connection with construction plants shall be followed.

77.1.4 Generation of noise

The construction of concrete structures may generate noise, basically from one of the following sources:

- the machinery used during the construction,
- operations involving the loading and unloading of materials,
- aggregate treating or concrete manufacturing operations,

Noise usually has an impact that is difficult to prevent in the building of normal structures, and it affects both the staff on the site itself and those who live or engage in activities in its vicinity. Particularly when the construction in question is close to urban centres, the Constructor will therefore plan his activities in such a way as to minimise the periods in which they may generate noise and, if appropriate, in such a way that they are in accordance with the relevant bye-laws.

77.1.5 Consumption of resources

The Constructor will, if appropriate, arrange to use recycled materials, especially in the case of aggregate for the manufacture of concrete, and this in accordance with the criteria laid down in Annex 15 of this Code. Likewise, he will, whenever possible, have installations that permit the use of recycled water that has been employed for washing the elements used for transporting the concrete, and this under the terms indicated in Article 27.

77.1.6 Potential effects to soil and aquifers

Activities connected with the building of the structure may accidentally bring about situations in which environmental damage is caused both to the soil and to nearby aquifers. Such incidents may basically consist in the accidental spillage of concretes, oils, fuels, stripping

products etc. If such an incident occurs, the Constructor shall clean the affected ground and arrange for the relevant residue to be removed by an authorised manager.

If an accidental spillage should occur, it will, in particular, be ensured that the material concerned does not reach aquifers and hydrological catchment basins, the sea and drainage systems, and the necessary prior or subsequent measures will be taken to prevent this from happening (for example, the ground of the areas in which stocks of residue are kept might be made impermeable, or the necessary absorbent material might be laid). If a spillage does occur, the residue generated will be managed in accordance with point 77.1.1.

77.2 Use of environmentally sound products and materials

All the agents involved in building the structure (Constructor, Project Management etc) shall ensure that environmentally sound products and materials are used. The criteria for selecting these include the following:

- the materials concerned should be as durable as possible,
- require as little maintenance as possible,
- be simple, consist preferably of a single component,
- be easy to deploy and, if appropriate, to recycle
- be as energy efficient as possible,
- the materials concerned should be as healthy as possible both for those involved in the construction and for the users,
- the materials concerned should come from locations or stores as close as possible to the site, and this with a view to minimizing the impact of transportation.

77.3 Good environmental practices for the construction

In addition to the criteria established in the sections above, a series of good environmental practices may be identified, among which the following might be emphasised:

- it will be ensured that all the staff and subcontractors involved in the construction comply with the environmental requirements defined by the Constructor,
- the environmental criteria will be included in the contract with the subcontractors, and said contract will also define the liabilities to be incurred by the subcontractors if they fail to comply with the criteria,
- residue will be kept to a minimum and its re-use encouraged and, if appropriate,
- the storage of residue will be managed,
- plans will be made to employ, as soon as the construction work begins, an authorised manager to collect residue with a view to preventing unnecessary storage,
- there will be proper management of energy consumption on the site, with systems immediately put in place for measuring consumption, enabling the extent of this to be known as soon as possible; furthermore, the use of generator sets, which have a major environmental impact, will be avoided,
- if demolition of any part of the construction has to be resorted to, this shall take place through the use of deconstruction criteria that encourage classification of the corresponding residue and, thus, its subsequent recycling,
- fuel consumption will be minimised by restricting the speeds of the machinery and transportation elements on the site, by carrying out appropriate maintenance and by encouraging the use of low-consumption vehicles,

- the deterioration of materials contained in paper sacks, such as cement, will be prevented by means of a system of storage under cover that prevents their weathering and subsequent conversion into residue,
- the members comprising the formwork and falsework will be properly managed, and a situation prevented in which subsequent operations involving earth-moving machinery cause said members finally to be incorporated into the ground,
- stocks for the construction work will be organised in such a way that they are used as soon as possible and located as close as possible to the areas in which they are to be used in the construction work,
- the reinforcements will be assembled in specific areas so as to prevent the uncontrolled appearance of wires in those facings of the concrete element that correspond to the formwork bottoms.

CHAPTER 14

GENERAL BASIS FOR CONTROL

Article 78. General criteria for control

The Project Manager, representing the Owner, shall carry out sufficient control or inspections to allow it to assume compliance of the structure with the basic requirements for which it has been developed and designed.

When the Owner decides to carry out a control of the structural design, he may test its compliance in accordance with the provisions of Article 82.

The Project Manager shall carry out the following controls during the construction works:

- control of compliance with products supplied to the works, in accordance with Chapter 16
- control of structure construction, in accordance with Article 92, and
- control of the finalized structure, in accordance with Article 100.
-

This Code includes a series of checks that allow the above control to be carried out. Despite this, the Project Manager may also opt for:

- other control alternatives provided that they demonstrate, under its supervision and responsibility that they are equivalent and they do not lead to a reduction in the guarantee to the user:
- an equivalent control system that improves the minimum guarantees for the user laid down by the Articles, for example through the use of materials, products and processes possessing officially recognisable quality marks in accordance with the contents of Annex 19, which may be subject to the special considerations laid down for these in this Code.

In any case, it should be understood that the decisions arising out of the control shall be conditional upon effective operation of the work during its useful lifetime specified in the design.

The cost of the reception control included in the design shall be considered independently in the work budget, provided the applicable legislation permits it.

78.1 Definitions

For the purposes of the control activities covered by this Code, the following definitions apply:

- Batch: quantity of product with the same designation and source contained in the same unit of transport (container, tank, truck, etc.) and that is received at the work or in the place designed for its reception. In the case of concrete, batches are usually identified by the product or mixture units.
- Consignment: set of products from the same source, contained in the same unit of transport (container, tank, truck, etc.) and that is received in the place where reception is carried out.

- Stockpile: quantity of material or product from one or several batches or consignments that is stored together after arrival at the work until its final use. Material or product batch: quantity of material or product subject to reception as a whole
- Construction batch (lot): part of a work, whose construction is subject to acceptance as a whole.
- Control unit: set of activities, corresponding to the same construction process, that is subject to control for reception of a construction batch.

78.2 Quality control agents

78.2.1 Project Manager

On the application of its duties and acting on behalf of the Owner, the Project Manager shall fulfil the following obligations with regard to control:

a) approve a quality control plan for the construction work, which develops the control plan included in the design, and
b) supervise the development and validate the control activities in the following cases:
    - control of the reception of products used in the work,
    - control of construction, and
    - reception control of other products that reach the work to be processed in the installation relation to the work.

The Project Manager may also require any additional evidence of compliance by products used in any industrial installations that supply products to the work. It may also decide to carry out checks, sampling, tests or controls on the said products before they are processed.

In the building sector, these are the obligations of the Construction Manager under the terms of Article 13 of Law 38/1999 of 5 November of the Building Regulation.

78.2.2 Quality control bodies and laboratories

The Owner shall outsource the conduct of control tests to a laboratory that complies with the requirements set out in 78.2.2.1. It may also commission quality control organisations to carry out other technical service activities relating to the control of design, products or the construction processes used in the work in accordance with the provisions of 78.2.2.2. If appropriate, sampling may be outsourced to any of the agents to which this section refers provided they possess the corresponding certification, unless it is not required under the specific applicable regulations.

The quality control laboratories and organisations shall be able to demonstrate their independence from other agencies involved in the work. Beforehand, at the beginning of the work, they shall deliver a declaration to the Owner that is signed by a natural person possessing the required independence and that shall be included by the Project Manager in the final work documents.

78.2.2.1 Testing laboratories for control

Tests carried out to check the compliance of products on their reception at the work in accordance with this Code shall be outsourced to private or public laboratories with sufficient capacity and independent of other agents involved in the work. This independence shall not be a necessary condition in the case of laboratories belonging to the Owner.

Private laboratories shall support their capabilities by means of certification obtained in accordance with Royal Decree 2200/1995 of 28 December for corresponding tests or otherwise through certification issued by Autonomous Administration in the area of concrete and their inclusion in the general register is subject to Royal Decree 1230/1989 of 13 October.

Testing laboratories with sufficient capability and belonging to any Local Authority Directorate of Public Administrations with competencies in the field of building or public work may be used.

In the event that a laboratory is unable to carry out any of the tests required for the control using its own resources, it may subcontract it to a second laboratory following the approval of the Project Manager, provided the latter is able to demonstrate its independence and sufficient capacity in accordance with the provisions in this Article. In the case of laboratories situated in the work, these shall be linked to laboratories that are able to demonstrate their capability and independence, in accordance with the provisions of the previous paragraph in this section which shall be included in their corresponding quality system.

78.2.2.2 Quality control bodies

The product reception control, the construction control and, if applicable, the design control may be carried out with the technical assistance of quality control organisations with sufficient capability and independent from other agents involved in the work. This independence shall not be a necessary condition in the case of quality control organisations belonging to the Owner.

In the case of building works, the quality control organisation shall be those referred to in Article 14 of Building Law 38/1999. These organisations may justify their capability by means of certification issued by Autonomous Administrations for the control areas laid down in this Code.

A public quality control organisation with sufficient capability and belonging to any Local Authority Directorate with competencies in the field of building or public work may be also used.

Article 79. Conditions for the conformity of the structure

The structure shall be constructed in accordance with the design and the amendments authorised and documented by the Project Manager. During construction of the structure, the documentation required by regulations shall be drawn up and this shall include the documentation referred to in Annex 21 of this Code without prejudice to the provisions of other Regulations.

A representative of the agent responsible for the inspected activity or products (design Author, concrete Supplier, Supplier of reinforcement constructed, precast elements Supplier, Builder, etc.) may be present during all activities connected with reception and control. In the case of sampling, each representative shall be given a copy of the corresponding report. When any incident arises during reception as a result of non-compliant test results, the Supplier or, if applicable, the Builder, may request a copy of the corresponding control laboratory report, which shall be supplied by the Owner.

79.1 Control program and plan

The construction design for any concrete structure shall include in its memory report an annex with a control plan that identifies any check that may arise out of the plan, such as an evaluation of the total control costs, which shall appear as an independent chapter in the design budget.

Before beginning the control activities in the work, the Project Manager shall approve a control programme, prepared in accordance with the control plan in the design and considering the Builder's work plan. The control programme shall include at least the following aspects:

a) identifications of products and processes subject to control, defining the corresponding control batches and control units, describing in each case the checks to be carried out and the criteria to be followed in the case of non-compliance;
b) a forecast of materials and human resources required for the control with

identification of activities to be subcontracted, where appropriate,

c) the control programming, dependent on the Builder's self-control procedure and the work plan specified for its construction;
d) appointment of the person in charge of sampling, where appropriate; and
e) the control documentation system to be used during the work.

79.2 Conformity of the design

The aim of design control is to check compliance with this Code and with other applicable regulations, such as inspecting level of definition, design quality and all aspects that may affect the final quality of the design structure.

The Owner may decide on the implementation of the design control with the technical assistance of a quality control organisation as described in section 78.2.2.2.

79.3 Conformity of the products

The aim of the product reception control is to ensure that their technical characteristics meet those laid down in the design project.

If products require EC marking in accordance with Directive 89/106/EEC, their compliance may be tested by checking that the values declared in documents accompanying said EC marking it possible to deduce compliance with specifications laid down in the design and, otherwise, in this Code.

In other cases, the product reception control shall include:

a) control of documentation for supplies arriving at the work, carried out in accordance with 79.3.1,
b) if appropriate, control by means of quality marks, in accordance with 79.3.2 and,
c) if appropriate, control by means of tests in accordance with 79.3.3.

Chapter 16 of this Code includes some criteria for checking the compliance of products received at the work with this Code. Similarly, it also includes criteria for checking compliance of products that may be used for processing before their use where applicable.

In the exercise of its power, the Project Manager may order at any time additional checks or tests on product consignments or batches supplied to the work or on employees for the certification of compliance.

In the case of concretes with recycled aggregates, concretes with light aggregates and self-compacting concretes, compliance may be checked in accordance with complementary criteria set out in Annexes 15, 16 and 17, respectively.

79.3.1 Documentary control of supplies

The Suppliers shall deliver to the Builder any product identification document demanded by the applicable regulation or, if appropriate, by the design or Project Manager, and supply them to the Project Manager. Without prejudice to the additional provisions laid down for each product or other Articles in this Code, at least the following documents shall be supplied:

a) before supply:
   - compliance documents or administrative authorisations required by the regulation, including when documentation corresponding to EC marking is required for building products, in accordance with Royal Decree 1630/1992 of 29 December, which lays down provisions for the free circulation of building products in accordance with Directive 89/106/EEC,

- if applicable, a declaration by the Supplier signed by a natural person with sufficient power of representation that certifies that the product possesses an officially recognised quality mark at the same date,

b) during supply:

- supply sheets for each batch or consignment, in accordance with the provisions in Annex 21,

c) after the supply:

- a warranty certificate for the delivered product as referred to, in each, by the various sections of Chapter 16 of this Code, signed by the natural person with sufficient powers of representation in accordance with the provisions in Annex 21.

79.3.2 Acceptance control by means of quality marks

The Suppliers shall deliver to the Builder, who shall supply to the Project Manager, a copy obtained by a natural person of the certificates that shows that the supplied products possess an officially recognised quality mark in accordance with the provisions of Article 81.

Before the beginning of the supply, the Project Manager shall evaluate whether the documentation supplied is sufficient for the reception of the supplied product depending on the mark guarantee level and in accordance with the provisions of the design and as laid down in this Code or otherwise establish the tests to be carried out.

79.3.3 Acceptance control by means of testing

To check compliance with the basic requirements set out in this Control, it may be necessary, in certain cases to carry out tests in some products in accordance with the provisions in this Code or otherwise in accordance with specifications laid down in the design and ordered by the Project Manager.

If tests are carried out, the control laboratories shall provide their results together with measurement tolerances for a given level of confidence and also information on the dates on which the sample entered the laboratory and on which the tests were conducted.

The quality control organisations and laboratories shall deliver the results of their activities to the agent responsible for commissioning them and, in any case, to the Project Manager.

79.4 Conformity of the construction processes

During construction of the structure, Project Manager will inspect the construction of each part of the structure, checking its sitting, the products used and the correct construction and layout of construction elements. It should carry out any additional tests considered necessary to check compliance with that indicated in the design, the applicable regulations and orders from the Project Manager. It shall check that the necessary measures have been adopted to ensure compatibility between the various construction products, elements and systems.

The construction control shall include:

a) verification of the Constructor's production control, in accordance with 79.4.1, and
b) implementation of process inspections during construction, in accordance with 79.4.2.

79.4.1 Control of the construction by means of checking the production control of the Constructor

The Constructor is bound to define and develop a monitoring system that allows construction compliance to be checked. For this purpose, he should draw up a self-control plan that includes

all work activities and processes and incorporates, giving details, the envisaged performance programme that is to be approved by the Project Manager before beginning work.

The results of all checks carried out by means of self-control shall be recorded on physical or electronic media that shall be made available to the Project Manager. Each recording shall be signed by a natural person who has been appointed by the Constructor for the self-control of each activity.

During work, the Constructor shall maintain available to the Project Manager a permanently updated register showing the names of people responsible for carrying out self-control of each performance process at all times. Once the work has been completed, this register shall be incorporated in the final documentation on the work.

Depending on the construction control level, the Constructor shall define a stock management system sufficient to achieve the required traceability of products and elements positioned in the work.

79.4.2 Control of the construction by means of control of processes

The Project Manager, with the technical assistance of a control body, if appropriate, shall check compliance with the basic requirements laid down in this Code, carrying out spot controls of the construction processes where necessary, as laid down in the design, to ensure compliance with the requirements laid down in this Code or ordered by the Project Manager.

79.5 Checking of the conformity of the finished structure

Once the structure is completed, altogether or any of its stages, the Project Manager shall take steps to ensure that the load checks and tests required by any applicable regulations are carried out in addition to those established on a voluntary basis in the design or decided by the Project Manager, determining the validity of the results obtained where appropriate.

Article 80. Documentation and traceability

All activities relating to the control laid down in this Code shall be documented in the corresponding physical or electronic logs, which make available documentary evidence of all checks, test certificates and control procedures carried out, which shall be included in the final control documentation once the work is completed.

The registers shall be signed by the natural person responsible for carrying out control activities and, if present, by a person representing the product supplier or the supplier of the inspected activity.

The supplier sheets will be signed by a natural person with sufficient capability as the Supplier's representative.

In the case of electronic procedures, the signature shall be as laid down in Law 59/2003 of 19 December.

Structural compliance with this Code requires the carrying out of appropriate traceability among products permanently used in the work (concrete, reinforcements or precast parts) and any other product that has been used in its production.

When the design lays down a control whose construction is demanded for the structure, compliance with this Code also requires the carrying out of traceability for suppliers and product batches or consignments with each structural element carried out in the work. In this case, with the aim of achieving this traceability, the Constructor shall introduce a stock management system that is part of its activities, preferably by means of electronic procedures.

Article 81. Warranty levels and quality marks

Product and construction process compliance with the basic requirement laid down in this Code requires a set of specifications to be satisfied with a sufficient level of guarantee.

Products and processes may meet a warranty level higher than the minimum requirement on a voluntary basis by including systems (quality marks, for example) that certify that the quality systems and production control used comply with the requirements laid down for the granting of these said marks by means of the corresponding audit.

For the purposes of this Code, any warranty levels over and above the minimum laid down in the regulations may be demonstrated by any of the following procedures:

a) through possession of an officially recognized quality mark as laid down in Annex 19 of this Code,

b) in the case of products manufactured on site or processes constructed on the same site, by means of an equivalent system validated and supervised under the responsibility of the Project Manager, which guarantees similar warranties are complied with guarantees equivalent to those laid down in Annex 19 in the case of officially recognized quality marks.

This Code considers the application of certain special considerations during reception for products and processes with a higher level of warranty by means of any of the two procedures mentioned in the above paragraph.

Reception control shall take into account the warranties associated with possession of a mark, provided that this complies with certain conditions. In the case of construction processes and also of products that do not require EC marking under the terms of Directive 89/106/EEC, this Code also allows the application of certain special considerations on reception, when they bear a voluntary quality mark that is officially recognised by a Directorate with competencies in the area of buildings or public works or belonging to the local government of any European Union member State or any of the signatories of the agreement on the European Economic Space.

For the purposes of compliance with the basic requirements laid down in this Code, quality marks shall comply with the conditions laid down in Annex 19 to ensure official recognition.

Quality marks that have been subject to recognition or, as applicable, renewal or cancellation, may be entered in a specific register set up in the General Technical Secretariat of the Ministry of Development (Subdirectorate General on Standards, Technical Studies and Economic Analysis) that shall decide on its inclusion, if applicable, on the Permanent Concrete Council website (www.fomento.es/cph) for circulation and General.

CHAPTER 15

QUALITY CONTROL OF DESIGN

In the scope of this Code, construction products manufactured or legally marketed in the Member States of the European Union and by the signatories to the Agreement on the European Economic Area may be used, provided these products, complying the standards of any Member State, ensure safety and intended use in a level equivalent to that required by this Code.

This level of equivalence shall be accredited as provided in Article 4.2 or, where appropriate, Article 16 of Council Directive 89/106/EEC of 21 December 1988 on the approximation of laws regulations and administrative provisions of the Member States on construction products.

What stated in the preceding paragraphs shall also apply to construction products legally manufactured or marketed in a State which has an association agreement with the EU customs, when the Agreement recognizes for those products the same treatment as those manufactured or sold in a Member State of the European Union. In these cases the level of equivalence shall be established by applying for this purpose, the procedures laid down in this Directive.

Article 82. Control of the design

82.1 General

The Owner may decide to have an control of the design carried out by having a quality control body as described in section 78.2.2 with the aim of checking:

- that the works referred to in the design are sufficiently defined for construction; and
- that they comply with requirements laid down for safety, function, durability and environmental protection in this Code and also those laid down in any applicable regulations.

In works promoted by Local Authorities, the design control shall be carried out, if applicable, without prejudice to the provisions laid down by Royal Legislative Decree 2/2000 of 18 June, approving the revised text of the Law on Local Authority Contracts and its underlying regulations.

The fact that the Owner may conduct the design control does not assume any alteration to the attributions and responsibilities of the design Author under any circumstances.

82.2 Design control levels

When the Owner decides to carry out a design control, he shall choose one of the following levels:

a) normal control level
b) intensive control level

The control body shall identify the aspects to be checked and shall develop a control procedure, according to the type of work, which is set out in Annex 20 as a guide.

According to the level of control adopted, the checking frequency shall be at least as set out in table 82.2.

Table 82.2

Type of element	intensive level control		Notes V
	No.	intensive	
Ground plates	10%	20%	At least 3 ground plates
Foundations slabs	10%	20%	At least 3 squares
Pile caps	10%	20%	At least 3 pile caps
Piles	10%	20%	At least 3 piles
Containment walls	10%	20%	At least 3 different sections
Basement walls	10%	20%	At least 3 different sections
Winged walls	10%	20%	At least 1 of each type
Pillars and bridge piles	15%	30%	At least 3 sections
Load-bearing walls	10%	20%	At least 3 sections
Girder beams	10%	20%	At least 3 girder beams of at least 2 compartments
Rings	10%	20%	At least two rings
Decks	10%	20%	At least two compartments
Arches and vaults	10%	20%	At least one section
Plates	10%	20%	At least 3 plates
Stairways	10%	20%	At least two sections
Slabs	15%	30%	At least 3 squares
One-way floors	15%	30%	At least 3 lengths
Special elements	15%	30%	At least 1 per type

Note: Despite the above, 100% of elements subject to main torsion force and, in general, elements susceptible to fragile breaks or containing parts with possible no-load thrust, complex nodes, complicated changes in geometry or reinforcement, anchorage, etc.

82.3 Design control documentation

Whatever the level of control applied, the control body shall deliver to the Owner a report written and signed by a natural person, with an indication of his qualifications and duties within the body that shall show at least the following aspects in accordance with the control procedure adopted:

a) requesting Owner
b) identification of the quality control body or organisation signing the document
c) specific identification of the design subject to control
d) identification of control level adopted
e) control planning in accordance with the procedures adopted
f) checks carried out
g) results obtained
h) report on cases of non-compliance detected, indicating whether these refer to the appropriate definition of the design for construction or whether they affect safety, function or durability
i) evaluation of cases of non-compliance

j) conclusions, and in particular a specific conclusion for the presence of reserves that could lead to undesirable events if tendering for or constructing works

In view of the above report, the Owner shall take the appropriate decisions before the application to tender or, if appropriate, the construction of works. In the case of non-compliance, before taking decisions, the Owner shall notify the design Author of the contents of the control report and the latter shall:

a) rectify any non-compliance detected in the design control, or
b) submit a written report signed by the design Author that ratifies and support the solutions and definitions adopted in the design, adding any complementary document considered necessary.

CHAPTER 16

CONFORMITY CONTROL OF PRODUCT

Article 83. General

The Project Manager, acting on behalf of the Owner, is obliged to check compliance of products received at the work site, and in particular those that are to be permanently incorporated in the work, with the provisions in the design.

The activities relating to this control shall be set out in the control plan and shall comply with the provisions of 79.1

Article 84. General criteria for checking the conformity of the component materials of the concrete and its reinforcement

If products require EC marking in accordance with Directive 89/106/EEC, it will be sufficient to check conformity by carrying out a documentary check that the values declared in the documents accompanying the EC marking make it possible to deduce compliance with specifications laid down in the design.

In the exercise of its powers, the Project Manager may provide for the carrying out of checks or tests on materials used in processing the concrete supplied to the work at any time.

In the case of products without EC markings, the compliance check will include:

a) a documentary control
b) if appropriate, control by means of quality marks or procedures that guarantee an equivalent additional warranty level in accordance with the provisions of Article 81 and
c) if appropriate, an experimental control by carrying out tests.

Without prejudice to the provisions in this Code, the specific technical specifications may establish tests considered relevant.

84.1 Documentary control

In general, the supply of materials covered by this Article shall comply with the documentary requirements set out in 79.3.1.

If the supplier of the materials covered by this Article changes, it will be necessary to submit corresponding documentation for the new product.

84.2 Control of installations

The Project Manager shall establish the advisability of carrying out a control visit to the manufacturing installations for materials covered by this Article. This visit shall preferably be made before the start of the supply and its aim shall be to check eligibility for the manufacture and installation of production control in accordance with current legislation and with this Code.

In the same way, tests may be carried out on supplied materials with the aim of guaranteeing compliance with the required specifications.

84.3 Sampling and conduct of tests

If it is necessary to carry out reception tests, these shall be carried out by a control laboratory in accordance with the provisions in 78.2.2.1.

When sampling is not carried out directly on site or in the installation where the material is received, this shall be done through a quality control body or, if appropriate, by means of a test laboratory compliant with 78.2.2.1.

Article 85. Specific criteria for checking the conformity of the component materials of the concrete

For the purposes of this Article, the concrete components are all those materials considered for use in a raw material in the manufacture of concrete under the terms of this Code.

The control shall be carried out for the reception manager in the industrial precasting installation and in the concrete station where the concrete is ready-made or produced on site, except in the case of aggregates for self-consumption in work stations, where the control shall be carried out by the Project Manager.

85.1 Cement

Cement compliance should be checked in accordance with the specific current regulations.

85.2 Aggregates

Except in the case referred to in the above paragraph, aggregates shall be equipped with EC marking and their compliance should therefore be tested by means of documentary verification that the values stated in the document accompanying the EC marking allow compliance with the specifications laid down in the design and in Article 28 of this Code to be deduced.

In the case of self-consumed aggregates, the Manufacturer or, if appropriate, the Supplier of the concrete or precast elements, shall add a test certificate no older than three months, produced by an control laboratory in accordance with section 78.2.2.1 that demonstrated compliance of the aggregate with specifications laid down in the design and in Article 28 of this Code, with a statistical level of guarantee equivalent to that laid down for aggregates with EC marking in standard UNE EN 12620.

85.3 Admixtures

Compliance of admixtures with EC marking shall be checked by means of documentary verification that the values stated in the document accompanying the EC marking allow compliance with the specifications laid down in the design and in Article 29 of this Code to be deduced.

In the case of admixtures that are not equipped with EC marking because they are not included in harmonised standards, the Manufacturer or, if appropriate, the Supplier of the concrete or precast elements, shall add a test certificate no older than six months, produced by an control laboratory in accordance with section 78.2.2.1 that demonstrated compliance of the admixture with specifications laid down in the design and in Article 29 of this Code, with a statistical level of guarantee equivalent to that laid down for admixtures with EC marking in standard UNE EN 934-2.

85.4 Additions

Compliance of additives with EC marking shall be checked by means of documentary verification that the values stated in the document accompanying the EC marking allow compliance with the specifications laid down in the design and in Article 30 of this Code to be deduced.

85.5 Water

Exemption may be granted from tests when using potable water from the mains.

In other cases, the Project Manager or the Reception manager in the case of ready-made concrete or precasting installation stations shall carry out tests in a laboratory as those included in 78.2.2.1, in order to check compliance with specifications set out in Article 27 with a periodicity of six months.

Article 86. Control of the concrete

86.1 General criteria for the conformity control of concrete

Conformity of a concrete with that laid down in the design shall be checked during reception at the work and include its performance in relation to workability, strength and durability, in addition to any other characteristic laid down in the special technical specifications.

The reception control shall be applied to ready-made concrete as well to that manufactured in the work site station and shall include the set of documentary and experimental checks as indicated in this Article.

86.2 Sampling

Sampling should be carried out in accordance with UNE EN 12350-1 and may be attended by representatives of the Project Manager, the Constructor and the concrete Supplier.

Except in the above cases, the sampling shall be carried out at the concrete pouring point (work or precasting installation), at the corresponding transport and output and between ¼ and ¾ of the load.

The laboratory representative shall issue one certificate for each sample, which shall be signed by all parties present, a copy of the certificate being given to each. The certificate shall be drawn up in accordance with a model approved by the Project Manager at the beginning of the work, whose minimum contents are set out in Annex 21.

The Constructor or concrete Supplier may require a countersample to be taken at its own expense.

86.3 Testing

In general, the specification in this Code for set concrete shall be checked by means of tests carried out after 28 days of ageing.

Any concrete tests other than those laid down in this section shall be carried out in accordance with provisions laid down for this purpose in the technical specifications or in accordance with instructions of the Project Manager.

For the purpose of this Code, any measurable property of a mixture shall be expressed by the average value of a number of measurements greater than or equal to two.

86.3.1 Tests on the workability of the concrete

Concrete workability shall be checked by measuring the consistency of fresh concrete by the slump method in accordance with UNE EN 12350-2. In the case of self-compacting concretes, this shall be as indicated in Annex 17.

86.3.2. Tests on the strength of the concrete

The strength of concrete shall be checked by means of compressive strength tests carried out on specimens manufactured and cured in accordance with UNE-EN 12390-2.

All the calculation methods and specifications in this Code shall refer to the properties of set concrete obtained by means of tests on cylindrical specimens measuring 15x30cm. Despite this, also may be used to determine compressive strength:

- cubic samples measuring 15 cm per side, or

- cubic samples 10 cm per side, in case of concretes with $f_{ck} \geq 50$ N/mm^2 , provided maximum size of aggregate being below 12 mm.

In these cases, the results shall be adjusted by the corresponding conversion factor in accordance with:

$$f_c = \lambda_{cil,cub15} . f_{c,cúbica}$$

where:

f_c Compressive strength in N/mm^2,with cylindrical specimen measuring 15x30cm.

$f_{c,cúbica}$ Compressive strength in N/mm^2, with cubic samples measuring 15 cm per side.

$\lambda_{cil,cub15}$ Conversion coefficient obtained from Table 86.3.2.a

Table 86.3.2. Conversion coefficient

Strength of cubic specimen, f_c, (N/mm^2)	$\lambda_{cil,cub15}$
fc < 60	0.90
60 ≤ fc < 80	0.95
fc ≥ 80	1.00

The compressive strength shall be measured in accordance with UNE EN 12390-3. In the case of cylindrical specimen, it will only be necessary to reface samples with faces whose surface irregularities are greater than 0.1 mm or showing deviations in relation to the specimen centre line that are greater than 0.5°, when it will be generally sufficient to reface only the coating face.

Once these specimens have been manufactured, they should be maintained in the mould, appropriately protected, for at least 16 hours and no more than three days. During their stay on site, they shall not be struck or moved from their position and they shall be kept out of the wind and direct sunlight. During this period, the temperature of the air around the specimen shall be maintained within the limit laid down in Table 86.3.2.b. If other environmental conditions could affect the work, the Constructor shall prepare an enclosure that maintains the following conditions.

Table 86.3.2.b

Temperature range	fck (N/mm^2)	Maximum period during which the specimen stay in the work
15°C -30°C	<35	72 hours
	≥35	24 hours
15°C-35°C	Any	24 hours

When applying the concrete strength acceptance criteria laid down in section 86.5.3, the range relating to a group of three specimens obtained by taking the difference between the highest result and the lowest and divided by the average value of the three taken from the same mix, shall not exceed 20%. In the case of two specimens, the range may not exceed 13%.

86.3.3 Tests on the water penetration of the concrete

The checks to establish the depth to which pressurised water penetrates the concrete, if required, shall be carried out in accordance with UNE-EN 12390-8. Before beginning the test, the specimen shall be submitted to a preparatory drying period of 72 hours in a forced draft oven at a temperature of de 50±5°C.

86.4 Control prior to supply

The aim of checks prior to the supply of concrete is to check compliance of the composition and installations where they are to be used for manufacture.

86.4.1 Checking of documents prior to supply

In addition to the general documentation referred to in section 79.3.1, which is applicable to concrete, in the case of concretes without an officially recognised quality mark in accordance with Annex 19, the Supplier or if applicable the Manufacturer, shall submit a copy commissioned by a natural person to the Project Manager that sufficiently represents the dosing certificate referred to in Annex 22 and also the remaining preliminary test and characteristics if issued by one of the control laboratories laid down in 78.2.2, with a maximum age of six months.

If the concrete supplier changes during the work, it will be necessary to submit documentation for the new concrete to the Project Manager.

86.4.2 Checking of installations

The Project Manager shall assess the advisability of carrying out an control visit to the concrete plants with the aim of checking its eligibility for manufacturing the concretes required for the work directly or through a quality control body and preferably before the supply starts. In particular, compliance with the requirements laid down in Article 71 will be observed.

If applicable, a check will be carried out to ensure that production control has been introduced in accordance with the current applicable rules and that this is correctly documented by recording the checks and test results in the corresponding self-control documents

The control will also check that the concrete plant possesses a management system for component material stocks as established in 71.2.2 that makes it possible to establish traceability between concrete supplies and materials used for its manufacture.

86.4.3 Experimental checks prior to supply

Experimental checks prior to supply shall consist, if appropriate, in the conduct of preliminary tests and characteristic tests as specified in Annex 22.

The aim of the preliminary test shall be to check the eligibility of the component materials and dosing to be used by determining the compressive strength of concrete manufactured in the laboratory.

The aim of the characteristics test will be to check the eligibility of components materials, composition and instalations to be used in the manufacture of concrete, with regard to its mechanical capacity and durability. Compressive strength tests shall be carried out for this purpose and, if appropriate, tests on pressurised water penetration depth for concretes manufactured under the same conditions as the plant and using the same means of transport used to supply materials to the site.

86.4.3.1 Possible exemption from testing

Preliminary tests or strength characteristics tests shall not be necessary in the case of a ready-made concrete with documented earlier experiment of its use in other work, provided it is manufactured using component materials of the same nature and origin and the same manufacturing plant and processes are used.

The Project Manager may also exempt the products from the conduct of the characteristic dosing tests referred to in Annex 22 when any of the following circumstances apply:

a) the concrete to be supplied possesses an officially recognised quality mark,
b) a dosing certificate is available with the provisions of Annex 22 that is no more than six months old.

86.5 Control during supply:

86.5.1 Control of documents during supply:

Each batch of concrete used in the work shall be accompanied by a supply sheet with a minimum content laid down in Annex 21.

Project Manager shall accept the concrete batch documents after checking that the values shown in the supply sheet comply with the specifications in this Code and do not show any discrepancies with the composition certificate supplied previously.

86.5.2 Conformity control of the workability of the concrete during supply

86.5.2.1 Testing

The fresh concrete consistency tests shall be carried out in accordance with the provisions in section 86.3.1 when one of the following circumstances arises:

a) when specimens are manufactured for checking strength,
b) In al mixtures laid on site with indirect strength control as laid down in section 86.5.6, and
c) provided that it is indicated by the Project Manager or established in the Specific Project Technical Specifications

The consistency specification shall be that laid down, in accordance with 31.5, in the Specific Project Technical Specifications or, if applicable, as indicated by the Works Management.

The consistency comply the requirements if the settlement obtained in the tests are inside the limits defined in table 86.5.2.1

Table 86.5.2.1 Tolerances for concrete consistency

Consistency defined by type		
Type of consistency	Tolerance in cm	range
Dry	0	0 - 2
Plastic	±1	2 - 6
Soft	±1	5 - 10
Fluid	±2	8 – 17
Líquid	±2	14 - 22
Consistency defined by the slump		
Slump in cm	Tolerance in cm	range
Between 0 - 2	±1	A±1
Between 3 - 7	±2	A±2
Between 8 - 12	±3	A±3
Between 13 - 18	±3	A±3

In the case of self-compacting concrete, the concrete compliance with regards to workability shall be determined in accordance with the provisions in Annex 17

86.5.2.2 Acceptance or rejection criteria

When consistency has been defined for its type, in accordance with 31.5, the concrete shall be accepted when the arithmetic means of the two values obtained is within the corresponding range.

If the consistency has been defined for its slump, the concrete shall be accepted when the average of both values is within the tolerance defined in 31.5.

Failure to meet reception criteria will involve rejection of the mixture.

86.5.3 Methods of conformity control of the strength of the concrete during supply

The aim of the concrete strength control is to check that the strength of concrete actually supplied to the work complies with the characteristic strength defined in the design, in accordance with user safety and guarantee criteria defined for this Code.

The compressive strength test should be carried out in accordance with section 86.3.2. Their frequency and the applicable reception criteria shall be dependent on:

a) if applicable, possession of a quality mark and guarantee level applied during official recognition of the mark, and
b) the control procedure adopted in the design, which may be
c) :

Method 1. Statistical control, in accordance with 86.5.4,

Method 2. 100% control, in accordance with 86.5.5, and

Method 3. Indirect control, according to 86.5.6.

86.5.4 Statistical control of the strength of the concrete during supply

This control method is applied generally to all structural concrete works.

86.5.4.1 Strength control batches

In order to check its strength, the concrete used in the work shall be divided into two batches before the start of the supply, in accordance with the provisions of Table 86.5.4.1, except for well-founded exceptions under the responsibility of the Project Manager. The number of batches shall be at least three. If possible, each batch shall correspond to elements shown in each column of Table 86.5.4.1.

All mixtures from one batch shall come from the same supplier, shall be processed using the same component materials and shall have the same nominal composition. Concretes shown in different columns of Table 86.5.4.1 shall not be mixed in a batch.

Table 86.5.4.1

Maximum size of strength control batches for concretes without officially recognized quality marks

Upper limit	TYPE OF STRUCTURAL ELEMENTS		
	Elements or group of elements that operate fundamentally by compression (pillars, piles, load-bearing walls, columns, etc.)	Elements or group of elements that operate fundamentally by bending (beams, concrete floors, bridge decks, containing walls, etc.)	Solid (ground plates, bridge buttresses , blocks, etc.)
Volume of concrete	100 m^3	100 m^3	100 m^3
Concrete pouring time	2 weeks	2 weeks	1 week
Built areas	500 m^2	1.000 m^2	—
Number of floors	2	2	—

When a batch consists of concrete mixes holding an officially recognised mark, their size may be increased by multiplying the values in Table 86.5.4.1 by five or two depending on the level of guarantee for which the recognition was conducted complies with section 8 or section 7 of Annex 19, respectively. In these extended batch size cases, the minimum number of batches shall be three with each batch corresponding, if possible, to elements included in each column of Table 86.5.4.1. In no case may a batch be made up of mixtures supplied to the work during a time period greater than six weeks.

If the product is non-compliant when the corresponding reception criterion is applied, the Project Manager shall not apply the size increase referred in the previous paragraph for the following six batches. From the seventh successive batch, if the mark requirements have been met in the six previous batches, the Project Manager may opt to return to the originally defined control. In case of a new non-compliance, the conformity checking in the rest of the consignment as if the concrete had not a quality mark.

86.5.4.2 Testing

Before starting to supply the concrete in a batch, the Project Manager shall notify the Constructor, who shall notify the Supplier, of the applicable acceptance criterion.

Batch compliance as regards to strength shall be tested using the average values of results obtained from two specimen taken from each one of the *N* batches inspected in accordance with Table 86.5.4.2.

Table 86.5.4.2

Characteristic strength specified in the design f_{ck} (N/mm^2)	Concretes with officially recognised quality marks with guarantee level compliance with section 8 of Annex 19	Other cases
$f_{ck} \leq 30$	$N \geq 1$	$N \geq 3$
$35 \leq f_{ck} \leq 50$	$N \geq 1$	$N \geq 4$
$f_{ck} > 50$	$N \geq 2$	$N \geq 6$

Sampling shall be carried out on a random basis between mixtures of the work subject to control. When the batch includes concretes from more than one concrete plant, the Project Manager shall opt for one of the following alternatives:

a) subdivide the batch into sub-batches to which the required acceptance criteria shall be applied independently,
b) consider the batch as a whole, so that the controlled mixtures correspond to those of mixed origins and apply the control criteria corresponding to the least favorable case.

The average values, xi, of the strength measurements obtained from each one of the *N* mixtures checked shall be ordered:

$$x_1 \leq x_2 \leq \ldots\ldots \leq x_N$$

86.5.4.3 Acceptance or rejection criteria for the strength of the concrete

The concrete strength acceptance criteria for this control method shall be defined on the basis of the following cases:

Case 1: concretes holding an officially recognized quality mark with a level of guarantee compliant with section 5.1 of Annex 19 of this Code,

Case 2: concretes without a mark,

Case 3: concretes without a mark, manufactured continuously in the work plant, or supplied continuously by the same ready-mix plant, where more than 36 mixtures of the same concrete type are inspected.

For each case, the batch shall be accepted if it meets the criteria laid down in Table 86.5.4.3.a

Table 86.5.4.3.a

Statistical control case	Acceptance criterion	Remarks
Identification control		
1	$x_i \geq f_{ck}$	
Reception control		
2	$f\left(\bar{x}\right) = \bar{x} - K_2\, r_N \geq f_{ck}$	
3	$f\left(x_{(1)}\right) = x_{(1)} - K_3\, s^*_{35} \geq f_{ck}$	From the 37th mixture $2 \leq N \leq 6$ A mixture before the 37th, criterion no. 2 shall be applied

where:

$f(\bar{X})$; $f(X_i)$: Acceptance functions.

xi, Each one of the average values obtained in the strength determination for each one of the mixtures,

x Average value of the results obtained in the *N* mixtures tested,

σ Standard *d*eviation values corresponding to production of the concrete type supplied, in N/mm^2, and certified for the quality mark, where applicable

δ Value of coefficient of variation in the production of the type of concrete supplied and certified, where applicable, for quality mark,

f_{ck} Value of characteristic strength specified in the design,

K_2 y K_3 Coefficients that tae the values shown in Table 86.5.4.3.b

$x_{(1)}$ Minimum value of results obtained in the last (1) *N* mixtures,

$x_{(N)}$ Value of sample run defined as

$$r_N = x_{(N)} - x_{(1)}$$

s Value of typical sample deviation, defined as

$$s_N = \sqrt{\frac{1}{N-1}\sum_{i=1}^{N}(x_i - \bar{x})^2}$$

s^*_{35} Value of typical sample deviation, corresponding to the last 35 mixtures.

Table 86.5.4.3.b

Coefficient	Number of mixtures checked (N)			
	3	4	5	6
K_2	1.00	0.82	0.72	0.66
K_3	0.85	0.67	0.55	0.43

As a temporary arrangement, up to 31 December 2010, the case of concretes with an officially recognised quality mark with a level of guarantee compliant with section 6 of Annex 19 of this Code may be considered. In this case, the acceptance criterion to be used shall be

$$f\left(\bar{x}\right) = \bar{x} - 1{,}645\sigma \geq f_{ck}$$

where:

x Average value of results obtained in these *N* mixtures tested,

o Value of typical deviation corresponding to production of the type of concretes supplied in N/mm^2 and certified by the quality mark

86.5.5 Control of the strength of the concrete at 100%

86.5.5.1 Testing

This control method may be applied to any structure, provided this is adopted before the beginning of the concrete supply.

The concrete strength compliance shall be tested by measuring this strength in all mixtures inspected and calculating the value of the true characteristic strength from the results, $f_{c,real}$, as described in 39.1.

86.5.5.2 Acceptance or rejection criteria

For elements manufactured with *N* mixtures, the value of $f_{c,real}$ corresponds to the strength of the mixture which, once the *N* measurements have been sorted from lowest to highest, occupy position $n = 0.05\ N$, rounding up *n*.

When the number of mixtures to be inspected is less than or equal to 20, $f_{c,real}$ shall be the lowest mixture strength value in the series.

The acceptance criterion for this acceptance method shall be defined by the following equation:

$$f_{c,real} \geq f_{ck}$$

86.5.6 Indirect control of the strength of the concrete

In the case of structural concrete elements, this control method may only be applied for concretes with an officially recognised quality mark that is used in one of the following cases:

- one or two-storey dwelling building elements, with spans less than 6.00 metres, or
- up to four-storey dwelling building elements, which work by flexure, with spans less than 6.00 metres.

The following two conditions shall also be met:

a) area in which the element is located shall be I or II as indicated in section 8.2,
b) the theoretical compressive strength adopted in the design should be with fcd no greater than 10 N/mm^2.

This control procedure shall also be applied in the case of non-structural concretes in the sense shown in Annex 18.

86.5.6.1 Testing

At least four measurements of consistency shall be carried out spaced out through each day of supply, and also when indicated by the Project Manager or laid down in the Specific Project Technical Specifications.

In order to conduct these tests, it will be sufficient for them to be carried out under the supervision of the Project Manager and filed on site in corresponding logs that also include values obtained and decisions taken in each case.

86.5.6.2 Acceptance or rejection criteria

The supply of concrete shall be accepted if it simultaneously meet the three following conditions:

a) the consistency test results comply with the provisions of 86.5.2.
b) the quality mark for the concrete used throughout the period of supply of the work remains in force.
c) the quality mark official recognition remains in force, where applicable.

86.6 Certification of the concrete supplied

When supply of concrete to the work is completed, the Constructor shall provide the Project Manager with a certificate of concrete supplied indicating the concrete types and quantities,

processed by the Manufacturer and signed by a natural person with sufficient powers of representation, with content compliance with the provisions of Annex 21 of this Code.

86.7 Decisions arising from the control

The decision to accept the concrete shall be dependent on the check on its compliance, applying the criteria laid down for this purpose in this Code or, if applicable, by means of conclusions drawn from special studies that are carried out in accordance with the provisions of this section if the said criteria are not complied with.

86.7.1 Decisions arising from the control prior to supply

Before it is agreed that supply of a concrete to the work should begin, a check should previously be carried out to ensure that the following conditions are met:

a) the contents of the concrete documentation referred to in section 86.4.1. allows it to be assumed that the concrete supply meets the requirements laid down in the design and also those laid down in this Code.
b) if applicable, previous tests and characteristics tests on strength and composition comply with the requirements laid down in 86.4.3.

86.7.2 Decisions arising from the control before placing

The Project Manager or its representative shall accept the placing of a concrete mixture after checking that:

a) the contents of the accompanying supply sheet comply with the provisions laid down in this Code and
b) If appropriate, after checking that it consistently complies with the criteria laid down in section 86.5.3.

86.7.3 Decisions arising from the experimental control following placing

86.7.3.1 Decisions arising from the control of strength

The Project Manager shall accept the batch with regard to strength when the acceptance criteria selected from among those defined in sections 86.5.4, 86.5.5 and 86.5 or 86.5.6 is complied with, according to the control method applied.

In the case of concretes with a quality mark whose guarantee level complies with section 5.1 of Annex 19 of this Code, not complying the acceptation criteria defined in the table 86.5.4.3.a for the identification check, the Project Manager shall accept the batch when the individual values obtained in these tests being greater than $0{,}90.f_{ck}$ and provided that after reviewing the production control results corresponding to the period closes to the concrete pouring date and provided the following equation is met:

$$\bar{x} - 1{,}645.\sigma \geq 0{,}90.\ f_{ck}$$

where:

$\bar{x}$ Average value of a set of values obtained when the non-compliant result is incorporated within the 14 production control result that are temporarily closest to the result, and

σ Value corresponding to standard deviation in the production of the supplied concrete type, in N/mm^2, and certified by a quality mark, if appropriate

In other cases, the Project Manager, without prejudice to the contractually applied sanctions and in accordance with the provisions laid down in the corresponding Specific Project Technical

Specifications shall evaluate the acceptance, reinforcement or demolition of elements built using the concrete in the batch from information obtained through the gradual application of the following procedures:

a) firstly, on its own initiative or at the request of any of the parties, the Project Manager shall order the conduct of complementary informative tests as laid down in section 86.8 with the aim of checking whether the characteristic strength of the actual concrete in the structure corresponds to that specified in the design. The said tests may be carried out by a laboratory agreed between the parties and compliant with section 78.2.2,

b) if the informative test confirms the results obtained in the control, the Project Manager, acting on its own initiative or on the request of one of the parties, shall commission a specific safety study on the elements affected by the concrete in the batch subject to acceptance control, which shall check that the level of safety achieved with the strength values of the concrete actually laid in the work is acceptable. To do this, the characteristic strength of the concrete shall be estimated on the basis of the control results or, if applicable, using complementary informative tests,

c) if applicable, the Project Manager may order testing of the structural behaviour of the actually constructed elements by carrying out load tests in accordance with Article 79.

The Project Manager may also consider, if appropriate, the results obtained from tests carried out on specimens over and above those ordered, provided that they have been manufactured in the same sampling run as the control specimens and obtained from the same mixtures as those that are being analysed.

If an indirect control of concrete strength is carried out and the results obtained are not compliant with the requirements set out in 86.5.6, the Project Manager shall evaluate the acceptance of elements built using the concrete in the batch from information on the concrete production control provided by the supplier without prejudice to financial penalties and penalties of any other type that may be contractually applicable according to the requirements set out in the special technical specifications.

86.7.3.2 Decisions arising from the control of durability

If it is found that a concrete placed in the work fails to meet any of the durability requirements specified in this Code, the Project Manager shall evaluate the conduct of specific experimental checks and, if applicable, the adoption of superficial protection measures to make up for any possible potentially unfavourable effect of the breach.

In particular, the Project Manager shall carefully evaluate any deviations that arise between the results of tests carried out during the reception control and the values shown in the dosing certificate to see if any possible alterations in the composition may be deduced.

86.8 Tests on additional information for the concrete

These tests are only required in cases foreseen by this Code in section 86.7, when covered by the Specific Project Technical Specification or when required by the Project Manager. Their aim is to estimate the strength of concrete from a determining part of the work, at a certain age, or after curing under conditions similar to those in the work.

Similarly, the Project Manager shall decide to use them in any of the following circumstances:

- when a breach has arisen upon application of acceptance criteria in the case of statistical concrete controls, or
- upon the request of any of the parties, when justifiable doubts exist on the representativeness of results obtained during experimental controls on fresh concrete specimens.

The concrete informative tests may consist of:

a) elaboration and breakage of specimens, in a manner similar to that described for control tests, but keeping the specimens under non-standard conditions, that are as close as possible to the conditions under which the concrete whose strength is to be estimated are kept.
b) The breakage of standard specimens obtained from the concrete in accordance with UNE-EN 12390-3. This test shall not be carried out when the extraction may significantly affect the strength capacity of the element under examination, to the point of constituting an unacceptable risk. In such cases, the possibility of surveying the element prior to extraction.
c) Use of reliable non destructive methods as a complement to the methods described above and duly related with those methods.

The Project Manager shall judge the results in each case, taking into account that, in order to obtain reliable results these always delicate tests must be carried out by specialised staff.

86.9 Control of the concrete for the production of precast elements

In the case of precast elements with EC marking, the concrete control shall be carried out in accordance with the corresponding criteria laid down in the corresponding harmonised European standard.

In the case of products for which EC marking is not in force or for products where the precast producer requires a weighting factor of 1.50 for the concrete in accordance with 9.1.1, the instructions given in this section shall be followed.

This control procedure is generally applied to self-consumed concrete manufactured in fixed plants located in installations designed for the industrial manufacture of structured precast elements.

The specific criteria established for materials in Article 85 and the tests indicated in section 86.3 are applicable.

The control described in the following section shall be carried out by the component manufacturer in its own plant. The Project Manager may order checking of compliance of this control in accordance with the provisions in Article 91.

86.9.1 Control of conformity in the workability of the concrete

86.9.1.1 Testing

The fresh concrete consistency tests shall be carried out in accordance with the provisions in section 86.3.1 when specimens are manufactured for checking strength.

In the case of self-compacting concrete, the concrete compliance with regards to workability shall be determined in accordance with the provisions in Annex 17.

86.9.1.2 Acceptance criteria

When the value obtained is within the tolerances set out in 31.5, it shall be accepted. Deviation from these criteria shall require evaluation and justification.

86.9.2 Statistical control of strength

For the strength control in accordance with Article 91.5.2, a batch shall be considered a set of the same type of concrete used to manufacture all precast elements of the same type provided these have not been manufactured over a time period greater than one month.

All the mixtures in the same batch shall be produced using the same component materials and their dosage shall be the same. It is not permitted to mix elements from different columns of Table 86.9.2 in the same batch.

This statistical control of strength shall be carried out using the results of cumulative test on the same type of concrete on the same floor over one month, irrespective of whether the elements precast using mixtures from this batch belong to more than one work.

Table 86.9.2
Maximum limits of strength control batches for concretes used in the manufacture of precast elements

Maximum limits	Prestressed	Reinforced
Period of manufacture	Monthly	Monthly
Test frequency (up to 300m^3 per type)*	Daily	Daily
Minimum number of tests	16	16

* With productions greater than 300 m^3 by type and day, it should be increased by one daily sampling.

86.9.2.1 Testing

The design or, if applicable, the precast producer shall identify the characteristic strength to be complied with by each type of concrete used to produce the manufactured structured precast elements.

Compliance of the strength of the concrete in each batch shall be tested by measuring strength in all mixtures subject to control on the basis of their results, by applying the compliance criteria laid down in 86.9.2.

Sampling shall be carried out on a random basis among mixtures of the same type of concrete within the period considered.

An external comparative control shall be carried out on the strength of concrete with frequency never less than 2 measurements per month on total output, to achieve fair sampling of concretes.

86.9.2.2 Acceptance or rejection criteria for the strength of the concrete

The acceptance criterion for the strength of concrete manufactured in the plant and destined for structural precast elements shall be defined using the following equation:

$$f\left(\bar{x}\right) = \bar{x} - 1{,}645\sigma \geq f_{tk}$$

$\bar{x}$ Average value of the results obtained in the N mixtures tested,

σ Value of typical deviation corresponding to production of the types of concretes supplied in N/mm^2, obtained from the last 35 results.

f_{ck} Value of characteristic strength specified by the manufacturer for the type of concrete used.

In exceptional cases, when continuous production of a type of concrete is not carried out, meanings that monthly sampling is less than the 16 specified for the batch in table 86.9.2, batches shall be estimated on a weekly basis using the following equation:

$$f(\bar{x}) = \bar{x} - K_2 r_n \geq f_{ck}$$

where:

$\bar{x}$ Average value of the results obtained in the N mixtures tested,

K_2 Value of the coefficient shown in Table 89.9.2.3 according to the number of mixtures *N*

r_n Value of sample run defined as

$$r_n = x_N - x_1$$

f_{tk} Value of characteristic strength specified by the manufacturer for the type of concrete used.

Table 89.9.2.3

Coefficient	Number of mixtures tested				
	2	3	4	5	6
K_2	1,66	1,02	0,82	0,73	0,66

86.9.2.3 Decisions arising from the control of strength of concrete

If the concrete is found to be non-compliant, the Prefabricator shall notify the corresponding Project Manager, which will assess the need to apply the criteria established for concrete manufactured in the plant, in accordance with 86.7.3.

Article 87. Control of steel

When steel is equipped with EC marking, its compliance shall be checked by means of documentary verification that the values stated in the document accompanying the EC marking allow compliance with the specifications laid down in the design and in Article 32 of this Code.

While EC marking is not enforced for indented steel designed for the processing of reinforcement for reinforced concrete, it shall be compliant with this Code and also with EC 10.080. The demonstration of the this compliance in accordance with the provisions of 88.5.2 may be carried out by means of:

a) Having an officially recognized quality mark, in accordance with the provisions in 19 of Annex of this Code,
b) Carrying out check tests during reception. In this case, depending on the quantity of steel supplied, a distinction shall be drawn between:

- supplies less than 300 t:

  The supplies shall be divided into batches, each corresponding to the same supplier, manufacturer, designation and series, the maximum quantity being 40 tons.
  Specimens shall be taken for each batch on which the following tests shall be carried out:

- Check that the equivalence section complies with the specifications in 32.1
- Check that the geometrical characteristics are within the permissible limits laid down in the specific adherence certificate in accordance with 32.2 or alternatively they comply with the corresponding corrugation index.
- Conduct a fold-unfold test or alternatively a simple fold test as described in 32.2, checking the absence of cracking after the test.

At least one specimen of each diameter, type of steel used and manufactured shall also checked to ensure that the elastic limit, the break load, the relationship between both, enlargement of the break and enlargement under maximum load complies with the specifications in Article 32 of this Code.

- supplies greater or equal to 300 t:

In this case, the general provisions given for smaller supplies shall be applied but the check on mechanical properties referred to in the last paragraph shall be extended to four specimens.

Alternatively, the Supplier may opt for the provision of a certificate of traceability, signed by a natural person that declares the manufacturers and pourings corresponding to each part of the supply.

The Supplier shall also provide a copy of the manufacturer's control certificate that includes the results of mechanical and chemical tests obtained for each pouring. In this case, verification or contrast tests shall be carried out on the traceability of the pouring by determining chemical properties on one out of every four batches, with a minimum of five tests that shall be understood to be acceptable when their chemical composition displays variations around the production control certificate values compliant with the following criteria:

%C test	=	% C certificate	± 0.03
%C_{eq} test	=	% C_{eq} certificate	± 0.03
%P test	=	% P certificate	± 0.008
%S test	=	% S certificate	± 0.008
%N test	=	% N certificate	± 0.002

Once the traceability of the pourings and their compliance with the chemical properties have been checked, they shall be divided into batches, corresponding to each pouring, series and manufacturer. The minimum number may not be lower than 15 in any case. Two specimens shall be taken for each batch on the following tests are carried out:

- Check that the equivalence section complies with the specifications in 32.1
- Check that the geometrical characteristics of ridges are within the permissible limits laid down in the specific adherence certificate in accordance with 32.2 or alternatively they comply with the corresponding corrugation index.
- Conduct a fold-unfold test or alternatively a simple fold test as described in 32.2, checking the absence of cracking after the test.
- Check that the elastic limit, the break load, the relationship between both and the enlargement during breakage comply with the specifications in this Code.

The batch shall be accepted if no non-compliance with the specifications indicated in Article 32 or detected in said tests or checks under this point. Otherwise, if non-compliance is detected only on a single sample, an additional series of five specimens corresponding to the same batch and used to carry out a new set of tests or checks on the properties for which the non-compliance is detected. If a new case of non-compliance appears, the batch shall be rejected.

c) in the case of structures subject to fatigue, the behaviour of steel products for steel concrete with regard to fatigue may be demonstrated by submitting a test report that guarantees the requirements in section 38.10 that is no more than one year old and conducted by one of the laboratory described in section 78.2.2.1 of this Code.
d) in the case of structures located in a seismic area, the behaviour with regard to cyclic loads with alternative strain may be demonstrated by submitting a test report that guarantees the requirements laid down in Article 32 that is no more than one year old and carried out by one of the laboratories set out in section 78.2.2.1 of this Code unless otherwise indicated by the Project Manager.

Article 88. Control of passive reinforcements

The aim of this Article is to define procedures for checking compliance before installation in the work of electrically welded mesh, basic reinforcements electrically welded into a lattice work, processed reinforcements or, if appropriate, reinforced steelwork.

The notes in this Article are applicable if the product is being supplied for the industrial plant outside the work, and also if it has been prepared in the work's own plant.

88.1 General criteria for the control of passive reinforcements

Conformity of a reinforcements with provisions laid down in the design shall be checked during reception at the work and include their behaviour with regard to mechanical properties, adherence, geometry and any other characteristic laid down in the Specific Project Technical Specifications or decided by the Project Manager.

In accordance with the provisions in 79.3, in the case of standard reinforcement, welded mesh and basic reinforcement welded into a lattice in possession of EC marking as laid down in directive 89/106/ECC, their compliance may be sufficiently checked by ensuring that the categories or values stated in the documents accompanying the referred EC marking allow compliance with design specifications or otherwise with this Code to be established.

If standard reinforcements are not equipped with EC marking, their compliance shall be checked by applying the same criteria as laid down for steel in Article 87. Two tests shall also be carried out per batch to check compliance with regards to unfolding load referred to in sections 33.1.1 and 33.1.2, as well as checking the geometry in four elements per batch as defined in Article 87, using the criteria in 7.3.5 in UNE-EN 10080. When the standard reinforcements have a quality mark as 81.1, the Project Manager could exempt these experimental checks. The documentation will be checked accordingly to 88.4.1, 88.5.2 and 88.6. Moreover, the Project Manager shall reject the use of standard reinforcement with a level of oxidation that could affect bonding conditions. In these cases it will be considered an excessive level of oxidation when, after brushing with wire brush, the weight lost of the sample bar is higher to 1%. Likewise, once eliminated the oxide, shall be checked that the height of rib satisfies the established limits for bonding in Article 32 of this Code.

In the case of reinforced steelworks, in accordance with section 33.2, the Project Manager or, if applicable, the Constructor, shall notify the Supplier in writing of the work programme, noting orders and limit dates for reception at the work after which the reinforcement manufacturer shall notify the Project Manager in writing of its manufacturing programme with the aim of making it

possible to carry out sampling and check activities that should preferably be carried out in its own insulation

The reception control shall also be applied to processed reinforcements and also, if applicable, to reinforce steelworks received at the work from an industrial installation outside the work and also to any reinforcement prepared directly by the Constructor within its own work.

88.2 Sampling of reinforcement

The Project Manager, acting on its own behalf or through a quality control body, shall take the samples in its own installation where the reinforcement is being produced on batches destined for the work. The sampling may be attended by representatives of the Constructor and the reinforcement manufacturer. Except in exceptional cases, the Project Manager shall take the samples at its own work.

The quality control body shall supervise the representativeness of the sample and not excepting any cases samples should be taken from reinforcements that cutting of the design or from reinforcements specifically destined for the conduct of tests unless they are manufactured in its presence or under its direct control. Once the samples have been removed, the reinforcements altered during the sampling shall be replaced, if applicable.

The quality control body shall issue one certificate for each sample that shall be signed by all parties present, a copy of the certificate being given to each. The certificate shall be drawn up in accordance with a model approved by the Project Manager at the beginning of the work, whose minimum contents are set out in Annex 21.

Control, preventive and countersamples (verification samples) shall be taken. The countersamples shall be taken in cases where the representative of the reinforcement Supplier or the Constructor, if applicable, requires it.

The sample size shall be sufficient to carry out all the checks and tests covered by this Code. All samples shall be sent for testing at the control laboratory after being correctly taken and identified.

88.3 Testing

Any tests on the reinforcements other than those specified in this section shall be carried out in accordance with provisions laid down for this purpose in the technical specifications or in accordance with instructions of the Project Manager.

88.3.1 Tests for checking the conformity of the mechanical characteristics of the reinforcements

In general, the mechanical characteristics of the reinforced shall be determined in accordance with the provisions of UNE EN ISO 15630-1. If it is necessary to determine the mechanical characteristics on standard reinforcements, this should be carried out in accordance with UNE EN ISO 15630-30 and UNE EN ISO 15630-3 for welded mesh or basic reinforcement welded in a lattice, respectively.

Fold-unfold and simple fold test should be carried out in accordance with the corresponding UNE-EN ISO 15630 on mandrels indicated in UNE EN 10080.

88.3.2 Tests for checking the conformity of the bonding characteristics of the reinforcements

The reinforcement geometry characteristics shall be tested by applying the methods given for this purpose in UNE EN ISO 15630-1.

88.3.3 Tests for checking the conformity of the geometry of the reinforcements

The conformity of the geometric characteristics of the reinforcements shall be checked by:

- determining longitudinal dimensions with a measurement resolution of at least 1.0 mm.
- determination of the true fold diameters by applying the corresponding fold plans.
- determination of geometrical alignments, with a resolution of at least 1°

88.4 Control prior to supply

Checks prior to supply of processed reinforcements or, if applicable, of the reinforced steelwork, are carried out with the aim of checking conformity of processes and the installations it is aimed to use.

88.4.1 Checking of documents prior to supply

In case of finished or assembled reinforcements, in addition to the general documents referred to in section 79.3.1, that are applicable to reinforcements it is aimed to supply to the work, the Supplier or, if applicable, the Constructor shall submit a copy certified by a natural person to the Project Manager the following documentation:

a) if applicable, a copy certified of a document showing that the reinforcement holds an officially recognized quality mark,
b) if the product is steelwork reinforced by means of non-resistant welding, qualification certificates of the personnel carrying out the weld, specifying their special training for this procedure.
c) if it is planned to carry out resistance welding processes, type approval certificates for the welds, in accordance with UNE-EN 287-1 and the welding process in accordance with UNE-EN ISO 15614-1.
d) if the design requires anchorage and lap lengths that, under the terms of 69.5, demand the use of steel with an adherence certificate, these shall be incorporated in the corresponding documentation before supply. If EC marking for ribbed steel is not in force, this certificate shall be no older than 36 months from the steel manufacture date.

In case of standard reinforcement, the Suplier or, if applicable, the Constructor, Constructor shall submit to the Project Manager a copy certified by a natural person of documents a) and d).

If the reinforcement or steelwork processing procedure is covered by an officially recognised quality mark, the Project Manager may be exempt from the documents referred to in parts b, c and d.

Before starting to supply the reinforcements in accordance with the design, the Project Manager may review the cutting plans prepared specifically for the work. This review is obligatory in the cases indicated in 69.3.1.

When the reinforcement supply is changed, it will be necessary to re-submit the corresponding documents.

88.4.2 Checking of steelwork installations

The Project Manager shall assess the advisability of carrying out a control visit to the steelwork installation where the reinforcements are processed, directly or through a quality control body, with the aim of checking its eligibility for manufacturing the reinforcements required in the work. In particular, compliance with the requirements laid down in section 69.2 will be observed.

These controls shall be necessary in the case of installations belonging to the work site, when a check will be carried out to ensure that a minimum space has been set aside for the steelwork process with a pre-established space for storing raw materials, a fixed space for machinery and

processing and installation processes and also special enclosures for storing finished reinforcements and, if appropriate, assembled reinforcements.

The Project Manager may demand from the standard reinforcements Supplier, if applicable, the steelwork Processor or the Constructor, information demonstrating the presence of a production control in accordance with the requirements of 69.2.4 and correctly documented by the recording of checks and test results in corresponding self-control documents that include at least the characteristics specified in this Code.

88.5 Control during supply

88.5.1 Checking the supply of steel for passive reinforcement

In the case of reinforcements processed in the own work site, the Project Manager shall check the compliance of the steel products used in accordance with the provisions of Article 87.

88.5.2 Control of documents of reinforcement during supply or fabrication on site:

The Project Manager shall check that each consignment of reinforcements supplied to the work is accompanied by the corresponding supply sheet, in accordance with the provisions set out in 79.3.1.

It shall also check that the supply of reinforcements corresponds with the steel identification declared by the Manufacturer and supplied by the reinforcement Supplier in accordance with the provision sin 69.1.1. If some traceability problem is detected, the reinforcements affected by the problem shall be rejected.

For reinforcements processed in the work installations, a check should be carried out that the Constructor maintains a manufacturing log showing the same information as in the supply sheets to which this section refers for each batch of elements manufactured.

The Project Manager shall accept the reinforcement consignment documentation after checking that it conforms to specifications in the design.

88.5.3 Experimental checks of the processed reinforcement or the steelwork reinforcement during the supply or fabrication in the construction site

Experimental checks on reinforcement processed shall include the checking of mechanical properties, adherence properties and geometrical dimensions, as well as other additional properties when process of resistant welding is used.

If the reinforcement processed or the reinforced steelwork is covered by an officially recognised quality mark with a level of guarantee in accordance with Annex 19, the Project Manager may exempt the products from all the experimental checks referred to in this section.

For the purposes of experimental control of reinforcements, the set of reinforcements complying with the following conditions is defined as a batch:

- the batch size shall not exceed 30 tons.
- in the case of reinforcements processed in a fixed industrial installation outside the work, they shall be supplied in consecutive consignments from the steelwork installation,
- in the case of reinforcements processed in work installations, they shall not be processed for a period longer than one month,
- all the steel used to process reinforcements is of the same type and the same supplied shape (straight bar or roll).

In general, as provided in article 78.2.2, the tests shall be done in control laboratories satisfying the prescriptions in the articles. Nevertheless, in case of processed reinforcement or

steelwork reinforcement produced in accordance with a officially recognized quality distintive, it is allowed that the rib geometry checking could be done directly by the quality control entity, in order to accelerate the period for the supply and installation of elements whose production control is supervised by the certification entity and officially recognized by the Administration.

88.5.3.1 Checking the conformity of the mechanical characteristics of processed and steelwork reinforcements

The mechanical characteristics of processed reinforcements shall be checked for compliance by the Project Manager.

In the case of reinforcements manufactured without welding processes, mechanical characterisation shall be carried out by tensile tests on two samples corresponding to one diameter from each series (fine, medium and large) of those defined in UNE EN 10080. if the ribbed steel used to process the reinforcements is covered by an officially recognised quality mark in accordance with the provisions in Annex 19, the Project Manager may carry out the test on a single sample of every sample. If straightening processes have not been used, the products may be exempt from carrying out these tests.

In the case of reinforcements manufactured using resistant or non-resistant welding processes, at least four samples shall be taken per batch, corresponding to the most representatives diameter combinations of the weld process in the opinion of the Project Management or, if appropriate, the control body, by carrying out the following checks:

a) tensile test on two specimens corresponding to the lowest diameter in each sample, and
b) simple folding tests or, if appropriate, fold-unfold tests on specimens corresponding to the highest diameter steels in each sample.

If the ribbed steel used to process the reinforcement is covered by an officially recognised quality mark, the Project Manager may carry out the above tests on a unique sample per batch

The batch shall be accepted provided that: the following is complied with:

c) in the case of straightening, the final mechanical properties of the steel should provide results consistent with the margins defined for each process in this Code and applied to the specification corresponding to steel in section 32.2.
d) in the case of other processes~~,~~ the mechanical characteristics after the tensile and fold tests described in this section continue to comply with the specifications laid down for steel in Article 32

Otherwise, a new set of samples will be taken from the same batch. If any specification is not complied with again, the batch shall be rejected.

88.5.3.2 Checking the conformity of the bonding characteristics of the processed reinforcements and the steelwork reinforcement

Checking the conformity of reinforcement bonding characteristics is required whenever the processing includes any straightening process.

To characterise the adherence, two samples are taken corresponding to each one of the diameters forming part of the batch that have undergone straightening. Their geometrical characteristics shall be determined. If the steel is covered by an adherence characteristic certificate in accordance with Annex C in UNE EN 10080, it will be sufficient to determine its corrugation height.

The batch shall be accepted if it meets the specifications laid down in Article 32 in the case of steel supplied in a bar. Otherwise, a new set of samples will be taken from the same batch. If any specification is not complied with, the batch shall be rejected.

Project Manager shall also reject the use of reinforcements with a level of oxidation that may affect their adherence condition. The level of oxidation shall be understood to be excessive when it is found that the weight lost from a specimen of bar, welded mesh or basic reinforcement welded into a lattice exceeds 1% when brushed with a wire brush.

A check shall also be carried out to ensure that once the rust has been eliminated, the rib height complies with the limit laid down for adherence to the concrete in accordance with Article 32 of this Code.

88.5.3.3 Checking the conformity of the geometric characteristics of the processed reinforcements and the steelwork reinforcement

The geometrical characteristics of the reinforcements in a batch constituted by consecutive consignments up to 30 tons, will be done on a sample made up of a minimum of fifteen reinforcement elements, preferably of different shapes and types, as per criteria of the Project Manager.

Checks to be carried out on each element shall be at least the following:

a) Correspondence of reinforcement diameters and steel types with that laid down in the design, and

b) alignment of straight elements, geometrical sizes and fold diameters, checking for deviations observable to the naked eye in straight sections and that the fold diameters and geometric deviations with regard to the design cut shapes comply with the tolerances laid down in the relevant design or, if applicable, in Annex 11 of this Code.

In the case of reinforced steelworks, the following checks shall also be carried out::

a) correspondence of the number of reinforced elements (bars, bases, etc.) indicated in the design, and

b) compliance of distances between bars

If conditions are not complied with, the reinforcement responsible for the non-compliance shall be discarded and a checking of the complete consignment will be carried out.. If the tests are positive, the consignment shall be accepted after replacement of the defective reinforcement. Otherwise the complete consignment will be rejected.

88.5.3.4 Additional checks in the case of manufacturing processes using resistant welding

If resistant welding is used to process a reinforcement in an industrial installation outside the work, the Project Manager shall provide documentary evidence that the processes are covered by an officially recognised mark. In the case of reinforcements processed directly in the work, the Project Manager shall allow the production of a resistant weld only in the case of intensive control.

The Project Manager shall also order the conduct of a set of experimental checks on process compliance depending on the type of welding, in accordance with the provisions in section 7.2 of UNE 36832.

88.6 Supply certificate

The Constructor shall file a certificate signed by a natural person and prepared by the passive reinforcement Supplier, that it shall forward to the Project Manager by the end of the work, this shall express compliance of all actually supplied passive reinforcements with this Code, and state the true quantities of each type and also their traceability to the manufacturers in accordance with information available in the documentation laid down by UNE EN 10080.

If the same supplier carries out several consignments over several months, monthly certificates shall be submitted during the same month. A single certificate may be accepted including all the batches supplied during the reference month.

When the EC marking for the steel products comes into force, the reinforcements Supplier shall provide the Constructor with a copy of the compliance certificate included in the documentation accompanying the said EC marking.

In the case of installations in the works, the Constructor shall process and deliver to the Project Manager a certificate equivalent to that indicated for the installations outside the works.

Article 89. Control of steel for active reinforcements

When steel for active reinforcement is equipped with EC marking, its compliance shall be checked by means of documentary verification that the values stated in the document accompanying the EC marking allow compliance with the specifications laid down in the design and in Article 34 of this Code to be deduced.

If the steel for active reinforcements is not equipped with EC marking, its compliance shall be checked following the next criteria:

a) if the steel is covered by an officially recognized quality mark, it shall be sufficient to check that the official mark recognition remains in force,
b) In other cases, depending on the quantity of steel supplied, a distinction shall be drawn between:

- supplies less than 100 t:

The supplies shall be divided into batches, each corresponding to the same supplier, designation and series, the maximum quantity being 40 tons. Two specimens shall be taken for each batch that shall be used to check that the equivalent cross section complies with the specifications in Article 34.

The elastic limit, break load and extension under maximum load shall also be measured on at least two occasions during performance of the work.

- supplies greater than 100 t:

The Supplier shall supply a certificate of traceability, signed by a natural person that declares the manufacturers and pourings corresponding to each part of the supply. The supply shall be divided into batches corresponding to each pouring and manufacturer. Two specimens shall be taken for each batch that shall be used to check that the equivalent cross section complies with the specifications in Article 34:
The elastic limit, break load and extension under maximum load shall also be measured on at least two occasions during performance of the work.
The Supplier shall provide a copy of the manufacturer's production control certificate that includes the results of mechanical and chemical tests obtained for

each pouring. Counterchecks shall be carried out on traceability of the pouring by determining chemical characteristics on one of every four batches, with a minimum of five tests. The Supplier shall also submit a certificate under results of tests carried out by an official laboratory or in accordance with section 78.2.2 that makes it possible to check the steel's compliance with corrosion and stress in accordance with the provisions of Article 34 of this Code.

If the steel for active reinforcement is covered by an officially recognised quality mark, a check shall be carried out to ensure:

a) the quality mark on the product issued by the certifying body remains in force, and
b) the official mark recognition remains in force.

Article 90. Control of prestressing systems and elements

90.1 General criteria for the control

Compliance of prestressed elements with provisions laid down in the design shall be checked during reception at the work and include all components required to apply the prestressing force to the structure. The prestressing components reception control shall include, where applicable:

- the prestressing steel,
- the prestressing units of whatever type (wires, cables, bars, etc.)
- anchorage devices, where applicable
- connection devices, where applicable
- sheaths, where appropriate
- grouting materials, where appropriate, and
- systems for applying prestressing force.

In accordance with the provisions in 79.3, in the case of prestressing components or systems covered by EC marking as laid down in Directive 89/106/EEC, compliance may be sufficiently proven by checking that the categories or values declared in the documentation accompanying the EC marking allows compliance of design specifications to be deduced.

90.2 Sampling

Where applicable, the prestressing steel samples shall be taken in the own work site in accordance with UNE EN ISO 377. Representatives of the Project Manager, the Constructor , the prestressing Applicator and the prestressing steel Manufacturer may be present.

The Project Manager shall supervise the representativeness of the sample and shall not accept sampling from elements that have been supplied specifically for the conduct of tests under any circumstances.

The control laboratory representative or, if applicable, the quality control body representative shall issue one certificate for each sample, that shall be signed by all parties present, a copy of the certificate being given to each. The certificate shall be drawn up in accordance with a model approved by the Project Manager at the beginning of the work, whose minimum contents are set out in Annex 21.

The sample size shall be sufficient to carry out all the checks and tests covered by this Code. All samples shall be sent for testing at the control laboratory after being correctly taken and identified.

90.3 Testing

If the Project Manager decides to carry out tests for mechanical characterisation of any prestressing unit, wire, bar or cable, it should be carried out in accordance with the provisions in UNE EN ISO 15630-3.

90.4 Control prior to the application of the prestressing

The aim of checks prior to the application of the prestressing is to check the documentary compliance of materials, systems and processes used for the application of prestressing force.

90.4.1 Control of documents

In additional to the general documents referred to in section 79.3.1, that are applicable to materials or systems for the application of the prestressing it is aimed to supply to the works, a copy certified by a natural person of the following documentation shall be submitted to the Project Manager:

a) a certificate attesting that the prestressing components to be supplied are legally marketed or, if appropriate, the EC marking compliance certificate,
b) if applicable, a certificate proving that the prestressing application system is covered by an officially recognised quality mark,

When a change in supplier occurs during the work, it will be necessary to re-submit the corresponding documents.

90.4.2 Checking of the prestressing systems

The Project Manager shall assess the advisability of carrying out an control of the prestressing application system either directly or through a quality control body before the start of a supply with the aim of checking that the conditions of eligibility for application in the works are maintained. In particular, compliance with the requirements laid down in Article 70 will be observed.

90.5 Control during the application of the prestressing

90.5.1 Control of documents during supply:

Each batch of prestressing unit (wires, bars or cables), anchorage or connection devices, sheaths, grouting materials or other prestressing accessory shall be accompanied by a supply sheet whose contents comply with Annex 21 of this Code.

If the prestressing application system is covered by EC marking, the application procedure provided by the marking shall be supplied to the Project Manager.

90.5.2 Experimental control

90.5.2.1 Possible exemptions from the experimental control

The Project Manager may exempt the product from the carrying out of checks required by this Code for reception of various prestressing components when the product application system is covered by an officially recognised quality mark.

90.5.2.2 Experimental conformity control of prestressing units

If applicable, the Project Manager shall check compliance of prestressing units supplied to the work in accordance with the provisions of the design special technical specifications.

90.5.2.3 Experimental the conformity control of the anchorage and connection devices

Experimental control during supply shall be limited to checking apparent characteristics such as size and interchangeability of parts, absence of cracks or burrs that indicate defects in the manufacturing processes, etc. In particular, the state of surfaces that perform the function of retaining tendons (teeth, screws, etc.) shall be observed and also surfaces that must slide over each other during the wedge penetration process. The number of components subject to checking shall be, as minimum:

a) six for each batch received at the works.
b) 5% of those that must perform a similar function in the prestressing of each piece of part of the works.

When circumstances suggest that storage durational conditions may have affected the status of the services indicated above, the state before use shall be checked again.

90.5.2.4 Control of sheaths and prestressing accessories

In the case of sheaths, the experimental control shall be limited to checking apparent characteristics such as size, rigidity of sheath on crushing, absence of dents, absence of cracks or perforations that may affect watertightness, etc.

In particular, a check should be carried out to ensure that the sheath curvature, in accordance with the radiuses to be used in the works, do not give rise to appreciable local strains or breaks that may affect sheath watertightness.

A check shall also be carried out on the watertightness and resistance to crushing and impact of the joining part, control ports, connection fittings, etc., depending on the conditions to be used.

A check should also be carried out to ensure that the separator, if applicable, do not give rise to tapering of the reinforcement or major difficulty in injection.

When storage has been prolonged or conducted under poor conditions for any reason, a minute check shall be carried out to assess whether any rest on the metal components may be damaged to watertightness or for any other reason.

90.5.2.5 Control of filling materials

When the materials used to prepare the injection grout (cement, water and, if applicable, admixtures) are of a different type or category to those used in manufacturing the concrete in the works, the criteria laid down for this purpose in this Code shall be applied for reception.

The Project Manager may require that the production control results on admixtures used, if appropriate, to give rise to the effect of producing the characteristics of the grout or water by means of appropriate laboratory tests. Specific work temperature conditions shall also be considered, if applicable, to prevent the need for the admixture to display aerating properties, if necessary.

90.6 Supply certificate

When supply to the work of any of the prestressing elements is complete, the Constructor shall provide the Project Manager with a certificate, drawn up by the Supplier and signed by a natural person, whose content shall comply with the provisions of Annex 21 of this Code. In the

case of prestressing systems with EC marking, the certificate shall form part of the EC marking documentation for prestressing elements supplied to the work.

Article 91. Control of precast elements

91.1 General criteria for the conformity control of precast elements

Compliance of precast elements with the provisions of the design shall be checked during reception at the work and include a check on compliance of behaviour and also with regard to the concrete and reinforcement and also the behaviour of the precast elements.

In accordance with the provisions in 79.3, in the case of precast elements or systems covered by EC marking as laid down in Directive 89/106/EEC, compliance may be sufficiently proven by checking that the categories or values declared in the documentation accompanying the said EC marking allow compliance of design specifications to be deduced, not being necessary the provision in the Royal Decree 1630/1980, on July18th.

In case of floor slabs systems including precast concrete elements not needing EC marking, will be applicable the provision in the Royal Decree 1630/1980, of July18th, on the production and use of resistant elements for floors and covers.

The Project Manager shall monitor the situation in particular to ensure sufficient criteria are maintained to guarantee traceability between components positioned permanently in the work and the materials and products used.

For the purposes of the control, the precasting of structural concrete elements shall include at least the following processes:

- processing of reinforcement,
- steelwork reinforcement,
- installation of passive reinforcement,
- prestressing operations, if applicable,
- manufacture of concrete, and
- pouring, compacting and curing of concrete.

The reception control for precast elements may include checks on the precasting processes and also the on the products used (concrete, reinforcement processed and prestressing steel) and also the final geometry of the components.

Reception control shall be carried out both on components precast in an industrial installation outside the work and also on those precast directly by the Constructor in his own work. The criteria of this Code shall also be applied to standardised components and components precast as standard, and also those precast specifically for a work, in accordance with a specific design.

The Supplier or, if applicable, the Constructor shall include in its production control system a system for following up each of the processes applied during its activity and shall define check criteria that allow the Project Manager to ensure that the referred processes have been carried out as laid down in this Code.

For this reason, the corresponding self-control registers shall show the results of all checks carried out for each of the activities applicable from among those laid down in this Code.

The Project Manager may require the Supplier or, if applicable, the Constructor to provide documentary evidence on any of the processes relating to precasting laid down in this Code and, in particular, information demonstrating the existence of a production control that includes all the characteristics specified by this Code and whose result s shall be recorded in self-control documents. It may also carry out, where necessary, appropriate controls in its own precasting installations and, if applicable, sampling for subsequent testing.

Precast elements processed using concrete compliant with EN 206-1:2000, the weighting coefficient of 1.70 for concrete and 1.15 for steel shall be applied to the prefabricate component design in a permanent or temporary situation. These coefficients may be used to 1.35 and 1.10 respectively in the event that the precast component is covered by a quality mark with a level of guarantee compliant with section 5.3 of Annex 19 f this Code. When presenting voluntarily a production control certificate drawn up by a control body or a certification entity accredited in all cases under the provisions of Royal Decree 2200/1995 of 28 December demonstrating that the concrete is manufactured in criteria laid down in this Code may be voluntarily submitted, a weighting coefficient of 1.50 may be applied for the concrete.

91.2 Sampling

If decided by the Project Manager, a quality control body shall carry out in its own installation, where the elements are precast, the sampling on consignments destined for the work. In the case of standardized precast components produced in serie, the sampling will be carried out on materials, products and components and also batches supplied to the work. Except in exceptional cases, the Project Manager shall take the samples at its own work.

The sampling may be attended by representatives of the Project Manager, the Constructor and the Supplier of precast elements.

The control organisation shall supervise the representativeness of the sample and shall not accept sampling from materials and reinforcements that do not correspond to those indicated in the design under any circumstances. Once the samples have been removed, the procedures laid down for this purpose in Articles 86 and 88 for the concrete and reinforcements respectively shall be carried out.

A quality control organisation shall draw up a certificate for each sampling operation to be signed by all parties present, who shall be given a copy. The certificate shall be drawn up in accordance with a model approved by the Project Manager at the beginning of the work, whose minimum contents are set out in Annex 21.

The sample size shall be sufficient to carry out all the checks and tests to be conducted. All samples shall be sent for testing to the control laboratory after being correctly taken and identified.

91.3 Testing

Any tests on precast elements or their components other than those set out in this section shall be carried as established for this purpose in the corresponding technical specifications or in accordance with the instructions of the Project Manager.

91.3.1 Checking the conformity of the precasting processes

Checking of the conformity of precasting processes by the Project Manager shall include at least processing of a passive reinforcement, its installation in the moulds, manufacture of the concrete and also pouring, compacting and curing of the concrete and, if applicable, prestressing application operations.

The compliance for each process shall be checked by applying the same procedures laid down in the Articles of this Code applying to the general case of construction of the structure in the site.

91.3.2 Tests for checking the conformity of products used in the precasting of structural elements

Tests to check required characteristics in accordance with this Code, for concrete, process reinforcements and prestressing components used in the precasting of structural elements shall be as generally defined in Articles 86, 88 and 90 of this Code.

91.3.3 Tests for checking the conformity of the geometry of the precast elements

The precast elements geometry shall be checked by measuring dimensional characteristics using a meter rule with divisions of at least 1.0 mm.

91.3.4 Checking the conformity of the cover of the reinforcement

Compliance of covers with requirements set out in the design shall be checked at the installation, reviewing the appropriate arrangements of spacers.

91.3.5 Other tests

Any tests or checks other than those laid down in this Code shall be carried as established for this purpose in the technical specifications or in accordance with the guidelines by the Project Manager.

91.4 Control prior to supply

The aim of control prior to supply is to check compliance of administrative conditions and also precasting installations by means of the corresponding documentary controls and checks.

91.4.1 Checking of documents

In additional to the general documents referred to in section 79.3.1, that are applicable to precast elements, the Supplier of the precast elements or the Constructor shall submit a copy certified by a natural person following documentation to the Project Manager:

a) where applicable, a copy certified by a physical person of the certificate guarantee that the precast elements that form the supply to the work hold an officially recognised quality mark,
b) where appropriate, certificates showing the qualifications of the staff carrying out non-resistant welding of passive reinforcement, guaranteeing their specific training for this procedure,
c) where applicable, weld type approval certificate in accordance with UNE-EN 287-1 and the welding process certificate in accordance with UNE-EN ISO 15614-1 in the event of passive reinforcement resistance welding,.
d) where applicable, a certificate that the steel for passive reinforcement, the steel for active reinforcements or the reinforced steelwork is covered by an officially recognised quality mark.

In the case of precast elements in accordance with the design that require a change to the original quartering cut shown in the design, the Supplier or, if applicable, the Constructor shall send the new cut for acceptance in writing to the Project Manager. In any case, before beginning the supply of precast elements in accordance with the design, the Project Manager may review the cut plans prepared specifically for the work components directly or through a quality control organisation.

When a change in Supplier occurs during the work, it will be necessary to re-submit the corresponding documents.

91.4.2 Checking of installations

The Project Manager shall assess the advisability of carrying out a control visit to the installation where the precast elements are processed directly or through a quality control body with the aim of checking:

- that the installations comply with all the requirements laid down in this Code and in particular those established in Article 76 of this Code,
- that the precasting processes are correctly carried out, and

- that a material stock management system is in place allowing the necessary traceability to be achieved.

These controls are required in the case of precasting installations belonging to the work.

The Prefabricator shall be able to demonstrate that its stock management and process controls guarantee traceability up to the delivery to the work including transport where applicable.

The Prefabricator or, where appropriator, the Constructor shall demonstrate that its concrete plant and its installations and equipment for its processing of the reinforcement and application of prestressing complies with the technical requirements laid down for the product in general in this Code.

91.4.3 Possible exemption from prior checks

If the precast elements are covered by an officially recognised quality mark, the Project Manager may exempt them from the document checks referred to in points b) an c) of section 91.4.1.

91.5 Control during supply

91.5.1 Control of documents during supply:

The Project Manager shall check that each consignment of precast elements supplied to the work is accompanied by the corresponding supply sheet, in accordance with the provisions set out in 79.3.1.

The Project Manager shall check that the documents supplied by the precast elements Supplier or, if applicable, by the Constructor, its compliance with material safety coefficients adopted in the design.

The Project Manager shall accept the precast component batch documents after checking that they are compliant with this Code and also with the specifications laid down in the design.

91.5.2 Tests for checking the conformity of the materials used

The Project Manager shall check that the Prefabricator or, if applicable, the Constructor has checked the compliance of products used directly for the precasting of the structural components and, in particular, that of concrete, that of processed reinforcements and that of prestressing components.

The concrete shall be inspected applying the criteria of Article 86 of this Code, and considering as a batch the set of the same type of concrete used to manufacture all components of the same type provided these have not been manufactured over a time period greater than three months.

Processed reinforcement shall be inspected by applying the criteria in Article 88 of this Code.

The Project Manager may use any of the following procedures to carry out the said checks:

- review of document registers where the responsible person in the precasting installation shall show controls carried out for reception and also the results,
- checking of reception procedures by means of control in the industrial installation,
- in the case of precast elements not covered by an officially recognised mark, by means of checks on samples taken in the precasting installations,

all this without prejudice to tests ordered by the Project Manager.

91.5.3 Experimental checks during supply:

The experimental checking of precast elements shall include a check on the compliance of products used, a check on precasting processes and a check on geometrical sizes.

A check should also be carried out to ensure that the components bear an identification code or marking that, together with the supply documents, provides information on the manufacturer, the manufacturing batch and date so that the traceability of materials used for the fabrication of each element may be checked.

91.5.3.1 Possible exemption from experimental checks

In the case of standard components industrially produced covered by EC marking as laid down in Directive 89/106/CEE, the Project Manager may accept their compliance without carrying out additional experimental checks by ensuring that the documentation accompanying the EC marking shows the declared categories or values allow compliance with specifications laid down in this Code and also those that may have been defined specifically in the design. In this case, it will be particularly recommended that Project Manager should carry out a control of the precasting installations referred to in section 88.4.2 either directly or through a control organisation.

In the case of standard components industrially produced and destined to form part of a compound section, together with other parts carried out on site, compliance may be checked in accordance with the provisions of the above paragraph when method 1 of those defined in section 3.3 of Guide L for the application of Directive 89/106/EEC produced by the European Commission Services (document CONSTRUCT 03/629 Rev.1, dated 27 November 2003) has been used.

In accordance with the contents of section 3.2 of the Guide L for the application of Directive 89/106/EEC produced by the European Commission Services (document CONSTRUCT 03/629, Rev. 1, the compliance of the components referred to in the above paragraph may be accepted only when the documents accompanying the EC marking guarantee compliance with the parameters, classes and levels specifically defined by the Spanish Administration in the corresponding National Annexes for UNE-EN 1990 standard applicable to the corresponding precast component.

When method 3 of those defined in section 3.3 of Guide L described above have been used, compliance of precast elements may be checked in accordance with the provisions of paragraph 1 of this section by checking that the documents accompanying the said EC marking show the use of materials as indicated in the design and that this is compliant with the specifications in this Code.

In the case of precast elements not covered by EC marking that are covered by an officially recognised quality mark the Project Manager may exempt the products from any of the experimental checks laid down in section 91.5.3.3 and 91.5.3.4.

91.5.3.2 Batches for checking the conformity of precast elements

In the case of standard components precast as standard, a batch shall be defined as the quantity of components of the same type, forming part of the same consignment and obtained from the same manufacturer, provided that their date of manufacture do not differ by more than three months.

In the case of components precast specifically for the work in accordance with a specific design, all components in the same consignment from the same manufacturer are defined as a batch.

91.5.3.3 Experimental checking of precasting processes

This check will be carried out at least once during the work and shall include both a review of the Prefabricator production process and the conduct of specific checks on each process, carried out by a quality control organisation.

In the case of standard elements precast as standard, the Project Manager may limit this check to a review of the production control to be carried out on the self-control registers corresponding to the time period during which the components supplied to the works were manufactured.

Experimental checks on the process should be carried out in accordance with the following criteria:

a) Passive reinforcement processes procedure:
Checks should be carried out on compliance of reinforcement with the design in accordance with the criteria in Article 88 of this Code.

b) Passive reinforcement installation process:
Before placing in the mould, a check shall be carried out to ensure that the processed reinforcement, once ensemble, correspond with requirements laid down in the design with regard to geometrical size, steel cross sections and overlapping lengths.
Once placed on the mould, a check shall be carried out to ensure that spacers have been positioned in accordance with the requirements laid down in section 69.8.2 and that their sizes allow the corresponding minimum coverage laid down in section 37.2.4 to be ensured.
Checks should be carried out on a sample of at least five reinforcement sets and process compliance should be accepted when steel diameters shall be obtained from all samples that correspond to those laid down in the design and, also, the rest of the checks give deviations from nominal values less than the tolerances specified in Annex 11 for the class corresponding to safety coefficients used in the design.

c) Prestressing application process:
The prestressing application process shall be checked at least once by applying the criteria laid down in Article 89 of this Code. The corresponding check shall be carried out before the corresponding tensioning checks, before the concrete pouring and, if applicable, before the injection.
Process compliance shall be accepted when no deviation from the criteria laid down in Article 90 is detected.

d) Poured, compacted and cured concrete processes:
If the concrete is elaborated by the Prefabricator, the fabrication processes shall meet the same technical criteria than those laid down for the concrete plants in this Code apart from requirements relating to shipping. The pouring, compacting and curing shall also comply with the criteria laid down, in general, by this Code.
One control shall be carried out at least once during the work to check compliance with the requirements specified for these processes.

91.5.3.4 Experimental checking of the geometry of the precast elements

In the case of elements precast with EC marking in accordance with specific harmonised European standards, the geometry shall be checked by inspecting the EC marking documents because the tolerances shall comply with those referred in the corresponding standards.

In other cases not covered in the above paragraph, for each batch defined in 91.5.3.2, one sample shall be selected made up by a sufficiently representative number of components in accordance with Table 91.5.3.4, preferably belonging to different shapes and types. A check shall be carried out to ensure that the geometrical sizes of each component display size variations in relation to nominal design sizes in accordance with tolerances laid down in Annex 11 of this Code for the class corresponding to the safety coefficient used in the design.

Table 91.5.3.4

Type of component supplied	Minimum number of components checked in each batch
Components such as piles, girders, blocks	10
Elements such as slabs, pillars, girder beams, …	3
Large components such as caissons, …	1

If non-compliance arises, the non-compliant component shall be discarded and a new set of samples shall be taken. If positive, the batch shall be accepted. Otherwise the Project Manager shall require from the Supplier a technical justification that the part complies with the established requirements in accordance with this Code as described under point 4.h) of Annex 11 of this Code.

91.5.3.5 Supply certificate

Once the precast elements have been supplied, the Constructor shall provide the Project Manager with a product certificate drawn up by the Supplier of the precast elements and signed by a natural person, whose content shall comply with the provisions of Annex 21 of this Code. In the case of precast elements that are required to be covered by EC marking, this certificate shall be added to accompany the said EC marking.

If the same Supplier of precast elements carries out various supplies during the same month, a single certificate may be accepted including all the elements supplied during the reference month.

CHAPTER 17

CONTROL OF THE CONSTRUCTION

Article 92. General criteria for the control of the construction

92.1 Control organization

The aim of the construction control, established as a requirement of this Code, is to check that the processes carried out during building of the structure are organised and carried out in such a way that the Project Manager may assume their compliance with the design in accordance with the provisions of this Code.

The Constructor shall process a work Plan and structural construction self-control procedure. The latter shall cover specific details of the work with regard to the methods, processes and activities that are to be carried out during monitoring of the construction in such a way that the Project Manager is able to check compliance with design specifications and the requirements laid down in this Code. For this reason, the results of all checks carried out shall be documented by the Constructor in self-control logs. It shall also manage stocks using a system that allows it to maintain and justify the traceability of batches and consignments received at the work in accordance with the level of control laid down in the design for the structure.

The Project Manager, representing the Owner, is obliged to inspect the construction, checking the constructor's self-control logs and carrying out a series of spot controls in accordance with the provisions laid down in this Code. The Project Manager may call on the technical assistance of a quality control body for this purpose in accordance with point 78.2.2.

Where appropriate, the Project Manager may exempt any structural construction processes covered by an officially recognised quality mark from external control.

92.2 Scheduling of the control of the construction

Before beginning the construction of the structure, the Project Manager shall approve the control Schedule, implementing the control Plan laid down in the design, taking into account the work Plan submitted by the Constructor for construction of the structure, and also the self-control procedures as laid down in section 79.1 of this Code.

The construction control schedule shall identify, inter alia, the following:

- Control levels
- construction batches
- control units
- check frequency

92.3 Levels of control of the construction

For the purposes of this Code, two control levels are considered:

a) Normal level construction control
b) Intense level construction control

The intensive level control level shall be applicable only when the Constructor holds a certified quality system in accordance with UNE-EN ISO 9001.

92.4 Construction batches

The control Schedule approved by the Project Manager shall consider the division of the work into construction batches in accordance with the implementation laid down in the work Plan for its construction and in accordance with the following criteria:

a) correspondence with the successive parts in the work construction process,
b) components of a structurally different type that belong to different columns of Table 92.4 shall not be mixed,
c) the batch size shall not exceed that shown in Table 92.4, depending on the type of components.

Table 92.4

Type of work	Foundations	Horizontal elements	Other elements
Buildings	- Ground plates, piles and pile caps corresponding to 250 m^2 of area - 50 m of screens	- Beams and flooring corresponding to 250 m^2 of ground plan	- Beams and pillars corresponding to 500 m^2 of area, not exceeding two storeys - Containing walls corresponding to 50 ml, without exceeding 8 places - "In situ" pillars corresponding to 250 m^2 of flooring
Bridges	- Ground plates, piles and pile caps corresponding to 500 m^2 of area, not exceeding three foundations - 50 m of diaphragm wall	- 500 m^3 of deck, not exceeding 30 linear m, neither a span or arch stone	- 200 m^3 of piles, not exceeding 10 m of pile length - two abutments
Chimneys, towers, silos	- Ground plates, piles and pile caps corresponding to 250 m^2 of area - 50 m of diaphragm wall	- Horizontal elements corresponding to 250 m^2	Elevationscorresponding to 500 m^2 of area or 10 m in height

92.5 Control units

For each construction batch, all processes and activities that may be controlled in accordance with the provisions in this Code shall be identified.

For the purposes of this Code, a control unit is intended to mean the maximum dimensional size of a process or activity that may be checked, in general, during an control visit to the work. Depending on the process development and activities required in the work Plan, each control visit to the work by the Project Manager or control body may check a given number of control units, which may correspond to one or more construction batches.

For each process or activity, the corresponding control unit shall be defined, whose dimension or size shall comply with the provisions in Table 92.5.

Table 92.5

Construction units	Maximum size of control unit
Stock management control	- Stock pile ordered by material, method of supply, manufacturer and batch supplied, where applicable
Operations prior construction. Layout.	- Level or storey to be constructed
Falsework	- 3000 m^3 of falsework
Forms and moulds	- 1 level of bracing - 1 level of support form work, - 1 level of bracing per construction storey - 1 span, in the case of bridges
Cut of plans for reinforcements designed in accordance with the design	- Plans corresponding to one reinforcement consignment.
Installation of reinforcements by means of ties	- Set of reinforcements processed each day
Installation of reinforcements by welding	- Set of reinforcements processed each day
Geometry of fitted reinforcement	-Set of reinforcements processed each day
Positioning of reinforcement in forms	- 1 level of support (storey) in building, - 1 level of flooring (storey) in building - 1 span, in the case of bridges
Prestressing application operations	- Prestressing arranged on the same anchorage plate in case of post-tensioning - Total prestressing in case of pre-tensining
Pouring and laying of concrete	- One day - 120 m^3 - 20 mixtures
Concrete finishing operations	- 300 m^3 of concrete volume - 150 m^2 of concrete surface
Concrete joint construction	- Joints constructed in the same day
Concrete curing	- 300 m^3 of concrete volume - 150 m^2 of concrete surface
Removing from forms and moulds	- 1 level of bracing, - 1 level of support formwork, - 1 level of bracing per building storey - 1 span, in the case of bridges
Removing the falsework	- 3000 m^3 of falsework
Joining of precast elements	- Joints carried out during the same day, - Floor plan

In the case of engineering works of minor importance and also building works without any special structural complexity (made of conventional beams, pillars and floors, not prestressed, with openings of up to 6.00 metres and a number of storeys no greater than seven) the Project Manager may opt to double the maximum size of the control units indicated in Table 92.5.

92.6 Checking frequencies

The Project Manager shall carry out the construction control by means of:

- a review of the Constructor's self-control for each control unit,
- external control of the construction of each batch by carrying out spot controls on processes or activities corresponding to some of the control units in each batch as indicated in this Article.

For each process or activity included in one batch, the Constructor shall carry out its self-control and the Project Manager shall carry out its external control by carrying out a number of controls that varies according to the control level laid down in the control programme and in accordance with the contents of table 92.6.

Table 92.6

Construction processes and activities	Minimum number of activities inspected externally per control unit			
	Normal control		Intense control	
	Constructor's self-control	External control	Constructor's self-control	External control
Falsework	1	1	All	50%
Forms and moulds	1	1	3	1
Cut of plans for reinforcements designed in accordance with the design	1	1	1	1
Installation of reinforcements by means of ties	15	3	25	5
Installation of reinforcements by welding	10	2	20	4
Geometry of allaborated reinforcement	3	1	5	2
Positioning of reinforcement in forms	3	1	5	2
Prestressing application operations	All	All	All	All
Pouring and laying of concrete	3	1	5	2
Concrete finishing operations	2	1	3	2
Concrete joint construction	1	1	3	2
Concrete curing	3	1	5	2
Removing from forms and moulds	3	1	5	2
Removing the falsework	1	1	3	2
Joining of precast elements	3	1	5	2

Article 93. Checks prior to the start of construction

Before the start of construction for each part of the work, the Project Manager shall check for the existence of a reception control programme for both products and the construction that has been drawn up specifically for the work, in accordance with the information given from the design and laid down in this Code.

Any breach in the previously established requirements shall delay the start of the work until the Project Manager obtains documentary evidence that the cause of the said non-compliance has been resolved.

Article 94. Control of the construction processes prior to the reinforcement being put in place

94.1 Control of the location of the structure

A check should be carried out that the components axis, dimensions and geometry of sections display position and dimensional parameters that deviate from the design to an extent compliant with the tolerances indicated in Annex 11, for safety coefficients of materials used in structural calculation.

94.2 Control of the foundations

Depending on the type of foundation, at least the following controls should be carried out:

a) In the case of surface foundations:

- check that in the case of ground plates adjacent to party walls the necessary precautions have been taken to prevent damage to existing structure,
- check that compacting of the ground on which the ground plate rests is consistent with requirements laid down in the design,
- check, where applicable, that appropriate measures have been adopted to eliminate water,
- check, where applicable, that blinding concrete has been poured to ensure the thickness is as specified in the design.

b) In the case of deep foundations:

- check the size of drillings in the case of piles constructed in situ, and
- check that the pile concrete head removal does not cause damage to the pile or to the anchorage reinforcement whose length shall be compliant with requirements set out in the design.

94.3 Control of the falsework and underpinning

During construction of the falsework, a check should be carried out to ensure that it corresponds with the design plans, with particular attention to bracing components and support systems. The said reviews of assembly and disassembly shall also be carried out, checking that requirements set out in the corresponding written procedures are complied with.

In general, a check shall be carried out to ensure that all assembly and disassembly processes and, if appropriate, falsework or rebracing operations are carried out in accordance with the requirements laid down in the corresponding design.

94.4 Control of formwork and moulds

Before pouring the concrete, a check shall be carried out to ensure that the geometry of sections complies with the requirements set out in the design, accepting the geometry provided it is within the tolerances laid down in the design, or otherwise in Annex 11 of this Code. The aspects indicated in section 67.3 of this Code shall also be checked.

In the case of formwork or moulds where external vibration elements are required, their location and operation shall be checked beforehand, accepting the components when the onset of problems is not foreseen once the concrete has been poured.

Before concrete pouring, a check should be run to ensure that the interior surfaces of the formwork and moulds are clean and that the corresponding mould removal product has been applied, if applicable.

Article 95. Control of the process of assembly of passive reinforcements

Before assembling the reinforcements, appropriate control shall be carried out to ensure that the reinforcement process, using wire ties or non-resistant welding, has been carried out in accordance with the provisions of Article 69 of this Code. A check should also be carried out to ensure that the anchorage and floor lengths correspond with the requirements set out in the design.

A specific check should be carried out to ensure that welds carried out in the work installations and in the case where mechanical connection devices are used, the Constructor shall be required to supply a corresponding certificate, signed by a natural person, guarantee its mechanical performance.

Preferably before positioning in the moulds or formwork and, in any case, before pouring the concrete, the true geometry of the fitted reinforcement and its correspondence with design plans shall be checked. The arrangement of separators, distance between separators and sizes shall also be checked to ensure that no actual overlaps less than the minimum laid down in this Code are present at any point in the structure.

In the event that any type of auxiliary steel elements have been used to facilitate the reinforcement of the steelwork, for example, to guarantee separation between stirrups, a check shall also be carried out to ensure that these also display an overlap of at least a minimum requirement.

Under no circumstances will the positioning of reinforcements with less cross section of steel than laid down in the design be accepted, even when this has occurred as a consequence of an accumulation of tolerances with the same sign.

Article 96. Control of the prestressing operations

96.1 Control of the tensioning of the active reinforcements

Before beginning the tensioning, the following shall be checked:

- in the case of post-tensioned reinforcements, that the tendons slide freely in their ducts or sheaths,
- that the concrete strength has reached, as a minimum, the value shown in the design for transfer of pre-tensioned force to the concrete. For this reason, if the concrete strength control test indicated in Article 88 shall be carried and the informative tests specified in Article 89 if these are not sufficient.

The magnitude of the prestressing force introduced shall be controlled in accordance with the requirements set out in section 70.3, simultaneously measuring the force exercised by the jack and the corresponding extension to which the reinforcement is subject.

To certify this check, the reading values recorded using the appropriate measuring equipment used shall be noted in the corresponding tensioning table.

During the first ten tensioning operations carried out in each work and for each prestressing equipment or system, the measurements required to find out the magnitude of movements caused by the penetration of wedges and their effects shall be measured with the effect of being able to carry out appropriate corrections in the force or extension values to be noted.

96.2 Control of the grouting process

Conditions to be met by performance of the injection operation shall be as indicated in section 70.4.

The time elapsing between the end of the first tensioning stage and performance of the injection shall be checked.

The following control shall be carried out on a daily basis:

- mixing time,
- water/cement ratio,
- quantity of admixtures used,
- viscosity, using the Marsch cone, at the time of beginning the injection,
- viscosity when the grout emerges from the final outlet pipe,
- a check to ensure all air has emerged from inside the sheath before sealing the various outlet pipes,
- injection pressure,
- leaks,
- recording of maximum and minimum environmental temperature on the days when injections are carried out and during the two subsequent days, particularly in cold weather.

Every ten days when injection operations are carried out and no less than once, the following tests should be carried out:

- grout or mortar strength by taking 3 samples to be broken after 28 days,
- exudation and reduction in volume, in accordance with 35.4.2.2.

In the case of pre-tensioning systems covered by an officially recognised quality mark, the Project Manager may exempt the products from any of experimental injection control check.

Article 97. Control of the concreting processes

Before beginning to supply the concrete, the Project Manager shall check that the circumstances are correct for carrying out pouring accurately in accordance with the provisions of this Code. A check shall also be carried out to ensure that the appropriate equipment for installation, compacting and curing of the concrete is available.

In the case of extreme temperatures, under the terms of 71.5.3, a check should be run to ensure that the precautions set out in the said sections have been taken.

A check should be run to ensure that cold joint is not formed between different pouring layers and that segregation is avoided during pouring of the concrete.

The Project Manager shall check that curing is carried out appropriately during at least the time period indicated in the design or otherwise as indicated in this Code.

Article 98. Control for processes following concreting

Once the concrete has been removed from the mould or formwork, a check should be carried out to ensure the absence of significant defects on the concrete surface. If holes, honeycombing or other defects that, due to their nature, may be considered unacceptable with regard to requirements laid down, where applicable, in the design, the Project Manager shall assess the advisability of repairing the defects and coating the surfaces if necessary.

If the design has laid down any specific requirements relating to the appearance of the concrete and its finishes (colour, texture, etc.), these characteristics shall be subject to control once the component has been removed from the mould or formwork and under the conditions laid down in the corresponding special technical specifications for the design.

The Project Manager shall also check that stripping is carried out in accordance with the plan laid down in the design and checking that the mechanical conditions that may have been established for the concrete are met, where applicable.

Article 99. Control of the assembly and joints of precast elements

Before beginning to install precast elements, the Project Manager shall carry out the following checks:

a) precast elements should comply with design specifications and appropriately stored, where applicable, without displaying apparent damage,
b) plans should be available that sufficiently define the precast component assembly process and also possible additional measures (provisional bracing, etc.)
c) availability of a construction program that clearly defines the assembly sequence for precast elements, and
d) availability of the human and material resources, where necessary, for assembly.

During assembly, a check should be carried out to ensure that all design instructions are complied with. Particular attention shall be devoted to maintaining dimensions and construction conditions for support, links and joints.

Article 100. Control of the constructed components

Once construction of each stage of the structure has been completed, it shall be inspected with the aim of checking that it complies with design dimensional specifications.

If the design adopts in the calculations reduced materials adjustment factors in accordance with the information given in section 15.3, it shall be checked, in particular, that the geometrical tolerances laid down in the design are met or otherwise those indicated for the purpose in Annex 11 of this Code.

Article 101. Control of the structure by means of tests for additional information

101.1 General

When structures have been designed and built in accordance with this Code, where the materials and construction achieve the required quality, only the cases set out below need to undergo tests on additional information, in particular load tests:

a) when laid down in the Code, specific regulations for a type of structure or special

technical specifications,

b) when it is advisable to check that the structure meets certain specific conditions due to its nature, In this case the special technical specifications shall establish appropriate tests to be carried out, accurately indicating the test method and the results interpretation method.

c) when the Project Manager feels that reasonable doubt exists over the safety, function or durability of the structure.

101.2 Load tests

Many situations exist where it may be advisable to carry out load tests on structures. In general, load tests may be grouped in accordance with their purpose into:

a) Regulation load tests.

These are all the tests laid down in the Special Technical Specifications or Guidelines or Regulations, which involve carrying out a test to certify the behaviour of the structure in situations representing service actions. Regulations covering road and rail bridges establish, in all cases, the need to carry out load tests before the work is accepted. The purpose of such tests is to check the proper design and good construction of the structures with regard to standard service loads, checking whether the work behaves in accordance with the theoretical assumptions and thus ensuring its function.

It musts also be added that load tests can supply valuable research data that may be used to confirm design theories (load distribution, turning of supports, maximum deflection) and may be used in future designs.

These tests shall not be carried out before the concrete has reached the designed strength. Various load systems, both static and dynamic, may be considered.

Dynamic tests are required in road and rail bridges and structures where a considerable vibration effect may be predicted in accordance with corresponding action Guidelines. In particular, the latter point affects bridges with spans greater than 60 m or an unusual design, the use of new materials and slender walkways and transit areas where the onset of vibration that may even cause disturbance to users. The design and performance of this type of test shall be carried by technical teams experienced in this type of testing.

Assessment of regulation load tests requires previous preparation of a load test design that shall consider the difference between the implementation of actions (dynamic or static) in each case. As a general rule, unless otherwise justified, the results shall be considered satisfactory when the following conditions are met:

- During the test, cracks do not arise that do not correspond with those envisaged in the design and that may compromise the durability and safety of the structure.
- The measured deflections do not exceed values laid down in the design as maximums compatible with the correct use of the structure.
- Experimental measurements determined in tests (rotations, deflections, vibration frequencies) do not exceed the maximum calculated in the load test design by more than 15% in the case of reinforced concrete and 10% in the case of prestressed concrete.
- The residual deflection after withdrawing the load taking into account the time the load was maintained is sufficiently small to be able to assume that the structure's behaviour is essentially elastic. This condition shall be satisfied after one load-unload cycle and, if it is not achieved, the results shall be acceptable if the criteria are met after a second cycle.

b) Load tests as additional information

Sometimes it is advisable to carry out load tests as a method to obtain additional information on changes or problems that could have arisen during construction. Except in cases where the

safety of the structure is questioned, service action shall not be exceeded in this type of test and the performance, analysis and interpretation criteria to be followed are similar to those describe in the previous case.

c) Load tests to evaluate bearing capacity

In some cases load tests may be used as a means of evaluating the safety of structures. In such cases, the loads to be applied shall be a fraction of the theoretical load greater than the service load. Such tests always require the drawing up of a Test Plan that evaluates the feasibility of the test and for the test to be conducted by an organisation experienced in this type of work and managed by a competent engineer.

The Test Plan shall include, inter alia, the following aspects:

- Test feasibility and purpose.
- Parameters to be measured and location of measurement points.
- Measurement procedures.
- Load and unload steps
- Safety measures.

This final point is very important because failure or partial or total breakage of the tested elements may occur in this type of test.

Such tests are basically applied to elements subject to bending. The following criteria shall be followed for their performance:

- Structural components subject to testing shall have aged for at least 56 days or it shall have been checked that the actual strength of the concrete in the structure has reached the nominal values laid down in the design. Provided it is possible and if the components to be tested will be subject to permanent loads not yet applied, 48 hours before the test, the corresponding replacement loads shall be arranged to act on the tested elements throughout the test.
- Initial reading shall be taken immediately before arranging the test load.
- The area of the structure subject to the test shall be subject to a total load, including permanent acting loads, equivalent to 0.85 (1.35 G + 1.5 Q), where G is the permanent load that it has been determined will act on the structure and Q are the foreseeable overloads.
- Load tests shall be organised into at least four approximately equal stages, avoiding impact on the structure and the formation of unload arches in the materials used to apply the load.
- 24 hours after the total test load has been positioned, readings shall be taken at the required measurement points. Immediately after recording the readings, unloading shall begin and final readings shall be recorded up to 24 hours after withdrawing all loads. Continual recordings shall be carried out of existing temperature and humidity conditions during the test with the aim of carrying out the appropriate corrections, if relevant.
- During the load tests, appropriate safety measures shall be adopted to prevent a possible accident during the course of the test. Safety measures shall not interfere with the load tests or affect the results.

The test results shall be considered satisfactory when the following conditions are met:

- None of the components in the test structural area displays unforeseen cracks that affect structural durability or safety. The maximum deflection obtained is less than

$l^2/20000$ h, where l is the theoretical span and h the component depth. If the tested element is a cantilever, l shall be twice the distance between the support and the end.

- If the maximum deflection exceeds $l^2/20000$ h, the residual deflection once the load has been withdrawn and 24 hours have passed, shall be less than 25% of the maximum in reinforced concrete components and less than 20% of the maximum in prestressed concrete elements. This condition shall be satisfied after the first load-unload cycle. If not complied with, a second load-unload cycle shall be carried out 72 hours after the end of the first cycle. In this case, the result shall be considered satisfactory if the residual deflection obtained is less than 20% of the maximum deflection recorded in this load cycle for all types of structure.

101.3 Other non destructive tests

This type of test shall be used to assess properties of concrete in the structure other than strength, or properties of reinforcement that may affect their safety and durability.

Article 102. Control of environmental aspects

The Project Manager shall ensure compliance with special environmental conditions that have been laid down in the design, where applicable, for construction of the structure.

If the Owner has laid down requirements relating to the structure's contribution to sustainability in accordance with Annex 13 of this Code, the Project Manager shall check that the same level (A, B, C, D or E) defined in the design for the ICES index is met with the actual methods and procedures used during the construction.

CHAPTER 18

MAINTENANCE

Article 103. Maintenance

103.1 Definition

Maintenance of a structure is understood to be the set of activities required to ensure that the level of performance for which it has been designed, under the criteria laid down in these This codes, do not fall below a certain threshold during the useful life of the design, which are determined by mechanical, durability, functional and, where appropriate, aesthetic characteristics. For this reason, from the time the structure is commissioned, the Owner shall plan and carry out the maintenance activities indicated in this Article in a manner consistent with the criteria adopted in the design.

When specific maintenance regulations exist based on the characteristics of the work, these shall be applied together with those indicated in these This codes.

Maintenance is an activity of a preventive nature that prevents or delays the onset of problems that would otherwise be more complicated and financially costly to resolve.

103.2 Maintenance strategy

Activities relating to the maintenance of the structure are part of a more extensive general framework that may be described as a “structural management system”. Maintenance activities are a great responsibility and it is a requirement that they should be carried out by staff with the necessary training and resources.

When managing these assets, the following aspects shall be considered from an operational viewpoint:

- For documentary archive for the structure The Owner shall be responsible for preserving the full Construction Design and also any subsequent design that may become necessary due to repairs, reinforcements, extensions, etc., and also memos or reports connected with the history of the structure.
- Routine inspections. The Owner is also responsible for carrying out routine inspections that allow the correct operation of components connected with the operation and durability of the structure to be ensured. In this sense, as an example, period operations shall be carried out to clean drainage components, repair waterproofing components, joints, etc., in general, auxiliary components, non structural components with a useful life less than that of the structure whose degradation could negatively affect that of the structure. The frequency of such inspections shall be established by the Designer, depending on the operational, seasonal conditions, etc.
- Main inspections, carried out on the request of the Owner, by qualified engineers experienced in this type of work, as indicated in 103.3.
- Special inspections and load tests that require specific monitoring of the structure and later analytical assessment for the formulation of diagnoses.

It is the Owner's responsibility to organise maintenance tasks around the operating guidelines given with the aim of providing information closely related to the long-term performance level of the structure at all times.

103.3 Maintenance plan

In the design of all types of structure, within the framework of this Code, it shall be obligatory to include an Inspection and Maintenance Plan that defines operations to be carried out throughout the useful life of the structure.

The Inspection and Maintenance Plan shall contain a specific definition of at least the following points:

- Description of the structure and exposure classes of its components.
- Useful life considered.
- Critical structural points, highlighted as requiring special attention for the purposes of inspection and maintenance.
- Regularity of inspections.
- Auxiliary equipment for access to the different areas of the structure, where appropriate.
- Recommended inspection methods and criteria.
- Identification and description of the recommended maintenance methods, where this need is identified, to an appropriate level of detail.

The main inspection of the structure shall be defined as the set of technical activities carried out in accordance with a prior plan that allows, where applicable, the detection of damage displayed by the structure, its user's operating, durability and safety conditions and also allow future behaviour to be predicted.

This task is of enormous importance and requires the contribution of engineers with certified training, resources and experience.

The process begins with the carrying out of a main, initial or status 0 inspection that is the outcome of an inspection carried out on the constructed components (Article 79). From this point, subsequent main inspections are carried out different intervals that take into account developments in the condition of the structure.

Having assessed the state of the structure and, where applicable, its speed of deterioration by comparison with previous inspections, the process shall specify whether a special inspection should be undertaken or whether, on the contrary, it is possible to wait until the next main inspection planned in accordance with the protocol laid down by the Design Author or, where applicable, by the Owner.

The frequency with which main inspections are carried out shall be defined by the Design Author in the corresponding Inspection and Maintenance Plan and shall not be less than that laid down by the Owner, where appropriate.

ANNEX 1

Notation and units.

1 Notation

This Annex includes only those symbols which are most often used in this Code.

1.1 Latin upper case

A	Area. Water content of concrete. Ultimate strain.
A_c	Area of a concrete section.
A_{ct}	Area of the tension zone of a concrete section.
A_e	Effective area.
$A_{e,k}$	Characteristic value of the seismic action.
A_i	Initial area of a cross-section.
A_k	Characteristic value of an accidental action.
A_l	Area of the longitudinal reinforcements.
A_p	Total cross-sectional area of the active reinforcements.
A'_p	Total cross-sectional area of the active reinforcements in the compression zone.
A_s	Cross-sectional area of a tension reinforcement (simplification: A).
A_{sc}	Cross-sectional reinforcement area of a strut.
A'_s	Cross-sectional area of a compression reinforcement (simplification: A').
A_{s1}	Cross-sectional area of a tension or less compressed reinforcement (simplification: A_1).
A_{s2}	Cross-sectional area of a compression or more highly compressed reinforcement (simplification: A_2).
$A_{s,req}$	Required section of steel.
$A_{s,actual}$	Actual section of steel.
A_{st}	Cross-sectional area of a transverse reinforcement (simplification: A_t).
A_{sw}	Total area of punching shear reinforcement within a perimeter concentric to the support or loaded area.
C	Torsional moment of inertia. Cement content of concrete.
C_d	Permitted limit value for the Limit State to be checked.
C_s	Chloride concentration in the surface of the concrete.
C_{th}	Critical chloride concentration.
D	Effective chloride diffusion coefficient.
D_0	Basic curing parameter.
D_1	Curing parameter as a function of cement type.
E	Modulus of elasticity
E_c	Modulus of elasticityof concrete.
E_d	Design value of the effect of actions.
$E_{d,stb}$	Design value of the effects of stabilising actions.
$E_{d,dst}$	Design value of the effects of destabilising actions.
E_{oj}	Initial longitudinal modulus of elasticityof concrete at age of d days.
E_j	Instantaneous secant longitudinal modulus of elasticity of concrete at the age of d days.
E_p	Longitudinal modulus of elasticityof active reinforcement.
E_s	Modulus of elasticity of steel.

F	Action. Fly ash content of concrete.
F_d	Design value of an action.
F_{eq}	Value of the seismic action.
F_k	Characteristic value of an action.
F_m	Mean value of an action.
F_{sd}	Design punching shear force.
$F_{sd, ef}$	Effective design punching shear force.
G	Permanent load. Transverse modulus of elasticity.
G_k	Characteristic value of a permanent load.
G_{kj}	Characteristic value of permanent actions.
G^*_{kj}	Characteristic value of permanent actions with a non-constant value.
I	Moment of inertia.
I_c	Moment of inertia of a concrete section.
I_e	Equivalent moment of inertia.
ICES	Index of contribution of the structure to the sustainability.
ISMA	Index of environmental sensitivity.
K	Any coefficient or factor.
K_c	Stiffness of a support. Carbonation coefficient.
K_{Cl}	Coefficient of chloride penetration.
K_{ec}	Equivalent stiffness of a support.
K_n	Estimating coefficient for checking the strength of concrete.
K_t	Stiffness of torsional tie.
L	Length. Thermal weighting factor.
M	Bending moment.
M_a	Total bending moment.
M_d	Design bending moment.
M_f	Cracking moment under simple bending.
M_g	Moment due to permanent loads.
M_{ref}	Reference bending moment associated with a given depth x/d.
M_u	Ultimate bending moment.
N	Normal force.
N_d	Design value of normal force.
N_k	Axil force acting on a member.
N_u	Ultimate normal force.
P	Prestressing force, ultimate load.
P_k	Characteristic value of the prestressing force.
P_{kf}	Final characteristic value of the prestressing force.
P_{ki}	Initial characteristic value of the prestressing force.
P_o	Tensioning force.
Q	Variable load.
Q_k	Characteristic value of Q.
R_d	Design value of the structural resistance.
R_F	Design value of the fatigue strength.
S	Stress. First-order moment of an area.
S_d	Design value of the actions.
S_F	Design value of the effect of fatigue sections.
S_{u1}	Ultimate sliding shear force due to compression.
S_{u2}	Ultimate sliding shear force due to tension.
S_{su}	Contribution of the perpendicular reinforcement in plane P to the shear strength.
T	Torsional moment. Temperature.
T_a	Mean ambient temperature during production.
T_c	Maximum curing temperature during production.
T_d	Design torsional moment.
T_u	Ultimate torsional moment.
U_c	Mechanical capacity of concrete.

U_s	Mechanical capacity of steel (simplification: U).
V	Shear force. Volume.
V_{cu}	Contribution of the concrete to the shear capacity in the Ultimate Limit State.
V_{cd}	Design value of the component, parallel to the section, of the resultant of normal stresses.
V_{corr}	Corrosion rate.
V_d	Design shear force.
V_{pd}	Design value of the component of the prestressing force parallel to the section under study.
V_{rd}	Effective design shear force.
V_{su}	Contribution of the steel to shear force in the Ultimate Limit State.
V_u	Ultimate shear force.
W	Wind load. Section modulus.
W_c	Volume of confined concrete.
W_{sc}	Volume of hoops and stirrups.
X	Reaction or force in general, parallel to the x axis.
Y	Reaction or force in general, parallel to the y axis.
Z	Reaction or force in general, parallel to the z axis.
Z_m	Mean value of the maximum water penetration depths in concrete.

1.2 Latin lower case

a	Distance. Deflection.
a_r	Redistribution length.
b	Width; width of a cross-section.
b_e	Effective width of the flange in a T-beam.
b_w	Width of the web or rib in a T-beam.
c	Cover.
c_{air}	Coefficient of aireantes.
c_{env}	Coefficient of ambient.
c_h	Horizontal or lateral cover.
c_v	Vertical cover.
d	Effective depth. Diameter.
d'	Distance from the most compressed fibre of the concrete to the centre of gravity of the compression reinforcement ($d'=d_2$).
e	Eccentricity. Hypothetical thickness.
e_e	Equivalent eccentricity.
f	Strength. Deflection.
f_{1cd}	Maximum strength of compressed concrete.
f_{2cd}	Strength of concrete for biaxial compression states.
f_{3cd}	Strength of concrete for triaxial compression states.
f_c	Compressive strength of concrete.
f_{cc}	Compressive strength of confined concrete.
f_{cd}	Design compressive strength of concrete.
f_{cf}	Flexural strength of concrete.
f_{cj}	Compressive strength of concrete at age of d days.
f_{ck}	Characteristic compressive strength of concrete.
$f_{ck,j}$	Characteristic compressive strength of concrete at age of d days.
f_{cm}	Mean compressive strength of concrete.
$f_{c,actual}$	Actual characteristic strength of concrete.
f_{ct}	Tensile strength of concrete.
$f_{ct,d}$	Design tensile strength of concrete.
$f_{ct,k}$	Characteristic tensile strength of concrete.
$f_{ct,fl}$	Flexural strength of concrete.

$f_{ct,m}$	Mean tensile strength of concrete.
f_{cv}	Virtual design shear strength of concrete.
$f_{c,est}$	Estimated characteristic strength.
f_{max}	Maximum tensile stress.
f_{maxk}	Ultimate stress of steel in active reinforcements.
f_{pd}	Design strength of active reinforcements.
f_{pk}	Characteristic yield strength of active reinforcements.
f_{py}	Apparent yield strength of active reinforcements.
f_s	Ultimate stress of steel.
f_{td}	Design tensile strength of steel in hoops or stirrups.
f_y	Yield strength of 0.2%.
$f_{yc,d}$	Design compressive strength of steel.
f_{yd}	Design yield strength of a steel.
f_{yk}	Characteristic yield strength of passive reinforcements.
$f_{yl,d}$	Design strength of steel in a longitudinal reinforcement.
$f_{yp,d}$	Design strength of reinforcement A_p.
$f_{yt,d}$	Design strength of steel in reinforcement A_t.
g	Distributed permanent load. Acceleration due to gravity.
g_d	Design permanent load.
h	Overall depth or diameter of a cross-section. Thickness. Hours.
h_e	Effective thickness.
h_f	Thickness of the plate in a T-beam.
h_o	Actual thickness of the wall in the case of hollow sections.
i	Radius of gyration.
i^2_s	Radius of gyration of the set of reinforcements about the axis.
j	Number of days.
k	Any coefficient or factor with dimensions.
l	Length; span.
l_b	Anchorage length.
l_e	Buckling length.
l_o	Distance between points of zero moment.
m	Bending moment per unit length or width.
n	Number of objects taken into account. Coefficient of equivalence.
p_f	Overall probability of failure.
q	Distributed variable load.
q_d	Design overload.
r	Radius.
r_{min}	Minimum cover.
r_{nom}	Nominal cover.
s	Spacing. Standard deviation.
s_m	Mean spacing.
s_t	Spacing between planes of transverse reinforcements.
s_l	Spacing between longitudinal reinforcements in a section.
t	Time. Theoretical age.
t_d	Design working life.
t_g	Characteristic working life.
t_i	Corrosion start time.
t_L	Considered working life.
t_p	Corrosion propagation time.
t_s	Age of concrete at start of shrinkage.
u	Perimeter.
v_{corr}	Velocity of corrosion.
w	Crack opening.
w_k	Characteristic crack opening.
w_{max}	Maximum crack opening.
X	Coordinate. Neutral axis depth.

Y	Coordinate. Depth of rectangular stress diagram.
Z	Coordinate. Lever arm.

1.3 Greek lower case

Alpha	α	Angle. Non-dimensional coefficient.
Beta	β	Angle. Non-dimensional coefficient. Reliability index.
Gamma	γ	Weighting or safety factor. Specific gravity.
	γ_a	Partial safety factor for an accidental action.
	γ_m	Reduction factor for material strength.
	γ_c	Safety or reduction factor for concrete strength.
	γ_s	Safety or reduction factor for yield strength of steel.
	γ_f	Safety or weighting factor for actions.
	γ_g	Partial safety factor for a permanent action.
	γ^*_g	Partial safety factor for a permanent action with a non-constant value.
	γ_p	Partial safety factor for a prestressing action.
	γ_q	Partial safety factor for a variable action.
	γ_{fq}(ó γ_q)	Weighting factor for a variable load.
	γ_{fW}(ó γ_w)	Weighting factor for a wind load.
	γ_n	Complementary safety or weighting factor for actions.
	γ_r	Safety factor for cracking.
	γ_t	Safety factor for working life.
Delta	δ	Variation coefficient.
Epsilon	ε	Relative strain.
	ε_c	Relative strain of concrete.
	ε_{cc}	Relative creep strain.
	ε_{c0}	Average of the initial maximum compressive strain in the concrete.
	ε_{cp}	Strain in the concrete under the action of total prestressing.
	ε_{cs}	Relative shrinkage strain.
	ε_{cs0}	Basic shrinkage coefficient.
	$\varepsilon_{c\sigma}$	Tensile strain in the concrete.
	ε_{sm}	Mean elongation of reinforcements.
	ε_{cu}	Ultimate bending strain in the concrete.
	ε_{max}	Elongation under maximum load.
	ε_p	Strain in the active reinforcements.
	ε_{p0}	Strain in the adherent active reinforcement under the action of total prestressing.
	ε_{rf}	Final shrinkage value of the concrete after introducing prestressing.
	ε_s	Relative strain of steel.
	ε_{s1}	Relative strain of the more highly tensioned or less compressed reinforcement (ε_1).
	ε_{s2}	Relative strain of the more highly compressed or less tensioned reinforcement (ε_2).
	ε_u	Ultimate concentrated remaining elongation.
	ε_{u5}	Ultimate concentrated remaining elongation determined on the base of five times the diameter.
	ε_y	Elongation corresponding to the yield strength of steel.
Eta	η	Reduction factor for shear stress; area reduction coefficient.
Theta	θ	Angle.
Lambda	λ	Non-dimensional coefficient.
	λij	Coefficient of value.
Mu	μ	Reduced or relative bending moment. Coefficient of friction in curve.
Nu	ν	Reduced or relative normal stress.
Xi	ξ	Non-dimensional coefficient.
Rho	ρ	Steel ratio ρ = As/Ac. Presstresing steel relaxation.

	ρ_f	Final value of steel relaxation.
	ρ_e	Quantity of longitudinal reinforcement in the slab.
Sigma	σ	Normal stress.
	σ_c	Stress in the concrete.
	σ_{cd}	Design stress of the concrete.
	σ_{cgp}	Compressive stress at the centre of gravity of the active reinforcements.
	σ_{cp}	Tension in the concrete in the fiber corresponding to the center of gravity of the active armors due to the action of the prestressed one, the own weight and the dead load
	$\sigma c,_{RF}$	Maximum stress for the combination of fatigue.
	σp	Stress in the active reinforcements.
	σpi	Initial stress in the active reinforcements.
	$\sigma p,_{P0}$	Stress in the active reinforcement due to the characteristic prestressing value at the moment when the tie rod is checked.
	σ_s	Stress in the steel.
	σ_{sd}	Design stress of passive reinforcements.
	$\sigma_{sd,c}$	Design compressive strength of steel.
	σ_{sp}	Design stress of active reinforcements.
	σ_{s1}	Stress in the more highly tensioned or less compressed reinforcement ($\sigma 1$).
	σ_{s2}	Stress in the more highly compressed or less tensioned reinforcement ($\sigma 2$).
	σ_I	Main tensile stress.
	σ_{II}	Main compressive stress.
Tau	τ	Tangential stress.
	τ_b	Bond stress.
	τ_{bm}	Mean bond stress.
	τ_{bu}	Ultimate bond stress.
	$\tau_{c,RF}$	Maximum shear stress for the combination of fatigue.
	τ_{md}	Mean value of the shear stress.
	τ_{rd}	Design value of the shear strength of concrete.
	τ_{sd}	Nominal design tangential stress.
	τ_{td}	Design value of the tangential torsional stress.
	τ_{tu}	Ultimate value of the tangential torsional stress.
	τ_w	Tangential stress in the web.
	τ_{wd}	Design value of τ_w.
	τ_{wu}	Ultimate value of the tangential stress in the web.
Phi	φ	Non-dimensional coefficient.
	φ_t	Creep development coefficient over time *t*.
Psi	ψ	Non-dimensional coefficient.
	$\psi_{o,i\ Qki}$	Representative combination value of concomitant variable actions.
	$\psi_{1,1\ Qki}$	Representative frequent value of decisive variable actions.
	$\psi_{2,i\ Qki}$	Representative quasi-permanent values of variable actions with decisive action or with accidental action.
Omega	ω	Mechanical ratio: $\omega = A_s f_{yd} / A_c f_{cd}$.
	ω_w	Volumetric mechanical ratio of confinement.

1.4 Mathematical and special symbols

Σ	Sum.
Δ	Difference; increment.
$\varnothing$	Diameter of a bar.
$\ngtr$	No greater than.
$\nless$	No less than.
ΔP_i	Instantaneous losses of force.
ΔP_{dif}	Delayed losses of force.
$\Delta\sigma_{pd}$	Increase in stress due to external loads.
$\Delta\sigma_{pr}$	Loss due to relaxation at constant length.
ΔP_1	Losses of force due to friction.
ΔP_2	Losses of force due to wedge penetration.
ΔP_3	Losses of force due to elastic shortening of the concrete.
ΔP_{4f}	Final losses due to shrinkage of the concrete.
ΔP_{5f}	Final losses due to creep of the concrete.
ΔP_{6f}	Final losses due to relaxation of the steel.

2 Units and convention on signs

The units used in this Code correspond to those of the International System of Units (SI).

The convention on signs and notation used comply, in the main, with the general rules laid down for this purpose by the FIB (Fédération Internationale du Béton).

The system of units referred to in the articles is the International System of Units (SI) which may be legally used in Spain.

The practical units of the SI system are as follows:

for strengths and stresses:	$N/mm^2 = MN/m^2 = MPa$
for forces:	kN
for forces per unit length:	kN/m
for forces per unit area:	kN/m^2
for forces per unit volume:	kN/m^3
for moments:	kNm

The correspondence between the units of the International System of Units (SI) and the traditional Spanish system of units is as follows:

a) Newton - kilopond
1 N = 0.102 kp ≈ 0.1 kp
and inversely
1 kp = 9.8 N ≈ 10 N

b) Newton per square millimetre - kilopond per square centimetre
$1\ N/mm^2 = 10.2\ kp/cm^2 \approx 10\ kp/cm^2$
and inversely
$1\ kp/cm^2 = 0.098\ N/mm^2 \approx 0.1\ N/mm^2$

ANNEX 2

List of standards

The articles in this Code establish a series of conformity checks for the products and processes covered by its scope which, in many cases, refer to the UNE, UNE-EN or UNE-EN ISO standards.

The list of the corresponding standards applicable in each case is presented below, together with the dates of approval.

1. UNE Standards

UNE 7130:1958	Determination of the total content of soluble substances in mixing water for concrete.
UNE 7131:1958	Determination of the total sulphate content in mixing water for mortar and concrete.
UNE 7132:1958	Qualitative determination of carbohydrates in mixing water for mortar and concrete.
UNE 7133:1958	Determination of clay nodules in aggregates for producing mortar and concrete.
UNE 7134:1958	Determination of soft particles in coarse aggregates for concrete.
UNE 7178:1960	Determination of chlorides contained in the water used for producing mortar and concrete.
UNE 7234:1971	Determination of the acidity of water intended for mixing mortar and concrete, expressed by its pH.
UNE 7235:1971	Determination of the oils and greases contained in the mixing water for mortar and concrete.
UNE 7236:1971	Sampling for chemical analysis of water intended for mixing mortar and concrete.
UNE 7295:1976	Determination of the content, size typical maximum and grain sized unit of the coarse aggregates in the fresh concrete.
UNE 7244:1971	Determination of particles of low specific weight that can contain the aggregates used in concretes.
UNE 23093:1981	Test of the fire resistance of the structures and elements of construction.
UNE 23727:1990	Fire reaction tests for materials used in construction. Classification of materials used in construction
UNE 36065:2000-EX	Ribed weldable steel bars with special characteristics of ductibilidad for reinforced concrete reinforcement.
UNE 36067:1994	Ribed austenitic stainless steel wires for reinforced concrete armors.
UNE 36094:1997	Steel wires and strands for prestressed concrete reinfor-cements.

UNE 36831:1997	Passive steel reinforcement for structural concrete. Cutting, bending and positioning of bars and meshes. Tolerances. Preferred forms for reinforcement.
UNE 36832:1997	Specification for the execution of welded unions of bars for structural concrete.
UNE 41184:1990	Prestressing systems for post-tensioned reinforcements, definitions, characteristics and tests
UNE 53981:1998	Plastics. Expanded polystyrene (EPS) flooring blocks for one-way floor slabs with prefabricated joists.
UNE 67036:1999	Clay brick products. Moisture expansion test
UNE 67037:1999	Clay brick flooring blocks. Bending resistance test.
UNE 80303-2:2001	Cements with additional characteristics. Part 2: Resistant cements to the water of sea.
UNE 80305:2001	White cements.
UNE 80307:2001	Cements for special uses.
UNE 83115:1989 EX	Aggregates for concrete. Measurement of the friability coefficient of sand.
UNE 83414:1990 EX	Concrete additions. Fly ash. General recommendations for the addition of fly ash to concretes made with cement type I.
UNE 83361:2007	Self-compacting concrete. Description of fluidity. Runoff test.
UNE 83362:2007	Self-compacting concrete. Description of fluidity in the pre-sence of bars. Runoff test with Japanesse ring.
UNE 83363:2007	Self-compacting concrete. Description of fluidity in the presence of bars. L-box method.
UNE 83364:2007	Self-compacting concrete. Determination of flow time. V-funnel test.
UNE 83460-2:2005.	Concrete additions. Silica fume. Part 2. General recommendations for using silica fume.
UNE 83500-1:1989	Concretes with steel fibers and/or propylene. Classification and definitions. Steel fibers for concrete reinforcement.
UNE 83500-2:1989	Concretes with steel fibers and/or propylene. Classification and definitions. Fibers of propylene for the concrete reinforcement.
UNE 83503:2004	Concretes with fibers. Measurement of the workability by means of the inverted cone.
UNE 83510:2004	Concretes with fibers. Determination of the toughness index and resistance to first crack.
UNE 83512-1:2005	Concretes with fibers. Determination of the steel fiber content.
UNE 83512-2:2005	Concretes with fibers. Determination of the polypropylene fiber content.
UNE 83952:2008	Durability of the concrete. Mixing waters and aggressive waters. Determination of the pH. Potentiometric method.
UNE 83954:2008	Durability of the concrete. Aggressive waters. Determination of the ion ammonium.
UNE 83955:2008	Durability of the concrete. Aggressive waters. Determination of the ion magnesium.

UNE 83956:2008	Durability of the concrete. Mixing waters and aggressive waters. Determination of the ion sulphate.
UNE 83957:2008	Durability of the concrete. Mixing waters and aggressive waters. Determination of the dry remainder
UNE 83962:2008	Durability of the concrete. Aggressive grounds. Determination of the Baumann-Gully acidity degree.
UNE 83963:2008	Durability of the concrete. Aggressive grounds. Determination of the ion sulphate.
UNE 112010:1994	Corrosion in reinforcements. Determination of chlorides in hardened and placed concrete.
UNE 112011:1994	Corrosion in reinforcements. Determination of the carbonation depth in hardened and placed concrete.
UNE 146507-2:1999-EX	Aggregate tests. Determination of the potential reactivity of aggregates. Chemical method. Part 2. Determination of the alkali-carbonate reactivity
UNE 146508-2:1999-EX	Aggregate test. Determination of the potential alkali-silica and alkali-silicate reactivity of aggregates. Accelerated method using mortar test specimens.
UNE 146509-2:1999-EX	Determination of the potential reactivity of aggregates with alkalines. Concrete prisms method.
UNE 146901:2002	Designation of aggregates

2. UNE- EN Standards

UNE-EN 196-1:2005.	Methods of testing cement. Part 1. Determination of strength.
UNE-EN 196-2:2006.	Methods of testing cement. Part 2. Chemical analysis of cement
UNE-EN 196-3:2005.	Methods of testing cement. Part 3. Determination of setting time and soundness.
UNE-EN 197-1-2000.	Cement. Part 1. Composition, specifications and conformity criteria for common cements.
UNE-EN 197-1-2000/A1 :2005.	Cement. Part 1. Composition, specifications and conformity criteria for common cements.
UNE-EN 197-4:2005.	Cement. Part 4. Composition, specifications and conformity criteria for low early strength blastfurnace cements
UNE-EN 206-1:2000.	Concrete. Part 1:Specifications, performance, production and conformity.
UNE-EN 287-1:2004.	Qualification test of welders. Fusion welding. Part 1. Steels.
UNE-EN 445:1996.	Grout for prestressing tendons. Test methods.
UNE-EN 447:1996.	Grout for prestressing tendons. Specification for common grout
UNE-EN 450:1995.	Fly ash for concrete. Definitions, requirements and quality control.
UNE-EN 450:2006.	Fly ash for concrete. Part 1. Definitions, specifications and conformity criteria.
UNE-EN 451-1:2006.	Method of testing fly ash. Part 1. Determination of free calcium oxide content.

UNE-EN 451-2:1995.	Method of testing fly ash. Part 2. Determination of fineness by wet sieving.
UNE-EN 523:2005.	Steel strip sheaths for prestressing tendons. Terminology, requirements, quality control.
UNE-EN 524:1997.	Steel strip sheaths for prestressing tendons. Test methods.
UNE-EN 933-1:1998.	Tests for geometrical properties of aggregates.Part 1. Determination of particle size distribution. Sieving method
UNE-EN 933-2:1996.	Tests for geometrical properties of aggregates.Part 2. Determination of particle size distribution. Test sieves, nominal size of apertures
UNE-EN 933-3:1997.	Tests for geometrical properties of aggregates.Part 3. Determination of particle shape. Flakiness index.
UNE-EN 933-4:2000.	Tests for geometrical properties of aggregates.Part 4. Determination of particle shape.
UNE-EN 933-8:2000.	Tests for geometrical properties of aggregates. Part 8. Assessment of fines. Sand equivalent test.
UNE-EN 933-9:1999.	Tests for geometrical properties of aggregates. Part 9. Assessment of fines. Methylene blue test
UNE-EN 934-2:2002.	Admixtures for concrete, mortar and grout. Part 2. Concrete admixtures. Definitions, requirements, conformity, marking and labelling.
UNE-EN 934-2/A1:2005	Admixtures for concrete, mortar and grout. Part 2. Concrete admixtures. Definitions, requirements, conformity, marking and labelling.
UNE-EN 934-2/A2:2006	Admixtures for concrete, mortar and grout. Part 2. Concrete admixtures. Definitions, requirements, conformity, marking and labelling.
UNE-EN 934-6:2002.	Admixtures for concrete, mortar and grout. Part 6. Sampling, conformity control and evaluation of conformity.
UNE-EN 1015-11:2000.	Methods of test for mortar for masonry. Part 11. Determination of flexural and compressive strength of hardened mortar.
UNE-EN 1097-2:1999.	Tests for mechanical and physical properties of aggregates. Part 2. Methods for the determination of resistance to fragmentation.
UNE-EN 1097-6:2001.	Tests for mechanical and physical properties of aggregates. Part 6. Determination of particle density and water absorption.
UNE-EN 1363-1:2000.	Fire resistance tests. Part 1. General requirements.
UNE-EN 1363-2:2000.	Fire resistance tests. Part 2. Alternative and additional procedures.
UNE-EN 1367-2:1999.	Tests for thermal and weathering properties of aggregates. Magnesium sulfate test.
UNE-EN 1504-1:2005.	Products and systems for the protection and repair of concrete structures. Definitions, requirements, quality control and evaluation of conformity. Part 1. Definitions.

UNE-EN 1504-2:2005.	Products and systems for the protection and repair of concrete structures. Definitions, requirements, quality control and evaluation of conformity. Part 1. Systems of superficial protection of the concrete.
UNE-EN 1504-8:2005	Products and systems for the protection and repair of concrete structures. Definitions, requirements, quality control and evaluation of conformity. Part 8. Evaluation and quality control of the conformity.
UNE-EN 1504-10:2006	Products and systems for the protection and repair of concrete structures. Definitions, requirements, quality control and evaluation of conformity. Part 10. Application in situ of products and systems and quality control of the works.
UNE-EN 1520:2003.	Prefabricated reinforced components of lightweight aggregate concrete with open structure.
UNE-EN 1542:2000.	Products and systems for the protection and repair of concrete structures. Test methods. Measurement of bond strength by pull-off.
UNE-EN 1744-1:1999.	Tests for chemical properties of aggregates. Part 1. Chemical analysis.
UNE-EN 1770:1999.	Products and systems for the protection and repair of concrete structures. Test methods. Determination of the coefficient of thermal expansion.
UNE-EN 1990:2003.	Eurocode. Basis of structural design.
UNE-EN 1991-1-2:2004.	Eurocode 1. Actions on structures. Part 1-2. General actions. Actions on structures exposed to fire.
UNE-EN 10002-:2002.	Tensile testing of metallic materials. Part 1. Method of test at ambient temperature.
UNE-EN 10080:2006.	Steel for the reinforcement of concrete. Weldable reinforcing steel. General.
UNE-EN 12350-1:2006.	Testing fresh concrete. Part 1. Sampling.
UNE-EN 12350-2:2006.	Testing fresh concrete. Part 2. Slump test.
UNE-EN 12350-3:2006.	Testing fresh concrete. Part 3. Vebe test.
UNE-EN 12350-6:2006.	Testing fresh concrete. Part 6.Determination of density.
UNE-EN 12350-7:2001.	Testing fresh concrete. Part 7. Air content. Pressure methods.
UNE-EN 12390-1:2001.	Testing hardened concrete. Part 1. Shape, dimensions and other requirements for specimens and moulds.
UNE-EN 12390-2:2001.	Testing hardened concrete. Part 2. Making and curing specimens for strength tests.
UNE-EN 12390-3:2003.	Testing hardened concrete. Part 3. Compressive strength of test specimens.
UNE-EN 12390-5:2001.	Testing hardened concrete. Part 5. Flexural strength of test specimens.
UNE-EN 12390-6:2001	Testing hardened concrete. Part 6. Tensile splitting strength of test specimens.

UNE-EN 12390-8:2001.	Testing hardened concrete. Part 8. Depth of penetration of water under pressure.
UNE-EN 12504-1:2001.	Testing concrete in structures. Part 1. Cored specimens. Taking, examining and testing in compression.
UNE-EN 12504-2:2002.	Testing concrete in structures. Part 2. Non-destructive testing. Determination of rebound number.
UNE-EN 12504-4:2006.	Testing concrete in structures. Part 4. Determination of ultrasonic pulse velocity.
UNE-EN 12620:2003.	Aggregates for concrete.
UNE-EN 12620/AC:2004.	Aggregates for concrete.
UNE-EN 12696:2001.	Cathodic protection of the steel in the concrete.
UNE-EN 12794:2006.	Precast concrete products. Foundation piles.
UNE-EN 13055-1:2003.	Aggregates light. Part 1: Aggregates for concrete, mortar and injected
UNE-EN13224:2005	Precast concrete products. Ribbed floor elements.
UNE-EN13225:2005	Precast concrete products. Linear structural elements.
UNE-EN 13263-1:2006	Silica fume for concrete. Part 1. Definitions, requirements and conformity criteria
UNE-ENV 13381-3:2004.	Test methods for determining the contribution to the fire resistance of structural members. Part 3. Applied protection to concrete members.
UNE-EN13501:2002	Classification based on the behavior againt fire of construction products and elements for the construction. Part 1: Classification from data collected in tests of reaction to the fire.
UNE-EN13577:2008	Chemical attack to the concrete.Determination of the content of aggressive carbon dioxide in the water.
UNE-EN13693:2005	Precast concrete products. Special roof elements.
UNE-EN 14216:2005.	Cement. Composition, specifications and conformity criteria for very low heat special cements.
UNE-EN 14647:2006.	Calcium aluminate cement. Composition, specifications and conformity criteria.
UNE-EN14651:2007	Test method for metallic fibred concrete. Measuring the flexural tensile strength (limit of proportionality (LOP), residual)
UNE-EN 14721:2007	Test method for metallic fibred concrete.Determination of the content of fibres in fresh and hardened concrete.
UNE-EN 45011:1998	General requirements for bodies operating product certification systems)

3. UNE-EN ISO Standards

UNE-EN ISO 377:1998.	Steel and steel products. Location and preparation of samples and test pieces for mechanical testing. (ISO 377:1997).
UNE-EN ISO 9001:2000.	Quality management systems. Requirements. (ISO 9001:2000)
UNE-EN ISO 14001:2004	Environmental management systems. Requirements with guidance for use. (ISO 14001:2004).
UNE-EN ISO 15614-1:2005.	Specification and qualification of welding procedures for metallic materials. Welding procedure test.Part 1: Welding by arc and with gas and welding by arc of nickel and its alloys. (ISO 15614-1: 2004)
UNE-EN ISO 15630-1:2003.	Steel for the reinforcement and prestressing of concrete. Test methods. Part 1. Reinforcing bars, wire rod and wire for reinforced concrete. (ISO 15630-1:2002)
UNE-EN ISO 15630-2:2003.	Steel for the reinforcement and prestressing of concrete. Test methods. Part 2. Welded fabric. (ISO 15630-2:2002)
UNE-EN ISO 15630-3:2003.	Steel for the reinforcement and prestressing of concrete. Test methods. Part 3. Prestressing steel.(ISO 15630-3:2002)

4. UNE-EN ISO/IEC Standards

UNE-EN ISO/IEC 17021:2006.	Conformity assessment.requeriments for the auditory and certification of management systems bodies. (ISO/IEC17021: 2006)
UNE-EN ISO/IEC 17025:2005.	Conformity assessment. General requirements for the competence of testing and calibration laboratories.

ANNEX 3

Requirements for using calcium aluminate cement

1 Characteristics of calcium aluminate cement

Whereas Portland cements essentially get their hydraulic properties from the calcium silicates and tricalcium aluminate, calcium aluminate cement gets these properties from the monocalcium aluminate. The Al_2O_3 content of the latter, according to UNE EN 14647, must be between 36 and 55%, although its usual values are between 40 and 42%.

Calcium aluminate cement offers a series of special characteristics. Thus, while its setting time is virtually identical to that of Portland cement, it hardens much more quickly. As a result, mortar and concrete made with calcium aluminate cement reaches strength, after only a few hours, which is about the same as that obtained at 28 days with Portland cement.

This strength reduces over time due to a conversion process in which the hydration of the calcium aluminate cement at ambient temperature (<25°C) produces hexagonal hydrated calcium aluminates which are metastable. These therefore inevitably undergo a transformation (conversion) to the cubic form of hydrated calcium aluminate which is the only thermodynamically stable compound.

This conversion causes the porosity of concrete made with calcium aluminate cement to increase and therefore reduces its strength. This conversion can take just a few minutes or several years as the transformation rate depends on several factors, principally temperature.

The degree of this reduction in strength can vary. If the recommendations for correct use are followed and if a high cement dosage and a low water/cement ratio are used, the concrete can remain strong enough. However, the strength can reduce to excessively low values if the aforementioned recommendations are not followed.

The final strength reached after the conversion can be determined using the test described in UNE EN 14647.

Calcium aluminate cement in particular withstands better than Portland cement the action of pure water, sea water, sulphated water and gypsum-bearing soil and also the action of magnesium salts and diluted acids. However, concrete made with this is less resistant to the action of alkaline hydroxides.

In order to correctly use calcium aluminate cement in its various applications, the general rules which are valid for producing Portland cement mortar and concrete should be borne in mind. The specific instructions indicated below should also be followed.

2 Materials

Calcium aluminate cement shall meet the requirements laid down in the applicable specific regulations in order to be used in those cases indicated in section 8 – Applications of this Annex.

The aggregates shall comply with the general specifications given in this Code.

Aggregates containing releasable free alkalis must not be used and, in particular, the use of granite, shale, micaceous and feldspathic aggregates must be avoided.

Fine aggregates with a sand equivalent higher than 85%, according to UNE-EN 933-8, or those containing less than 5% by weight of particles smaller than 0,125 mm must be used.

The behaviour of admixtures with calcium aluminate cement is significantly different from that observed with Portland cement. Prior tests are therefore compulsory to establish the compatibility and appropriate dosage of each type of admixture.

3 Design

The characteristic strength of concrete made with calcium aluminate cement shall be taken as the minimum residual strength which may be reached after the cement has fully converted, bearing in mind the considerations set out in section 1. Its value shall be determined using the experimental procedure described in section A.7 of Informative Annex A UNE-EN 14647 In any event, the characteristic strength shall never exceed 40 N/mm².

Due to the lower pH and reduced alkaline reserve, reinforcements embedded in concrete made with calcium aluminate cement may be more exposed to corrosion. As a result and for reasons of general durability, the minimum covers which must be used are:

- In the non-aggressive exposure class (I): 20 mm.
- In the normal exposure class (II): 30 or 40 mm depending on the reinforcement diameter and stresses in the element.
- In the marine (III), non-marine chlorides (IV) and aggressive chemical (Q) exposure classes: 40 mm.

The minimum cover shall be increased along the cover edge Δr indicated in Article 37.2.4 of this Code in order to achieve the nominal cover defined in this Article.

4 Batching

The following requirements shall be strictly observed:

- The minimum cement content shall be 400 kg/m^3.
- Water/cement ratios higher than 0,4 shall not be used. When calculating the mixing water, the water provided by the aggregates shall be taken into account.

5 Work equipment and tools

Any possible contact between the calcium aluminate cement and other Portland clinker-based cements or lime or gypsum shall be avoided, as also shall any accidental contamination of the calcium aluminate cement by these elements.

6 Placing of the concrete

Vibration shall be used when the concrete is placed.

When concreting in hot weather, the aggregates and water must not be directly exposed to sunlight.

When concreting in cold weather, the following precautions shall be taken:

- Frozen aggregates shall not be used.
- The temperature of the recently mixed concrete shall be sufficient to ensure that this remains above 0°C until setting and, as a result, the exothermal cement hydration reactions have begun.

7 Curing

In the case of pavements or slabs, initial curing of the concrete must be carried out immediately using curing products or the concrete must be protected with damp cloths. In the case of other structures or elements with a smaller surface area, once setting has ended, curing

shall begin using continuous spraying or watering. This shall continue for at least the first 24 hours after the concrete is placed.

As with Portland cement, it is advisable to avoid premature drying of the cast concrete elements, particularly in hot and dry environments. A good practical recommendation is to keep the concrete elements covered and it is advisable to water them periodically during the first few days.

Unless a special study is carried out, heat curing must not be used.

8 Applications

In accordance with Article 26, the use of calcium aluminate cement in concrete must be specially studied in each case, setting out the reasons for its use and strictly observing the specifications contained in this Annex.

Calcium aluminate cement is best for:

- Refractory concrete.
- Urgent and rapid repairs.
- Temporary footings and beds.

Where its use is justifiable, it may be used in:

- Structures and elements precast using plain concrete or non-structural reinforced concrete.
- Certain cases of plain concrete foundations.
- Sprayed concrete.

Calcium aluminate cement is not recommended for:

- Structural reinforced concrete.
- Large volumes of plain or reinforced concrete.
- Cement-treated substrates for roads.
- Soil stabilisation.

Calcium aluminate cement is prohibited for:

- Prestressed concrete in all cases, according to Article 26 of this Code.

With regard to the exposure classes, concrete produced in accordance with the specifications of this Annex will behave appropriately in:

- Non-aggressive environments	I
- Marine environments	III
- Slightly aggressive chemical environments	Qa
- Moderately aggressive chemical environments	Qb

ANNEX 4

Recommendations for selecting the type of cement to be used in structural concrete

1. Introduction

The current Guidelines on the acceptance of cement generally regulate the conditions which cement must meet in order to be used. This recommendations Annex is only included in order to facilitate the selection, by the Designer or Technical Management, of the type of cement to be used in each case.

The type of cement must be selected bearing in mind at least the following criteria:

a) application of the concrete, in accordance with section 2 of this Annex;
b) concreting circumstances, in accordance with section 4 of this Annex;
c) environmental aggression conditions to which the concrete element will be subject, in accordance with section 5 of this Annex.

2. Selecting the type of cement according to the concrete application

The recommended cements according to their application are indicated in Table A.4.2.

TABLE A.4.2
Types of cement according to the concrete application

APPLICATION	RECOMMENDED CEMENTS
Plain concrete	All common cements, except for types CEM II/A-Q, CEM II/B-Q, CEM II/A-W, CEM II/B-W, CEM II/A-T, CEM II/B-T and CEM III/C. Cements for special uses ESP VI-1 (*).
Reinforced concrete	All common cements except for types CEM II/A-Q, CEM II/B-Q, CEM II/A-W, CEM II/B-W, CEM II/A-T, CEM II/B-T, CEM III/C and CEM V/B.
Prestressed concrete including structural precast concrete	Common cements (**) of types CEM I, CEM II/A-D, CEM II/A-V, CEM II/A-P and CEM II/A-M (V-P) (***).
Reinforced concrete precast structural elements	Common cements (**) of types CEM I, CEM II/A, are highly recommended and common cement of type CEM IV/A, is recommended when this is determined by a specific experimental study.
Large volumes of plain or reinforced concrete	Common cements of types CEM III/B and CEM IV/B are highly recommended and common cements of types CEM II/B, CEM III/A, CEM IV/A and CEM V/A are recommended. Cements for special uses ESP VI-1 (*). The additional characteristic of low heat (LH) and very low heat (VLH) is highly recommended where applicable.
High-strength concrete	Common cements of type CEM I are highly recommended and common cements of types CEM II/A-D and CEM II/A 42,5 R are recommended. The other common cements of type CEM II/A may be recommended when this is determined by a specific experimental study.
Concrete for urgent and rapid repairs	Common cements of types CEM I, CEM II/A-D and calcium aluminate cement (CAC).
Concrete for rapid formwork removal and stripping	Common cements (**) of types CEM I and CEM II.
Sprayed concrete	Common cements of types CEM I and CEM II/A.
Concrete with potentially reactive aggregates (****)	Common cements of types CEM III, CEM IV, CEM V, CEM II/A-D, CEM II/B-S and CEM II/B-V are highly recommended and common cements of types CEM II/B-P and CEM II/B-M are recommended.

(*) In the case of large volumes of plain concrete.
(**) Among the cements indicated, those with a high initial strength are preferable.
(***) The inclusion of cements CEM II/A-V, CEM II/A-P and CEM II/A-M (V-P) as being appropriate for the prestressed concrete application is coherent with the possibility, contemplated in the EHE, of using fly ash in a quantity not exceeding 20% of the cement weight in the prestressed concrete.
(****) For this application, cements with a low alkaline content or those cited in the table are recommended.

3. Selecting the type of cement according to specific structural applications

3.1 Cements recommended for foundations

Table A.4.3.1 indicates the cements recommended for use in the production of concrete intended for foundations.

TABLE A.4.3.1

APPLICATION	RECOMMENDED CEMENTS
Plain concrete foundations	Common cements of type CEM IV/B are highly recommended and the other common cements are recommended, except for CEM II/A-Q, CEM II/B-Q, CEM II/A-W, CEM II/B-W, CEM II/A-T and CEM II/B-T. In all cases the additional characteristic of low heat (LH) is recommended. The requirements for using the additional characteristic of sulphate resistance (SR) or sea water resistance (MR) must be met where applicable.
Reinforced concrete foundations	Common cements of types CEM I and CEM II/A are highly recommended and the other common cements are recommended, except for CEM III/B, CEM IV/B, CEM II/A-Q, CEM II/B-Q, CEM II/A-W, CEM II/B-W, CEM II/A-T and CEM II/B-T. The requirements for using the additional characteristic of sulphate resistance (SR) or sea water resistance (MR) must be met where applicable.

3.2 Cements recommended for port and maritime works

Table A.4.3.2 indicates the cements recommended for use in the production of concrete intended for the construction of plain, reinforced or prestressed concrete structures forming part of port and maritime works.

TABLE A.4.3.2

APPLICATION	TYPE OF CONCRETE	RECOMMENDED CEMENTS
Port and maritime works	Plain	Common cements, except for types CEM III/C, CEM II/A-Q, CEM II/B-Q, CEM II/A-W, CEM II/B-W, CEM II/A-T and CEM II/B-T.
	Reinforced	Common cements, except for types CEM II/A-Q, CEM II/B-Q, CEM II/A-W, CEM II/B-W, CEM II/A-T, CEM II/B-T, CEM III/C and CEM V/B.
	Prestressed	Common cements (*) of types CEM I, CEM II/A-D, CEM II/A-P, CEM II/A-V and CEM II/A-M (V-P).

(*) Among the cements indicated, those with a high initial strength are preferable.

The use of any particular type of cement, with the MR additional characteristic where necessary, shall depend on the concrete requirements, provided that there are no special circumstances advising against its use.

3.3 Cements recommended for dams

Table A.4.3.3 indicates the cements recommended for use in the production of concrete intended for the construction of dams.

TABLE A.4.3.3

APPLICATION	RECOMMENDED CEMENTS
Vibrated concrete dams	Common cements of types CEM II/A, CEM III/A, CEM III/B and CEM IV/A.
Compacted concrete dams	Common cements of types CEM III, CEM IV and CEM V; Cements for special uses ESP VI-1; Very low heat special cements of types VLH III, VLH IV and VLH V, and. Blastfurnace cements with a low initial strength L.

Type CEM I cements may also be used where an addition compatible with the design requirements is added in sufficient quantity to the concrete.

It is recommended that the cements used are in a low strength class (32,5) and also that the heat of hydration is particularly taken into account. As a result, the use of cements with the additional characteristic of low heat or very low heat is generally advisable.

3.4 Cements recommended for hydraulic works other than dams

Table A.4.3.4 indicates the cements recommended for use in the production of concrete intended for the construction of water transport structures which do not form part of the main body of dams.

TABLE A.4.3.4

APPLICATION	TYPE OF CONCRETE	RECOMMENDED CEMENTS
Concrete pipes, channels and other hydraulic applications	Plain	Common cements, except for types CEM II/A-Q, CEM II/B-Q, CEM II/A-W, CEM II/B-W, CEM II/A-T, CEM II/B-T and CEM III/C.
	Reinforced	Common cements, except for types CEM II/A-Q, CEM II/B-Q, CEM II/A-W, CEM II/B-W, CEM II/A-T, CEM II/B-T, CEM III/C and CEM V/B.
	Prestressed	Common cements of types CEM I, CEM II/A-D, CEM II/A-V, CEM II/A-P and CEM II/A-M (V-P).

4. Selecting the type of cement according to the concreting circumstances

The cements recommended according to the placing conditions are indicated in Table A.4.4.

TABLE A.4.4

Types of cement according to the concreting circumstances

CONCRETING CIRCUMSTANCES	RECOMMENDED CEMENTS
Concreting in cold weather (*) (**)	Common cements of types CEM I, CEM II/A and CEM IV/A.
Concreting in dry and windy environments and, in general, in conditions which accelerate the drying of the concrete (**)	Common cements of types CEM I and CEM II/A.
Strong sunlight and concreting in hot weather (**)	Common cements of types CEM II, CEM III/A, CEM IV/A and CEM V/A.

(*) In these circumstances, the additional characteristic of low heat (LH) should not be used.
(**) In these circumstances, the appropriate measures specified in the corresponding regulations and, where applicable, in the Guidelines on Structural Concrete (EHE) must be taken during the execution or placing process.

5. Selecting the type of cement according to the exposure class

The cements recommended according to the exposure class of the environment in which the structural element will be located are indicated in Table A.4.5.

TABLE A.4.5

Types of cement according to the exposure class

EXPOSURE CLASS	TYPE OF PROCESS (aggression due to)	RECOMMENDED CEMENTS
I	None	All those recommended according to the application.
II	Corrosion of reinforcements other than as a result of chlorides	CEM I, any CEM II (preferably CEM II/A), CEM III/A and CEM IV/A.
III (*)	Corrosion of reinforcements by marine chlorides	Cements of types CEM II/S, CEM II/V (preferably CEM II/B-V), CEM II/P (preferably CEM II/B-P), CEM II/A-D, CEM III, CEM IV (preferably CEM IV/A) and CEM V/A are highly recommended.
IV	Corrosion of reinforcements by non-marine chlorides	Preferably CEM I and CEM II/A and also the same ones as for exposure class III.
Q (**)	Concrete attacked by sulphates	The same ones as for exposure class III.
Q	Leaching of concrete due to pure or acid water or water containing aggressive CO^2	Common cements of types CEM II/P, CEM II/V, CEM II/A-D, CEM II/S, CEM III, CEM IV and CEM V.
Q	Alkali-aggregate reactivity	Cements with a low alkaline content (***)(sodium and potassium oxides) in which $(Na_2O)eq = Na_2O (\%) + 0'658\ K_2O (\%) < 0'60$.

(*) In this exposure class, the requirements for using the additional characteristic of sea water resistance (MR) must be met as established by the Guidelines on Structural Concrete (EHE).
(**) In this exposure class, the requirements for using the additional characteristic of sulphate resistance (SR), where the specific class is Qb or Qc, must be met as established in this Code. In cases where the element is in contact with sea water, the requirements for using the additional characteristic of sea water resistance (MR) must be met.
(***) The cements cited in Table A4.2 for concretes containing potentially reactive aggregates (which would require cements with a low alkaline content) are also recommended.

ANNEX 5

Test method to determine the stability of grouting

1 Definition and applications

This test method is intended to determine the exudation and variation in volume (expansion or contraction) of the mix (grout or mortar) used as an injection product in ducts in which prestressing reinforcements are to be placed.

2 Equipment used

A cylindrical glass vessel measuring 10 cm high by 10 cm in diameter will be used. A mark will be made on this to indicate the filling height, a_1 (see Figure A.5.1).

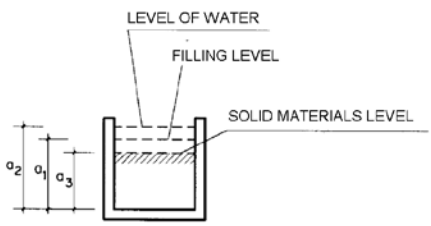

Figure A.5.1

3 Operating procedure

The required amount of the grout mix will be poured into the test vessel until this is level with the mark made on the vessel, a_1. Once filled to the required level, the vessel will be sealed to prevent evaporation and will be left for the time required to allow the settling of the mix to stabilise. The water level, a_2, and the level of solid materials, a_3, will then be measured.

These measurements must also be made at an intermediate stage to determine the possible exudation of the mix 3 hours after its preparation, as laid down in Article 35.4.

4 Obtention and accuracy of the results

The values of the exudation, *EX*, and the variation in volume, ΔV, will be calculated using the following expressions:

$$EX = \frac{a_2 - a_3}{a_1} 100$$

$$\Delta V = \frac{a_3 - a_1}{a_1} 100$$

The results obtained will be expressed as a percentage of the initial volume of the mix.

As regards the variation in volume, if $\Delta V<0$, this means that contraction has occurred. On the other hand, if $\Delta V>0$, this means that expansion has occurred.

ANNEX 6

Recommendations for additional fire protection of structural elements

1 Scope

This Annex contains a series of recommendations applicable to structural concrete structures which, for general fire safety reasons, must meet the following conditions when exposed to fire:

- Prevent the premature collapse of the structure (loadbearing function).
- Limit the spread of the fire (flames, hot gases, excessive heat) outside specific areas (separating function).

This Annex sets out simplified methods and tables allowing the resistance of structural concrete elements to the action represented by the standard time-temperature curve, according to UNE EN 1363-1, to be safely determined. These methods must be regarded as sufficient for establishing the fire resistance of structural concrete elements but not as essential for establishing this as other more precise or advanced methods may always be used, including experimental methods, to determine the fire resistance of these elements, as laid down in section 4 of this Annex.

Other fire models may be used to represent the development of temperature during the fire, such as those known as parametric curves or, for local purposes, those fire models for one or two zones or for localised fires, or methods based on fluid dynamics such as those considered in standard UNE-EN 1991-1-2.

Both shell structures and those with external prestressing, as covered by this Code, must be checked using specific methods. In particular, the simplified methods and the checking methods involving tables included in this Annex will not be applicable. Likewise, for concrete with a characteristic strength in excess of 80 N/mm², reference must be made to the specialised bibliography.

In shell structures which fundamentally work by form, the main problem is the effect of deformations caused by heat. This aspect is not covered by the simplified methods proposed which only take account of the sectional problems deriving from the action of the fire.

2 Definitions

The fire resistance of a structure or part thereof is defined as its capacity to maintain, over a given period of time, the required loadbearing function and also the integrity and/or thermal insulation under the terms specified in the corresponding standard test (RD No 312/2005).

The standard fire resistance of a structure or part thereof (usually only isolated elements) is therefore defined as its resistance to a standard fire given by the time-temperature curve in UNE EN 1363-1. The maximum exposure time until the loss of capacity to fulfil the required functions becomes imminent is known as the standard fire resistance period and is expressed in minutes as specified in a scale laid down in UNE-EN 13501-2.

The nominal standard fire resistance time periods used in this Annex are those included in UNE-EN 13501-2: 30, 60, 90, 120, 180 y 240 minutes

There are three criteria for classifying fire behaviour:

- Loadbearing capacity of the structure (R criterion)
- Barrier to the passage of flames and hot gases (E criterion)

- Thermal insulation in the event of fire (I criterion)

3 Design bases

3.1 Combinations of actions

To determine the stresses due to the action of the fire and other concomitant actions, the combination corresponding to an accidental situation, as expressed in Article 13 of this Code, will be used.

When the simplified 500°C isotherm method is used, as set out in section 7, the stresses determined for the worst combination of actions at ambient temperature, reduced by an overall factor η_{fi}, may be used, in a simplified manner, as the stresses for checking the accidental fire situation.

$$E_{fi,d,t} = \eta_{fi} E_d$$

where:

$E_{fi,d,t}$ Value of the design stresses to be taken into account when checking the accidental fire situation.

E_d Value of the design stresses to be taken into account when checking permanent or temporary situations at ambient temperature.

η_{fi} Reduction factor which can be determined using the following expression:

$$\eta_{fi} = \frac{G_K + \psi_{1,1} Q_{K,1}}{\gamma_G G_K + \gamma_{Q,1} Q_{K,1}}$$

The following may be used to simplify matters:

$\eta_{fi} = 0.6$ for normal cases.
$\eta_{fi} = 0.7$ for storage zones.

3.2 Partial safety factors for materials

The partial safety factors for materials are regarded as equal to one: γ_c=1.0 and γ_s=1.0.

4 Checking methods

As a general rule, several different fire checking methods may be used with different levels of accuracy and, as a result, complexity.

The general method involves checking the various Ultimate Limit States bearing in mind, both when determining the design stresses and when analysing the structural response, the influence of the fire action in view of the fundamental physical behaviour.

The structural analysis model must adequately represent the temperature-related properties of the material, including stiffness, temperature distribution in the various elements of the structure and the effect of thermal expansions and deformations (indirect actions due to the fire).

Furthermore, the structural response must take account of the characteristics of the materials at the different temperatures which may be produced in one cross-section or structural element.

Any failure mode not explicitly taken into account in the stress analysis or structural response (for example, insufficient rotational capacity, expalling of the cover, local buckling of the compressed reinforcement, bond and shear stress failures, damage to the anchoring devices) must be avoided by using appropriate construction details.

Simplified checking methods may be used provided that these lead to equivalent or safe results with regard to those which might be obtained using the general methods.

As a general rule, the simplified methods involve checking the various Ultimate Limit States by considering isolated structural elements (ignoring the indirect actions due to the fire – expansions, deformations, etc.), pre-established temperature distributions, generally for box sections, and, as variations in the material properties due to the temperature effect, simplified and simple models. Section 7 of this Annex includes the simplified isotherm 500°C method.

Using the checking method involving tables, which is set out in section 5 of this Annex, involves checking the dimensions of the cross-sections and mechanical covers using simplified and safe assumptions. For some situations, other additional checks may be required and, in these cases, more specific data can be obtained from the corresponding product standard.

In all cases, it is also valid to assess the behaviour of a structure, part thereof or a structural element by carrying out the tests set out in Royal Decree N 312/2005 of 18 March.

5 Checking method involving tables

5.1 General

Using the following tables and sections, the resistance of structural elements to the action represented by the standard time-temperature curve for structural elements can be determined according to their dimensions and the equivalent minimum distance to the axis of the reinforcements.

In order to apply the tables, the equivalent distance to the axis, a_m, for the purposes of fire resistance, is defined as follows:

$$a_m = \frac{\sum \left[A_{si} f_{yki} \left(a_{si} + \Delta a_{si} \right) \right]}{\sum A_{si} f_{yki}}$$

where:

A_{si} area of each passive or active reinforcement i;

a_{si} distance from the axis of each reinforcement i to the closest exposed face, taking into account the covers under the conditions laid down below;

f_{yki} characteristic strength of the steel in the reinforcements i;

Δa_{si} correction due to the different critical temperatures of the steel and due to the particular fire exposure conditions, in accordance with the values in Table A.6.5.1.

TABLE A.6.5.1

Values of Δa_{si} (mm)

μ_{fi}	Reinforcing steel		Prestressing steel			
	Beams[(1)] and slabs (floor slabs)	Other cases	Beams[(1)] and slabs (floor slabs)		Other cases	
			Bars	Wire rods	Bars	Wire rods
≤ 0,4	+5		-5	-10		
0,5	0	0	-10	-15	-10	-15
0,6	-5		-15	-20		

(1) In the case of reinforcements placed at the corners of beams with a single layer of reinforcement, the values of Δa_{si} will be decreased by 10 mm when the width of these is less than the values of b_{min} specified in column 3 of Table A.6.5.5.2.

where μ_{fi} is the overdimensioning factor of the section under study, defined as:

$$\mu_{fi} = \frac{E_{fi,d,t}}{R_{fi,d,0}}$$

where:

$R_{fi,d,0}$ resistance of the structural element in a fire situation in the initial instant t=0, at normal temperature.

Corrections for values of μ_{fi} less than 0,5 in beams, slabs and floor slabs may only be taken into account where these elements are subject to loads distributed relatively uniformly.

Intermediate values may be determined by linear interpolation.

To simplify matters, for situations with a normal control level, the value of μ_{fi} may be taken as 0,5 in general and 0,6 in storage zones.

The values given in the tables apply to normal density concretes with a characteristic strength of $f_{ck} \leq 50$ N/mm^2, produced using siliceous aggregates.

When concretes containing limestone aggregates are used, the following reductions may be permitted:

- For beams and slabs, 10% in both the minimum dimensions of the straight section and in the equivalent minimum distance to the axis of the reinforcements (a_{min}).
- For non-loadbearing walls (partitions), 10% of the minimum thickness.
- For loadbearing walls and pillars, no reduction shall be permitted.

When concretes with a characteristic strength of 50 N/mm^2 < $f_{ck} \leq 80$ N/mm^2 and an active silica content less than 6% by weight of the cement content are used, the minimum section dimensions established in the tables must be increased by:

- For components exposed to the fire on one face only: $0{,}1 \cdot a_{min}$, for concretes with a characteristic strength of 50 N/mm^2 < $f_{ck} \leq 60$ N/mm^2 and $0{,}3 \cdot a_{min}$ for concretes with a characteristic strength of 60 N/mm^2 < $f_{ck} \leq 80$ N/mm^2;

- For other components: double the values defined for the above case.

Where a_{min} is the equivalent minimum distance to the axis specified in the corresponding tables.

In tension zones with concrete covers in excess of 50 mm, a skin reinforcement must be used to prevent the concrete spalling during the fire resistance period. This skin reinforcement consists of a mesh with distances of less than 150 mm between reinforcements (in both directions), regularly anchored in the concrete mass.

5.2 Supports

Using Table A.6.5.2, the fire resistance of circular and rectangular supports exposed on three or four faces can be determined with reference to the equivalent minimum distance to the axis of the reinforcements in the exposed faces.

TABLE A.6.5.2
Supports

Fire resistance	Minimum dimension b_{min} / Equivalent minimum distance to the axis a_{min} (mm)(*)
R 30	150(**)/15
R 60	200(**)/20
R 90	250/30
R 120	250/40
R 180	350/45
R 240	400/50

(*) Higher values may be required for the covers due to durability requirements.
(**) The minimum dimension shall comply with the provisions of Article 54.

For fire resistances higher than R 90 and where the reinforcement of the support is more than 2% of the concrete section, this reinforcement shall be distributed across all its faces. This condition does not apply to reinforcement overlap areas.

5.3 Walls

5.3.1 Non-loadbearing walls

It is recommended that non-loadbearing solid walls, enclosing walls or partitions have a geometric slenderness ratio between the wall height and its thickness of less than 40 and that they comply with the minimum dimensions indicated in Table A.6.5.3.1.

TABLE A.6.5.3.1

Fire resistance	Minimum thickness of wall (mm)
EI 30	60
EI 60	80
EI 90	100
EI 120	120
EI 180	150
EI 240	175

5.3.2 Loadbearing walls

Using Table A.6.5.3.2, the fire resistance of loadbearing solid walls exposed on one or both faces can be determined with reference to the equivalent minimum distance to the axis of the reinforcements in the exposed faces.

TABLE A.6.5.3.2

Fire resistance	Minimum dimension b_{min} / Equivalent minimum distance to the axis a_{min} (mm)(*)	
	Wall exposed on one face	Wall exposed on both faces
REI 30	100/15	120/15
REI 60	120/15	140/15
REI 90	140/20	160/25
REI 120	160/25	180/35
REI 180	200/40	250/45
REI 240	250/50	300/50

(*) Higher values may be required for the covers due to durability requirements.

5.4 Tie rods. Elements subject to tension

The minimum dimension of a tie rod and the equivalent minimum distance to the axis of the reinforcements shall not be less than those recommended for any of the combinations indicated in Table A.6.5.4.

In all cases, the concrete cross-sectional area must be greater than or equal to $2b^2_{min}$ where b_{min} is the minimum dimension indicated in Table A.6.5.4.

TABLE A.6.5.4

Fire resistance	Minimum dimension b_{min} / Equivalent minimum distance to the axis a_{min} (mm)(*)
R 30	80/25
R 60	120/40
R 90	150/55
R 120	200/65
R 180	240/80
R 240	280/90

(*) Higher values may be required for the covers due to durability requirements.

Where the structure supported by the tie rod is vulnerable to elongation due to the effect of heat caused by the fire, the covers defined in Table A.6.5.4 shall be increased by 10 mm.

5.5 Beams

5.5.1 General

For variable-width beams, the minimum width b shall be regarded as that at the height of the mechanical centre of gravity of the reinforcement tensioned in the exposed zone, as indicated in Figure A.6.5.5.1.

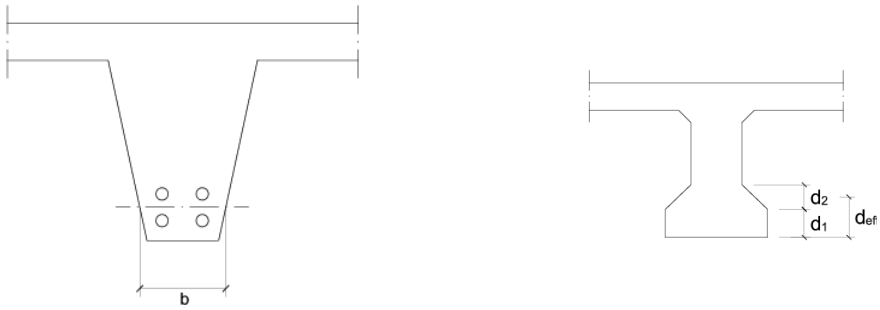

Figure A.6.5.5.1
Equivalent dimensions in the event of a variable width in the depth

For double-T beams, the depth of the lower flange shall be greater than the dimension established as the minimum width. Where the depth of the lower flange is variable, this shall be taken, for the purposes of this check, as that indicated in the figure where $d_{ef} = d_1+0.5d_2$.

5.5.2 Beams with three faces exposed to the fire

Using Table A.6.5.5.2, the fire resistance of sections of beams supported at the ends with three faces exposed to the fire can be determined with reference to the minimum width of the section and the equivalent minimum distance to the axis of the tensioned lower reinforcement.

TABLE A.6.5.5.2

Fire resistance	Minimum dimension b_{min} / Equivalent minimum distance to the axis a_{min} (mm)(*)				Minimum width of the web $b_{0,min}$ mm(**)
	Option 1	Option 2	Option 3	Option 4	
R 30	80/20	120/15	200/10	-	80
R 60	100/30	150/25	200/20	-	100
R 90	150/40	200/35	250/30	400/25	100
R 120	200/50	250/45	300/40	500/35	120
R 180	300/75	350/65	400/60	600/50	140
R 240	400/75	500/70	700/60	-	160

(*) The covers will normally be higher due to durability requirements (see Table 37.2.4).
(**) Must be given in a length equal to twice the depth of the beam, on each side of the elements supporting the beam.

For standard fire resistance of R 90 or higher, it is recommended that the negative reinforcement of continuous beams extends up to 33% of the span length with a quantity not less than 25% of that required on supports.

5.5.3 Beams exposed on all faces

In this case, in addition to checking the conditions in Table A.6.5.5.2, it must be confirmed that the cross-sectional area of the beam is not less than $2(b_{min})^2$.

5.6 Solid slabs

Using Table A.6.5.6, the fire resistance of sections of solid slabs can be determined with reference to the equivalent minimum distance to the axis of the tensioned lower reinforcement. If the slab must fulfil a fire compartmentalisation function (R, E and I criteria), its thickness must be at least that established in the table. However, when only a loadbearing function (R criterion) is required, the thickness need only be that required to meet the design requirements at ambient temperature. For these purposes, the flooring or any other element maintaining its insulating function throughout the fire resistance period may be regarded as the thickness.

TABLE A.6.5.6

Fire resistance	Minimum thickness h_{min}	Equivalent minimum distance to the axis a_{min} (mm) (*)		
		Bending in one direction	Bending in two directions	
			l_y/l_x (**) $\leq 1,5$	$1,5 < l_y/l_x$ (**) ≤ 22
REI 30	60	10*	10*	10*
REI 60	80	20	10*	20
REI 90	100	25	15	25
REI 120	120	35	20	30
REI 180	150	50	30	40
REI 240	175	60	50	50

(*) Higher values may be required for the covers due to durability requirements.

(**) l_x and l_y are the slab spans, where $l_y > l_x$.

For solid slabs on linear supports and in cases of fire resistance of R 90 or higher, the negative reinforcement must extend along 33% of the section length with a quantity not less than 25% of that required on supported ends.

For solid slabs on point supports and in cases of fire resistance of R 90 or higher, 20% of the upper reinforcement on supports must extend along the whole section. This reinforcement must be placed on the support strip.

Flat slabs with side packing of more than 10 cm may be likened to one-way slabs.

5.7 Two-way floor slabs

Using Table A.6.5.7, the fire resistance of sections of two-way ribbed slabs can be determined with reference to the minimum rib width and the equivalent minimum distance to the axis of the tensioned lower reinforcement. If the floor slab must fulfil a fire compartmentalisation function (R, E and I criteria), its thickness must be at least that established in the table. However, when only a loadbearing function (R criterion) is required, the thickness need only be that required to meet the design requirements at ambient temperature. For these purposes, the flooring or any other element maintaining its insulating function throughout the fire resistance period may be regarded as the thickness.

TABLE A.6.5.7

Fire resistance	Minimum rib width b_{min} / Equivalent minimum distance to the axis a_m (mm)(*)			Minimum thickness h_s of the top slab
	Option 1	Option 2	Option 3	
R 30	80/20	120/15	200/10	60
R 60	100/30	150/25	200/20	70
R 90	120/40	200/30	250/25	80
R 120	160/50	250/40	300/25	100
R 180	200/70	300/60	400/55	120
R 240	250/90	350/75	500/70	150

(*) Higher values may be required for the covers due to durability requirements.

If floor slabs have brick or concrete infill blocks and a lower cover, for fire resistance of R 120 or lower, it will only be necessary to comply with the value of the equivalent minimum distance to the axis of the reinforcements established for solid slabs in Table A.6.5.6.For the purposes of this distance, the equivalent concrete thicknesses may be taken into account in accordance with the criteria and conditions indicated in section 6.

For ribbed slabs on point supports and in cases of fire resistance of R 90 or higher, 20% of the upper reinforcement on supports shall be distributed along the whole length of the span, in the support strip. If the ribbed slab is placed on linear supports, the negative reinforcement shall extend along 33% of the span length with a quantity not less than 25% of that required on supports.

5.8 One-way floor slabs

If floor slabs have brick or concrete infill blocks and a lower cover, for fire resistance of R 120 or lower, it will only be necessary to comply with the value of the equivalent minimum distance to the axis of the reinforcements established for solid slabs in Table A.6.5.6. For the purposes of this distance, the equivalent concrete thicknesses may be taken into account in accordance with the criteria and conditions indicated in section 6. If the floor slab has a fire compartmentalisation function, it must also comply with the thickness h_{min} established in Table A.6.5.6.

For a fire resistance of R 90 or higher, the negative reinforcement of continuous slabs must extend up to 33% of the section length with a quantity not less than 25% of that required at the ends.

For fire resistances higher than R 120 or where the infill blocks are not brick or concrete or a lower cover has not been provided, the specifications established for beams with three faces exposed to the fire in section 5.5.2 must be met. For the purposes of the thickness of the concrete top slab and the rib width, the thicknesses of the flooring and the infill blocks which maintain its insulating function during the fire resistance period may be taken into account. This period may be assumed to be 120 minutes in the absence of experimental data. Brick flooring blocks may be regarded as additional concrete thicknesses equivalent to twice the actual thickness of the flooring block.

6. Protective layers

The required fire resistance may be achieved by applying protective layers whose contribution to the fire resistance of the protected structural element shall be determined in accordance with standard UNE ENV 13381-3.

Plaster covers may be regarded as additional concrete thicknesses equivalent to 1.8 times their actual thickness. When these are applied to ceilings, for values less R 120, it is recommended that these are sprayed. However, for fire resistance values higher than R 120, their contribution can only be checked by testing.

7 Simplified isotherm 500°C method

7.1 Scope

This method applies to reinforced and prestressed concrete elements with a characteristic strength of $f_{ck} \leq 50$ N/mm^2, stressed by compressive, flexural or flexural-compressive stresses. For concrete with a characteristic strength in excess of 50 N/mm², additional provisions must be taken into account in accordance with the specialised bibliography.

In order to apply this method, the dimension of the smaller side of the beams or supports exposed on this side and those adjacent must be greater than that indicated in Table A.6.7.1.

TABLE A.6.7.1 Minimum dimension of beams and supports

Standard fire resistance	R 60	R 90	R 120	R 180	R 240
Minimum dimension of the straight section (mm)	90	120	160	180	200

7.2 Determination of the design loadbearing capacity of the cross-section

The loadbearing capacity of a reinforced concrete section is checked using the methods established in this Code, taking into account:

a) a reduced concrete section determined by eliminating, for calculation purposes in order to determine the loadbearing capacity of the cross-section, the zones which have reached a temperature higher than 500°C during the period of time in question;
b) that the mechanical characteristics of the concrete in the reduced section are not affected by the temperature but retain their initial values in terms of strength and modulus of elasticity;
c) that the mechanical characteristics of the reinforcements are reduced in accordance with the temperature reached at their centre during the fire resistance period in question. All reinforcements will be taken into account, including those placed outside the reduced concrete cross-section.

The section-by-section checking of beams or slabs produces safe results. A more refined procedure is to check that, in a fire situation, the residual capacity, at moments of each sign, of the set of sections is equal to the load.

7.3 Reduction in the mechanical characteristics

The strength of materials must be reduced, according to the temperature reached at each point, by the fraction of the characteristic value indicated in Table A.6.7.3:

TABLE A.6.7.3

Relative reduction of the strength of the steel according to the temperatura

Temperature (ºC)		100	200	300	400	500	600	700	800	900	1000	1200
Reinforcing steel	Hot-rolled	1,00	1,00	1,00	1,00	0,78	0,47	0,23	0,11	0,06	0,04	0,00
	Cold-drawn	1,00	1,00	1,00	0,94	0,67	0,40	0,12	0,11	0,08	0,05	0,00
Prestressing steel	Cold-drawn	0,99	0,87	0,72	0,46	0,22	0,10	0,08	0,05	0,03	0,00	0,00

7.4 Isotherms

The temperatures in a concrete structure exposed to fire can be obtained by experiment or analysis.

The isotherms shown in the figures in this section can be used to determine the temperatures in the straight section of concretes containing siliceous aggregates and exposed to fire according to the standard curve up to the instant of maximum temperature. These isotherms produce safe results for most types of aggregate but cannot generally be used for exposure to fire other than standard fire.

Figure A.6.7.4.a
Isotherms for rooms with a section of 300 x 160 mm exposed on both faces

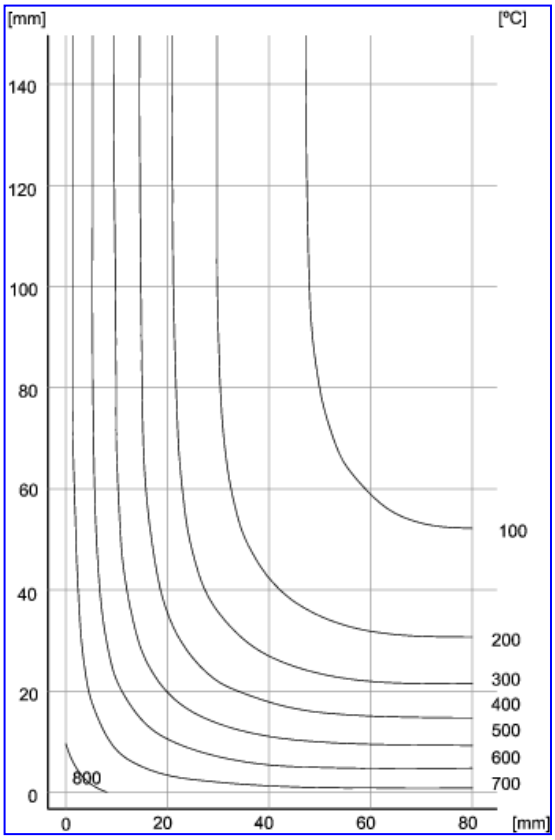

R-30

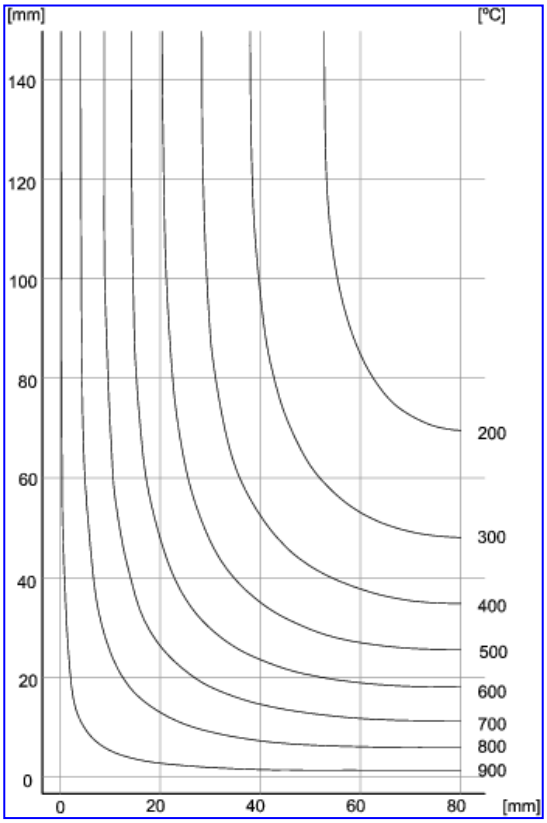

R-60

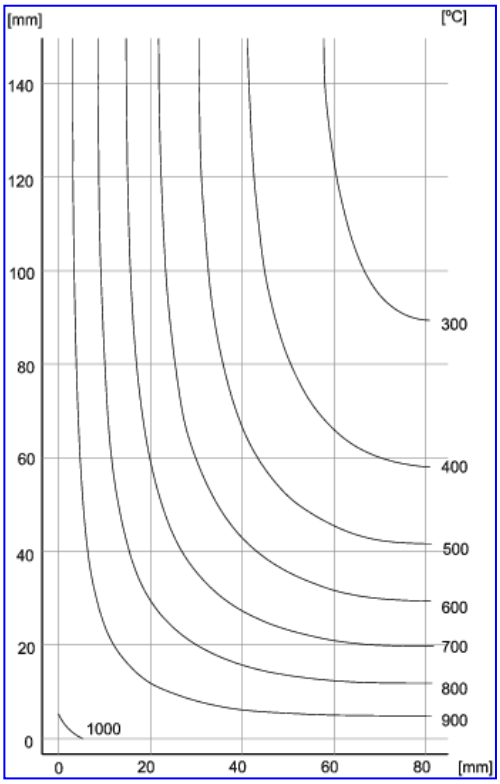

R-90

Figure A.6.7.4.b

Isotherms for rooms with a section of 600 x 300 mm exposed on both faces

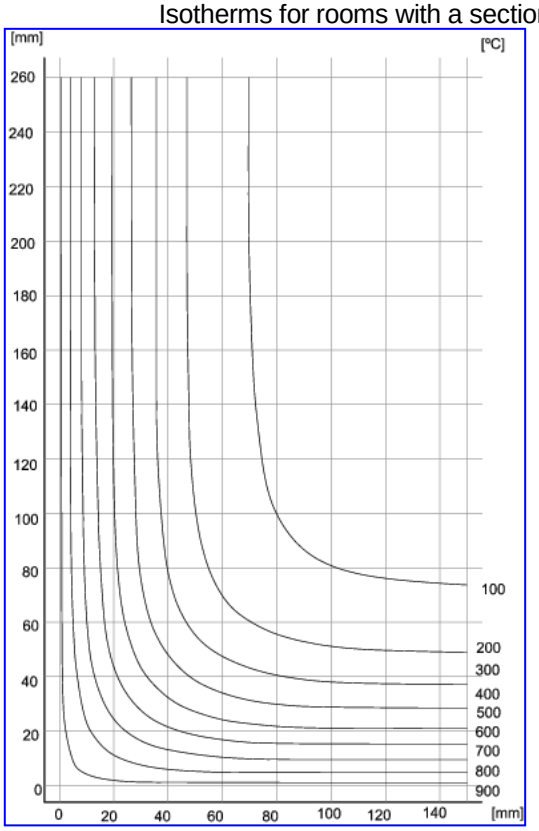

R-60

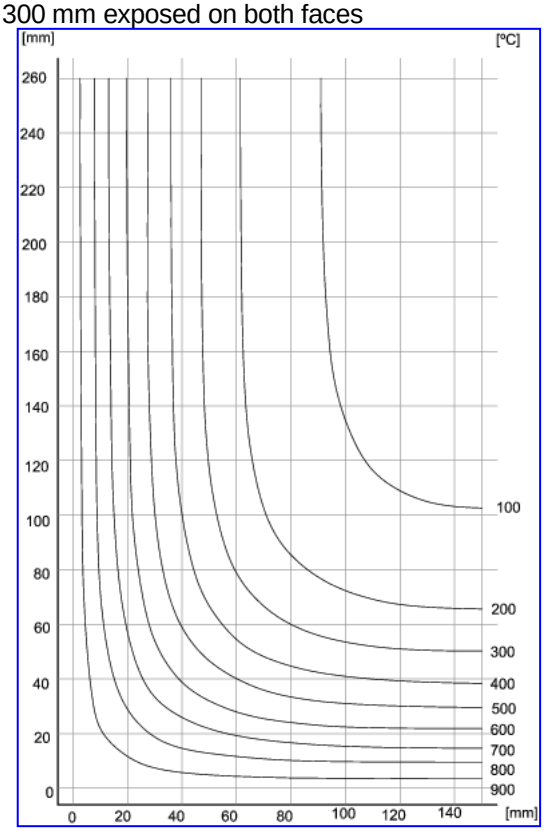

R-90

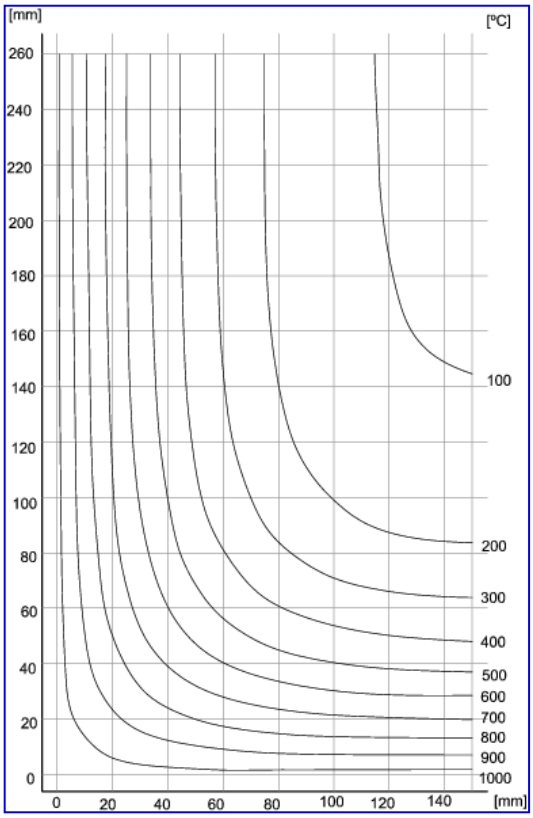

R-120

Figure A.6.7.4.c
Isotherms for rooms with a section of 800 x 500 mm exposed on both faces

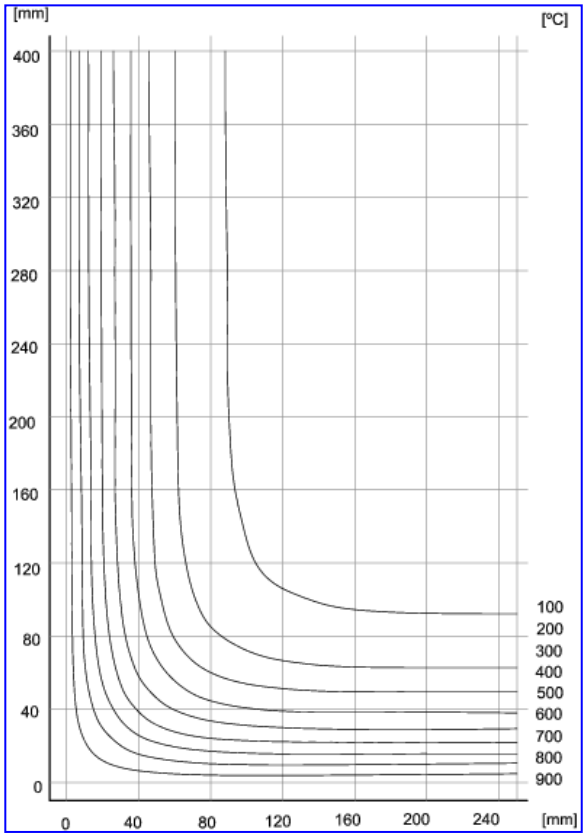

R-90

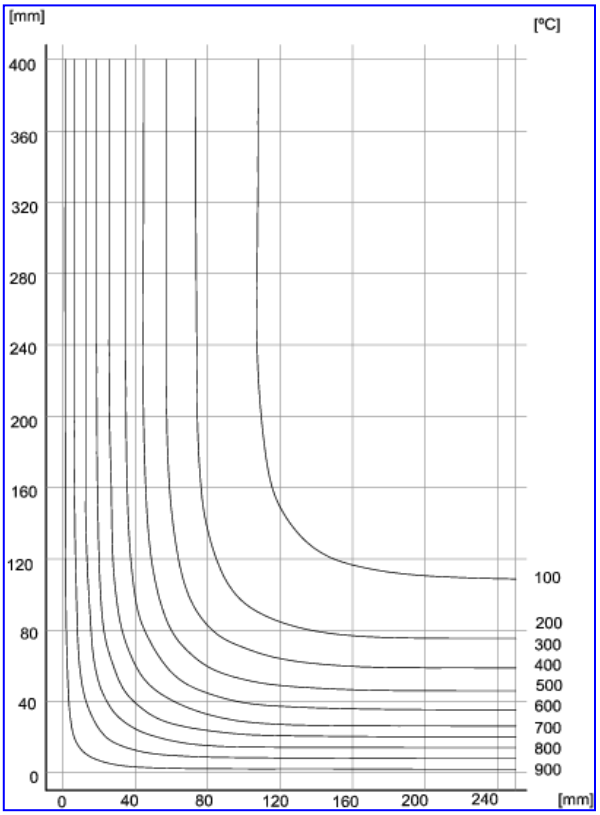

R-120

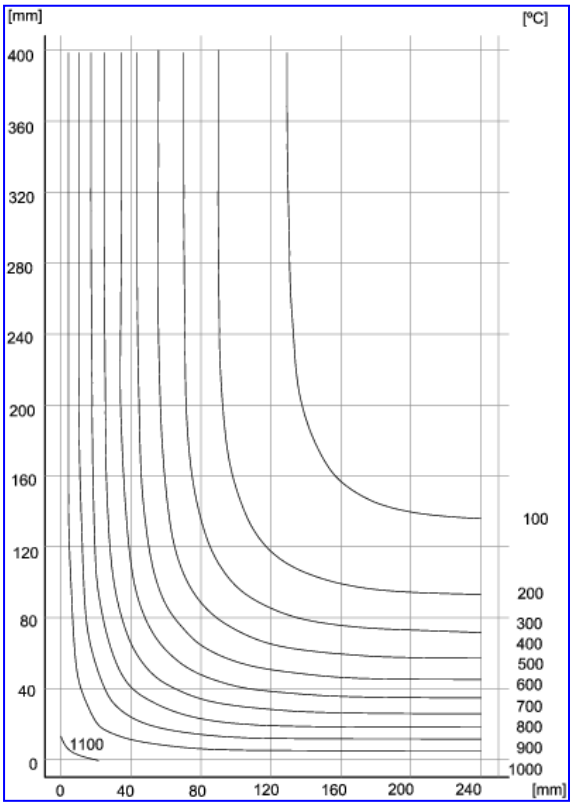

R-180

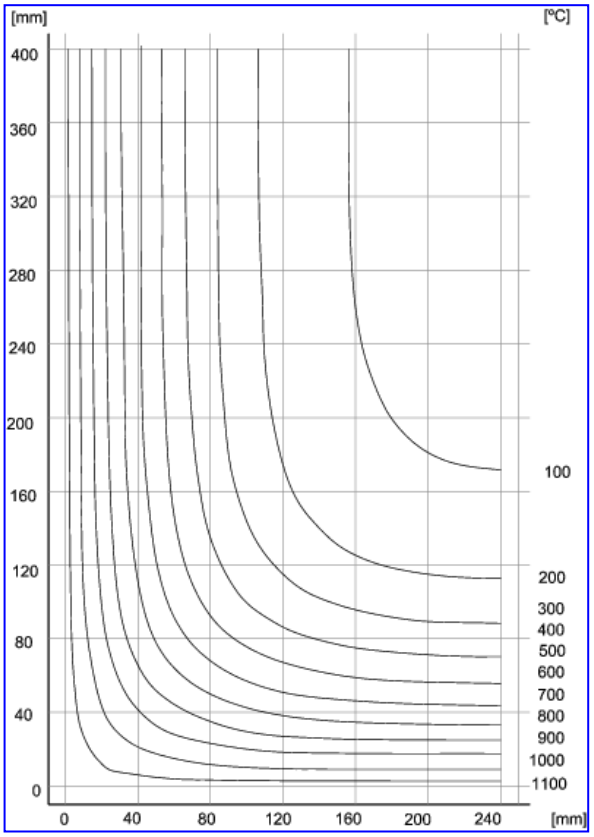

R-240

Figure A.6.7.4.d

Isotherms for rooms with a section of 300 x 300 mm exposed on both faces

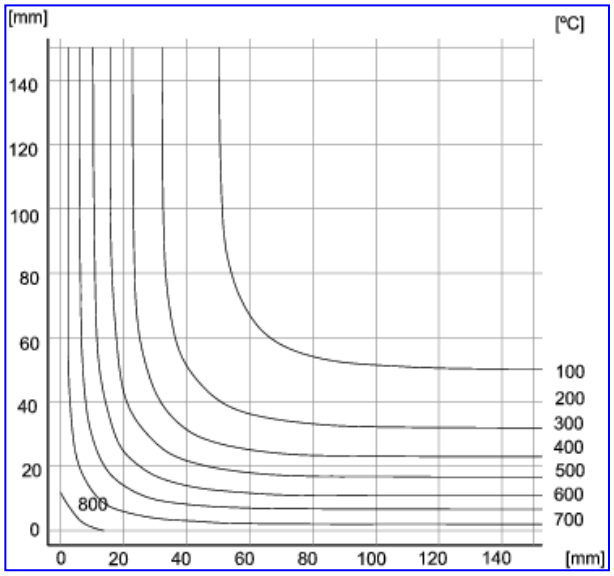

R-30

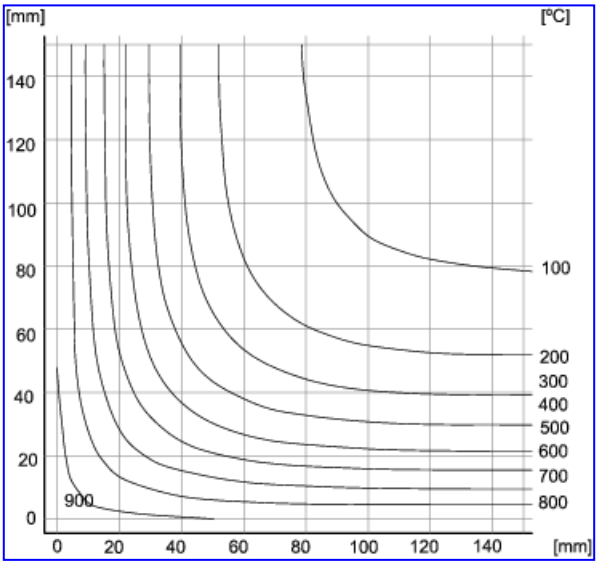

R-60

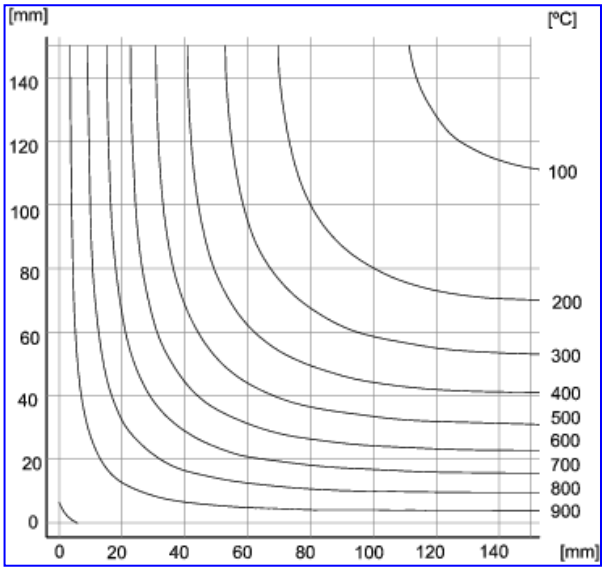

R-90

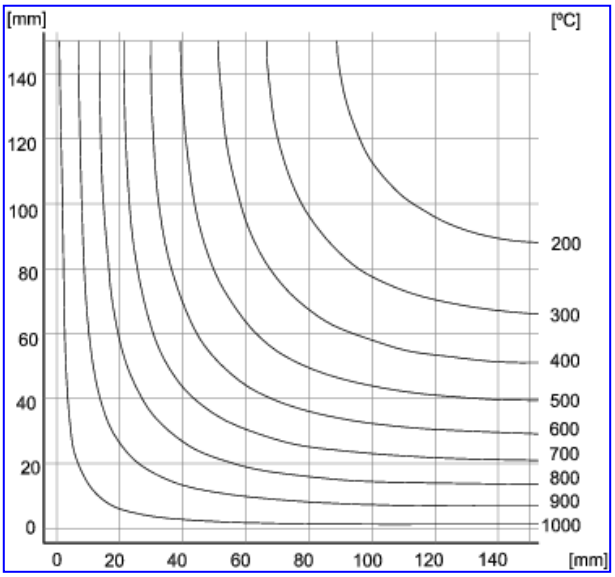

R-120

Figure A.6.7.4.e

Isotherms for a room with a circular section 300 mm in diameter exposed around the perimeter

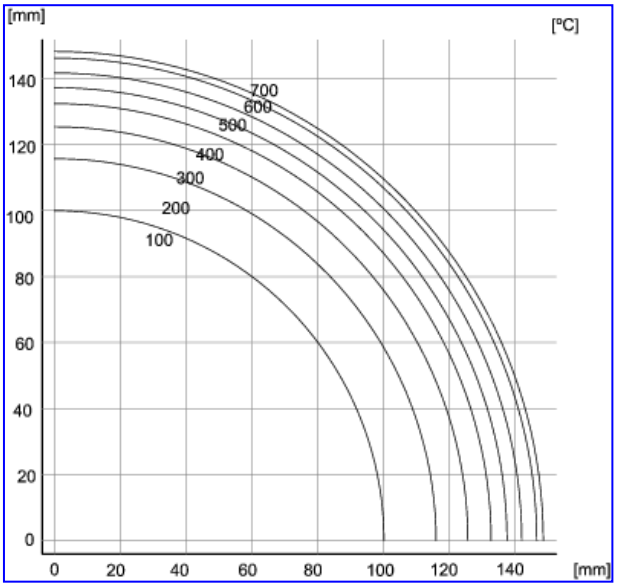

R-30

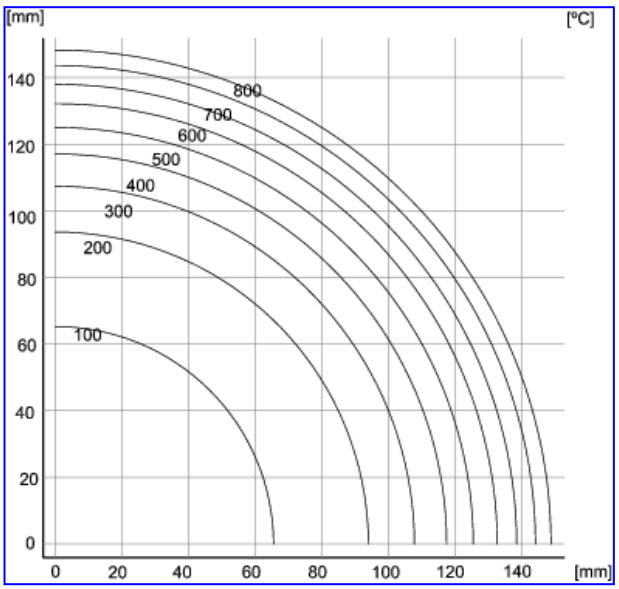

R-60

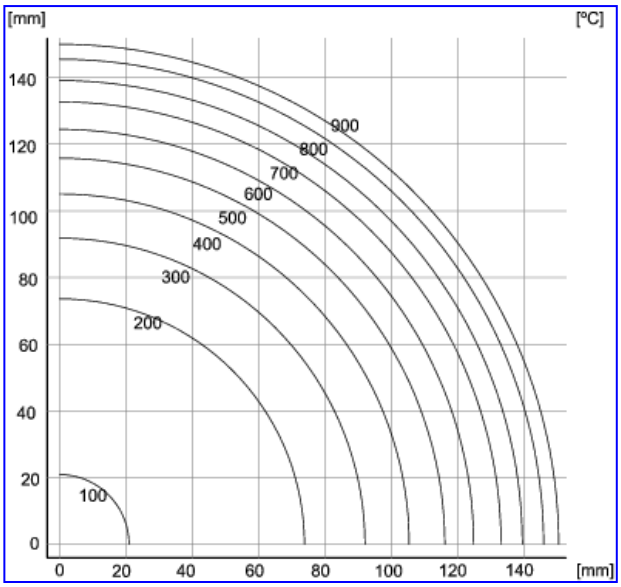

R-90

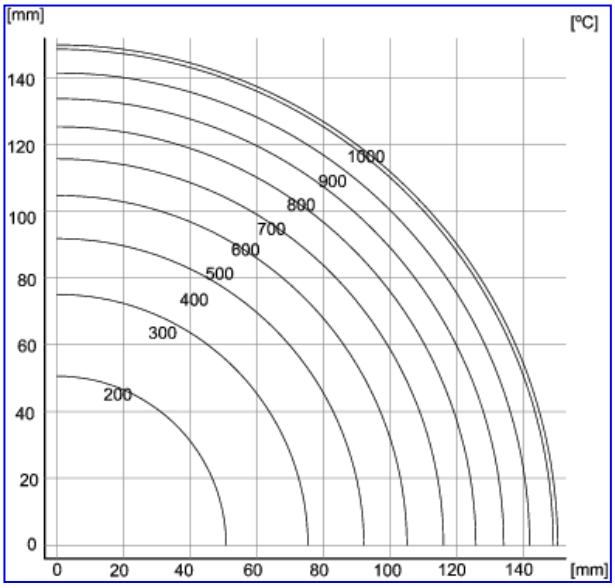

R-120

Figure A.6.7.4.f

Temperature distribution in the thickness of flat sections exposed on one face h ≥ 200 mm

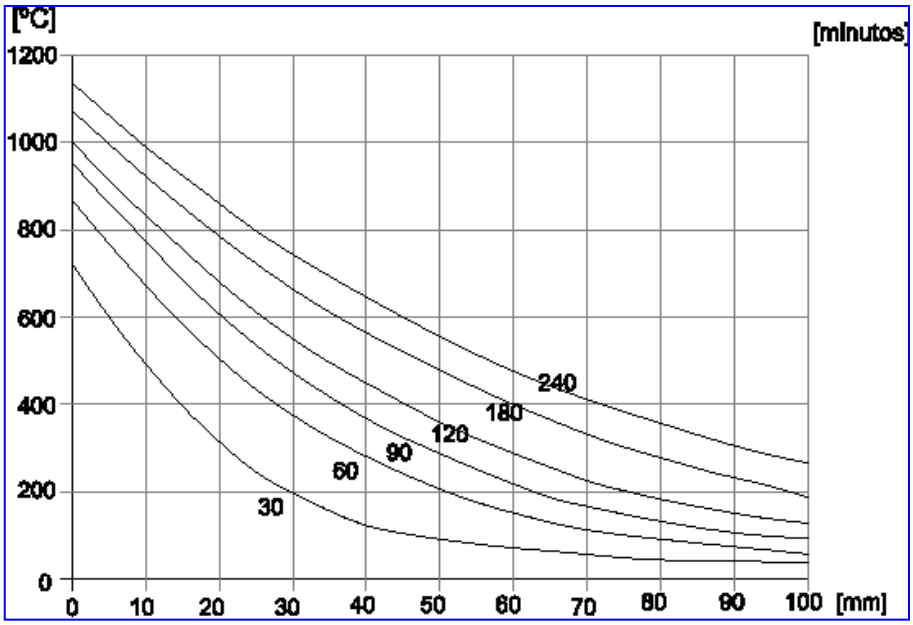

R-30 - R240

ANNEX 7

Simplified calculation of sections in the Failure Limit State under normal stresses.

1. Scope

This Annex contains simplified formulae for calculating (dimensioning or checking) box or T-sections subject to simple or straight combined bending (see Figure A.7.1). It also contains a simplified method for reducing the simple or combinedd biaxial bending of sections to straight compound bending . The expressions in this Annex are valid solely for sections made of concrete with a strength of $f_{ck} \leq 50$ N/mm^2.

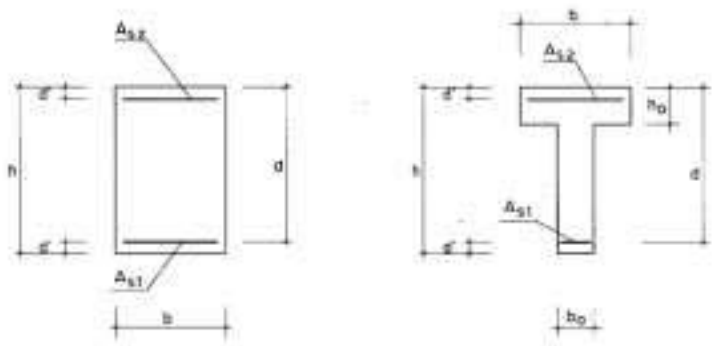

Figure A.7.1

2. Basic assumptions and limitations

The formulas presented in the following paragraphs have been determined using the basic assumptions set out in Article 42.1.2 by adopting a bilinear diagram for passive reinforcement steel and a parabolic-rectangular diagram for compressed concrete (approximated, for the calculation of stress and moment resultants, to a rectangular diagram, as set out in Article 39.5).

The failure strain domains, which identify the Failure Ultimate Limit State under normal stresses, in accordance with the criteria set out in Article 42.1.3, have also been taken into account.

The formulas indicated are valid for the various types of steel permitted in this Code for passive reinforcements, provided that these comply with:

$$\frac{d'}{d} \leq 0{,}20$$

$$\frac{d}{h} \geq 0{,}80$$

The meaning of certain variables used in the formulas in the following paragraphs is defined as follows.

$$f_{cd} = \alpha_{cc} \frac{f_{ck}}{\gamma_c}$$

$$U_0 = f_{cd}\, b\, d$$

$$U_v = 2 U_0 \frac{d'}{d}$$

$$U_a = U_0 \frac{h}{d} = f_{cd}\, b\, h$$

The equilibrium equations constitute a non-linear system due to the non-linear behaviour of materials and the existence of three pivots for defining the failure domains.

Figure A.7.2 shows, according to the position of the neutral fibre *x*, the evolution of stress in the reinforcement layers A_{s1} and A_{s2} and the evolution of the axial force and moment of the resultant of the compressed concrete about the fibres in which A_{s1} and A_{s2} are located. The definition of the moment of the resultant of the compressed block uses a reference fibre at depth *y*.

The figure and the formulas in this Annex have been determined by considering that the deformation of the yield strength of steel is ε_y = 0,002. This constitutes a reasonable simplification and an intermediate value between those corresponding to the available steels and the reduction factor of steel defined in Article 15.3.

In addition, and in order to simplify the expressions obtained, the figure of 0,0033 instead of 0,0035 has been taken as the deformation of pivot 2, i.e. the maximum deformation of compressed concrete. This assumption does not significantly affect the results obtained.

The analytical expression of the stress in the steel in layer A_{s2}, in its evolution between -f_{yd} and f_{yd}, has been linearised. This simplification leads to the definition of *-0,5 d'* and *2,5 d'* delimiters which are approximate and which also produce sufficiently accurate results.

Given these simplifications, the expressions of the various variables in Figure A.7.2 are:

- For $s_1(x) = \sigma_{s1}(x)/f_{yd}$ this gives:

-1	$-\infty < x \leq x_l = 0{,}625d$
$\frac{5}{3}\frac{x-d}{x}$	$0{,}625d < x \leq h$
$\frac{x-d}{x-0{,}4h}$	$h < x$

- For $s_2(x) = \sigma_{s2}(x)/f_{yd}$ this gives:

-1	$-\infty < x \leq -0{,}5d'$
$\frac{2}{3}\frac{x-d'}{d'}$	$-0{,}5d' < x \leq 2{,}5d'$
1	$2{,}5d' < x$

For a rectangular section, where $N_c(x)$ is the resultant of the compressed block, this gives:

$$N_c\,(x) = U_a\,\lambda(x)\,\eta(x)$$

and, where $M_c(x,y)$ is the benting moment of the compressed concrete block about a generic fibre situated at depth y, this gives:

$$M_c\,(x,y) = N_c\,(x)\left[y - \lambda(x)\frac{h}{2}\right]$$

where:

$$\eta(x) = 1{,}0 \qquad 0 < x < \infty$$

$$\lambda(x) = \begin{cases} 0{,}8\dfrac{x}{h} & 0 < x \le h \\ 1{,}0 - 0{,}2\dfrac{h}{x} & h < x \le \infty \end{cases}$$

The force and moment equilibrium equations, according to the above expressions, may be written as follows (see Figure A.7.3):

$$N_c\,(x) + U_{s1}\frac{\sigma_{s1}(x)}{f_{yd}} + U_{s2}\frac{\sigma_{s2}(x)}{f_{yd}} = N$$

$$M_c\,(x,d) + U_{s2}\frac{\sigma_{s2}(x)}{f_{yd}}(d - d') = N\,e_1$$

$$M_c\,(x,d') - U_{s1}\frac{\sigma_{s1}(x)}{f_{yd}}(d - d') = N\,e_2$$

In these expressions, the values of e_1 and e_2 are obtained as follows:

$$e_1 = e_0 - 0{,}5\,h + d$$
$$e_2 = e_0 - 0{,}5\,h + d'$$

For dimensioning, $N = N_d$ and x, U_{s1} and U_{s2} are unknown. For checking, $N = N_u$, U_{s1} and U_{s2} are data, and x and N_u are unknown.

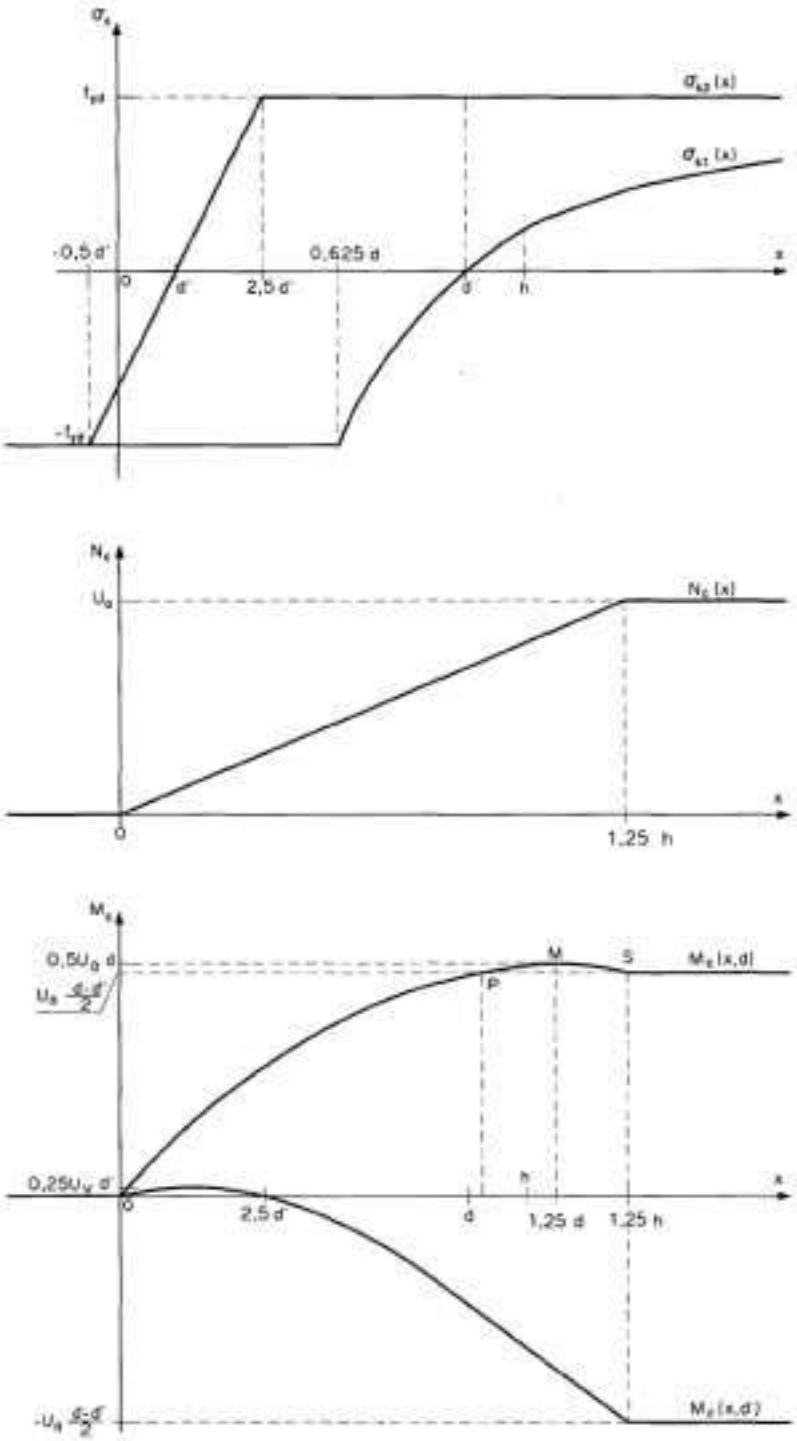
σ_x
f_yd
σ_k2 (x)
σ_k1 (x)
-0,5 d'
0,625 d
x
0
d'
2,5 d'
d
h
-f_yd
N_x
U_o
N_c (x)
x
0
1,25 h
M_x
0,5U_o d
U_o (d_c-d')/2
M
S
M_x (x,d)
P
0,25U_o d'
h
x
0
2,5 d'
d
1,25 d
1,25 h
-U_o (d_c-d')/2
M_y (x,d)

Figure A.7.2

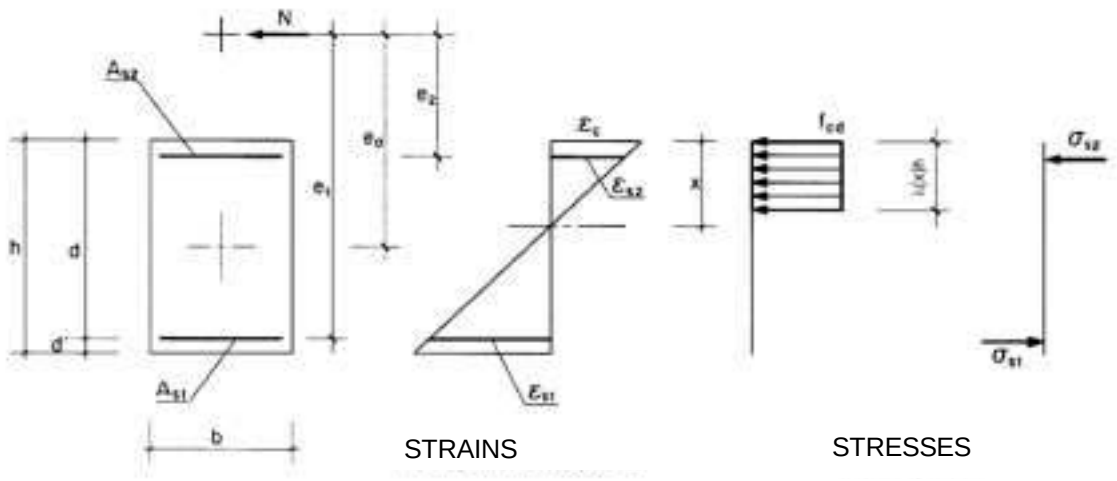

Figure A.7.3

3. Simple bending in rectangular section

3.1. Dimensioning

3.1.1. Neutral fibre confined to a prefixed depth, x_f, less than or equal to the limit depth, x_l

For concretes where $f_{ck} \leq 50$ N/mm^2, the limit depth is $x_l = 0{,}625\ d$. The frontal moment is:

$$M_f = 0.8 U_0\, x_f \left(1 - 0{,}4 \frac{x_f}{d}\right)$$

1° $M_d \leq M_f$

$$U_{s2} = 0$$

$$U_{s1} = U_0 \left(1 - \sqrt{1 - \frac{2 M_d}{U_0\, d}}\right)$$

2° $M_d > M_f$

$$s_{2f} = \frac{2}{3}\left(\frac{x_f - d'}{d'}\right) \not> 1{,}0$$

$$U_{s2} = \frac{1}{s_{2f}}\left(\frac{M_d - M_f}{d - d'}\right)$$

$$U_{s1} = 0{,}8 U_0 \frac{x_f}{d} + \frac{M_d - M_f}{d - d'}$$

The above formulas assume that the section will only have reinforcement in the compressed face if the design bending force M_d is greater than the frontal moment, i.e. the bending of the

compressed concrete block about the fibre where the tensioned reinforcement is located, for $x = x_f$.

Case 1° corresponds to dimensioning situations where $0 < x \leq x_f$. In case 2°, the position of the neutral fibre, $x = x_f$, remains constant.

The possibility of dimensioning by fixing the depth of the neutral fibre below the limit depth is useful in cases where sections must have greater ductility.

3.1.2. The prefixed fibre is located at the limit depth, x_l

1° $M_d \leq 0{,}375\, U_0 d$

$$U_{s2} = 0$$

$$U_{s1} = U_0 \left(1 - \sqrt{1 - \frac{2 M_d}{U_0 d}} \right)$$

2° $M_d > 0{,}375\, U_0 d$

$$U_{s2} = \frac{M_d - 0{,}375\, U_0 d}{d - d'}$$

$$U_{s1} = 0{,}5\, U_0 + U_{s2}$$

The above formulas assume that the section will only have reinforcement in the compressed face if the design bending force M_d is greater than the limit moment $0{,}375\, U_0 d$, i.e. the bending of the compressed concrete block about the fibre where the tensioned reinforcement is located, for $x = 0{,}625\, d$, which assumes a deformation in the steel fibre of $\varepsilon_y = 0{,}002$.

Case 1° corresponds to dimensioning situations where $0 < x \leq 0{,}625\, d$. In case 2°, the position of the neutral fibre, $x = 0{,}625\, d$, remains constant.

3.2. Checking

1° $U_{s1} - U_{s2} < U_v$

$$M_u = 0{,}24\, U_v\, d' \frac{(U_v - U_{s1} + U_{s2})(1{,}5 U_{s1} + U_{s2})}{(0{,}6 U_v + U_{s2})^2} + U_{s1}(d - d')$$

2° $U_v \leq U_{s1} - U_{s2} \leq 0{,}5 U_0$

$$M_u = (U_{s1} - U_{s2}) \left(1 - \frac{U_{s1} - U_{s2}}{2 U_0} \right) d + U_{s2}(d - d')$$

3° $0{,}5 U_0 < U_{s1} - U_{s2}$

$$M_u = \frac{4}{3} U_{s1} \left(\frac{\alpha + 1{,}2}{\alpha + \sqrt{\alpha^2 + 1{,}92 \frac{U_{s1}}{U_0}}} - 0{,}5 \right) d + U_{s2}(d - d')$$

where:

$$\alpha = \frac{U_{s1} + 0{,}6\, U_{s2}}{U_0}$$

In case 1°, the neutral fibre is positioned between $0 < x < 2{,}5d'$. In case 2°, the neutral fibre is positioned between $2{,}5\ d' \leq x \leq 0{,}625\ d$. In case 3°, the neutral fibre is positioned between $0{,}625\ d < x < d$.

4. Simple bending in T-section

For a T-section, the following definitions are used:

$$U_{Tc} = f_{cd}\, b\, h_0$$

$$U_{Ta} = f_{cd}\, (b-b_0)\, h_0$$

When $h_0 > 0{,}8\ d$, the depth of the neutral fibre in the rectangular block is less than h_0 and the section can be calculated as if it were a box section, $b \times h$. As a result, it is only necessary to analyse in this section the problem which arises when $h_0 < 0{,}8\ d$. This limitation must be deemed to be met in order to use the following expressions.

4.1. Dimensioning

4.1.1. Neutral fibre confined to a prefixed depth, x_f, less than or equal to the limit depth, x_l

1° $h_o \geq 0{,}8\ x_f$

The dimensioning will be carried out according to section 3.1, taking the width of the compression flange as the section width.

2° $h_o < 0{,}8\ x_f$

2°A $M_d \leq U_{Tc}\ (d - 0{,}5h_0)$

As in case 1°, the dimensioning is carried out according to section 3.1, taking the width of the compression flange as the section width.

2°B $M_d \geq U_{Tc}\ (d - 0{,}5h_0)$

In this case, the dimensioning will be carried out according to section 3.1 but using an equivalent design moment, as defined below:

$$M_d^e = M_d - U_{Ta}\ (d - 0{,}5\ h_0)$$

and taking the web width as the section width and defining the mechanical capacity of the resulting reinforcement as:

$$U_{s1} = U_{s1}^e + U_{Ta}$$

$$U_{s2} = U_{s2}^e$$

where U_{s1} and U_{s2} are the mechanical capacities resulting from the dimensioning and U_{s1}^{e} and U_{s2}^{e} are the values obtained according to section 3.1 for M_d^e.

In case 1°, the depth of the compressed block will always be within the flange of the section, without involving the web.

In case 2°, dimensioning situations may be given in which the compressed block also involves the web. In case 2A, the compressed block will only be located within the flange of the section and the same expressions as for case 1° may therefore be used. In case 2B, the compressed block involves part of the web of the section but the contribution of the flanges does not vary with the position of the neutral fibre. As a result, the section can be dimensioned as if this were a box section with a width equal to that of the web, using different moment and mechanical capacity values to take account of the effect of the compression flanges.

4.1.2. The prefixed fibre is located at the limit depth, x_l

This case will be analysed according to section 4.1.1 with $x_f = x_l$.

4.2. Checking

The following non-dimensional variables are defined:

$$s_1 = s_1(1{,}25h_0) = \frac{\sigma_{s1}(1{,}25\,h_0)}{f_{yd}}$$

$$s_2 = s_2(1{,}25h_0) = \frac{\sigma_{s2}(1{,}25\,h_0)}{f_{yd}}$$

$$\beta = \frac{d}{2\,h_0} \not> 1{,}0$$

where:

σ_{s1} (1,25 h_0) Stress in reinforcement A_{s1} for x = 1,25 h_0

σ_{s2} (1,25 h_0) Stress in reinforcement A_{s2} for x = 1,25 h_0

1° $U_{Tc} + U_{s1}\,s_1 + U_{s2}\,s_2 \geq 0$

The section will be checked according to section 3.2, taking the width of the compression flange as the section width.

2° $U_{Tc} + U_{s1}s_1 + U_{s2}s_2 < 0$

2 A. $U_{s1} - U_{s2} \leq 0{,}5\,f_{cd}\,b_0 d + ß\,U_{Ta}$

The section will be checked according to action 3.2, taking into account the equivalent mechanical capacities of the reinforcements which are defined below:

$$U_{s1}^{e} = U_{s1} - U_{Ta}$$
$$U_{s2}^{e} = U_{s2}$$

The ultimate moment resisted by the section will be:

$$M_u = M_u^e + U_{Ta}\,(d - 0{,}5\,h_0)$$

where M_u^e is the moment obtained according to section 3.2, taking the web width as the section width and taking into account the equivalent mechanical capacities U_{s1}^e and U_{s2}^e.

2 B. $U_{s1} - U_{s2} > 0{,}5\,f_{cd}\,b_0\,d + ß\,U_{Ta}$

The section will be checked according to section 3.2, taking the web width as the section width and taking into account the equivalent mechanical capacities of the reinforcements which are defined below:

$$U_{s1}^e = U_{s1}$$
$$U_{s2}^e = U_{s2} - U_{Ta}$$

The ultimate moment resisted by the section will be:

$$M_u = M_u^e - U_{Ta}\,(0{,}5\,h_0 - d')$$

where M_u^e is the moment obtained according to section 3.2, taking the web width as the section width and taking into account the equivalent mechanical capacities U_{s1}^e and U_{s2}^e.

In case 1°, the depth of the compressed block is always contained within the flange of the section, without involving the web.

In case 2°, the web is always involved in the compressed block.

5. Dimensioning and checking of box sections subject to straight combined bending. Symmetrical reinforcement arranged in two layers with equal covers.

A simplified calculation method for box sections with two symmetrical reinforcement layers is developed below.

5.1 Dimensioning

CASE 1° $N_d < 0$

$$U_{s1} = U_{s2} = \frac{M_d}{d - d'} - \frac{N_d}{2}$$

CASE 2° $0 \le N_d \le 0{,}5\,U_0$

$$U_{s1} = U_{s2} = \frac{M_d}{d - d'} + \frac{N_d}{2} - \frac{N_d\,d}{d - d'}\left(1 - \frac{N_d}{2U_0}\right)$$

CASE 3° $N_d > 0{,}5\ U_0$

$$U_{s1} = U_{s2} = \frac{M_d}{d - d'} + \frac{N_d}{2} - \alpha \frac{U_0\, d}{d - d'}$$

With

$$\alpha = \frac{0{,}480\ m_1 - 0{,}375\ m_2}{m_1 - m_2} \not> 0{,}5 \left(1 - \left(\frac{d'}{d} \right)^2 \right)$$

where

$$m_1 = (N_d - 0{,}5U_0)(d - d')$$
$$m_2 = 0{,}5N_d(d - d') - M_d - 0{,}32U_0(d - 2{,}5d')$$

5.2. Checking

CASE 1° $e_0 < 0$

$$N_u = \frac{U_{s1}(d - d')}{e_0 - 0{,}5(d - d')}$$

$$M_u = N_u\, e_0$$

CASE 2° $U_{S1}\,(d-d') + 0{,}125\ U_0\,(d + 2d' - 4e_0) \leq 0$

$$N_u = \left[\sqrt{\left(\frac{e_0 - 0{,}5h}{d} \right)^2 + 2\frac{U_{s1}(d - d')}{U_0\, d}} - \frac{e_0 - 0{,}5h}{d} \right] U_0$$

$$M_u = N_u\, e_0$$

CASE 3° $U_{S1}\,(d-d') + 0{,}125\ U_0\,(d + 2d' - 4e_0) > 0$

$$N_u = \frac{U_{S1}(d - d') + \alpha U_0\, d}{e_0 + 0{,}5(d - d')}$$

$$M_u = N_u\, e_0$$

With

$$\alpha = \frac{0{,}480\, m_1 - 0{,}375\, m_2}{m_1 - m_2} \not> 0{,}5\left(1 - \left(\frac{d'}{d}\right)^2\right)$$

Where

$$m_1 = -0{,}5 U_0\, e_0 + \left(U_{s1} + U_{s2}\right)\frac{d - d'}{2} + 0{,}125 U_0 \left(d + 2d'\right)$$

$$m_2 = -\left(U_{s2} + 0{,}8 U_0\right) e_0 + U_{s2}\frac{d - d'}{2} + 0{,}08 U_0 \left(d + 5d'\right)$$

6. Simple or combined biaxial bending in box section

The method proposed allows the calculation of box sections, with reinforcement at all four corners and equal reinforcements in all four faces, by reducing the problem to one of straight compound bending with a hypothetical eccentricity, as defined below (Figure A.7.4).

$$e_{y'} = e_y + \beta\, e_x \frac{h}{b}$$

where:

$$\frac{e_y}{e_x} \geq \frac{h}{b}$$

and *ß* is defined in Table A.7.6.

TABLE A.7.6

$v = N_d / (bhf_{cd})$	0	0,1	0,2	0,3	0,4	0,5	0,6	0,7	>0,8
ß	0,5	0,6	0,7	0,8	0,9	0,8	0,7	0,6	0,5

For high quantities (ω > 0,6), the values indicated for *ß* will be increased by 0,1 and, for small quantities (ω < 0,2), the values of *ß* will be reduced by 0,1.

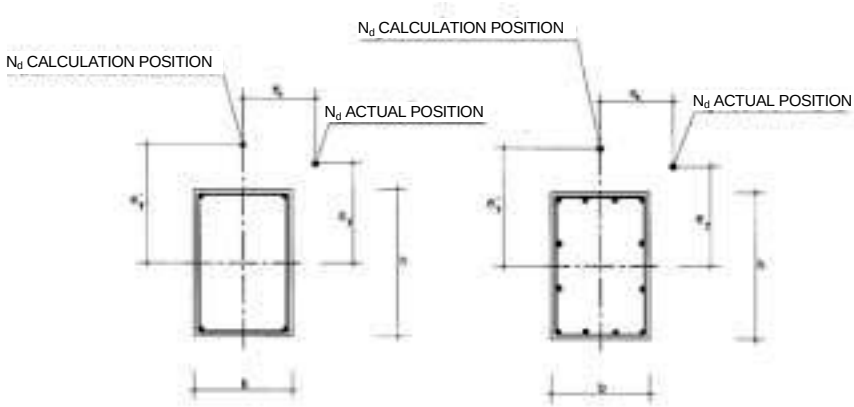

Figure A.7.6

ANNEX 8

In-service analysis of structural sections and elements subject to simple bending

1 Scope

This Annex sets out the expressions allowing the various parameters governing the sectional behaviour of rectangular (box) and T-section s, under linear cracking conditions, to be determined: depth of the neutral fibre *X,* stress state of the reinforcement fibres σ_{s1} and σ_{S2} and of the concrete σ_c*, strains* in the reinforcements ε_{s1} and ε_{S2}, and stiffness values.

The expressions in this Annex allow the stresses in the tensioned reinforcement (σ_s, σ_{sr}) to be determined in order to check the Cracking Limit State (Article 49) and they also allow the cracked inertia (I_f) to be determined in order to check the Deformation Limit State (Article 50).

This Annex also deals with checking the Serviceability Limit States (cracking and deformations) in reinforced or prestressed linear elements, composed of one or more concretes, in which the construction stages must be borne in mind. Some of the expressions contained in this Annex are generalisations of those in the main articles, for example the expression relating to equivalent inertia which is a generalisation of the Branson formula for the case of compound and/or prestressed members.

Finally, expressions are given for calculating delayed deflection. These are more appropriate for high-strength concretes than those in the main articles and are useful in cases where the determination of the deflection needs to be refined.

2 Calculation of sections in service with cracking.

2.1 Basic assumptions

The assumptions made in order to produce the expressions given are as follows:

- The plane of strain remains plane after deformation.
- Perfect bond between concrete and steel.
- Linear behaviour for the compressed concrete.

$$\sigma_c = E_c \varepsilon_c$$

- The tensile strength of the concrete is ignored.
- Linear behaviour for the steels, under both tension and compression.

$$\sigma_{s1} = E_s \varepsilon_{s1}$$

$$\sigma_{s2} = E_s \varepsilon_{s2}$$

2.2 Rectangular section

For rectangular sections, the values of the parameters defining the sectional behaviour (Figure A.8.1) are:

- Relative depth of the neutral fibre

$$\frac{X}{d} = n\,\rho_1\left(1+\frac{\rho_2}{\rho_1}\right)\left(-1+\sqrt{1+\frac{2\left(1+\frac{\rho_2}{\rho_1}\frac{d'}{d}\right)}{n\,\rho_1\left(1+\frac{\rho_2}{\rho_1}\right)^2}}\right)$$

$$\text{if } \rho_2 = 0 \;\Rightarrow\; \frac{X}{d} = n\,\rho_1\left(-1+\sqrt{1+\frac{2}{n\,\rho_1}}\right)$$

- Cracked inertia

$$I_f = n\,A_{s1}(d-X)\left(d-\frac{X}{3}\right) + n\,A_{s_2}(X-d')\left(\frac{X}{3}-d'\right)$$

where:

$$n = \frac{E_s}{E_c}$$

$$\rho_1 = \frac{A_{s1}}{bd}$$

$$\rho_2 = \frac{A_{s2}}{bd}$$

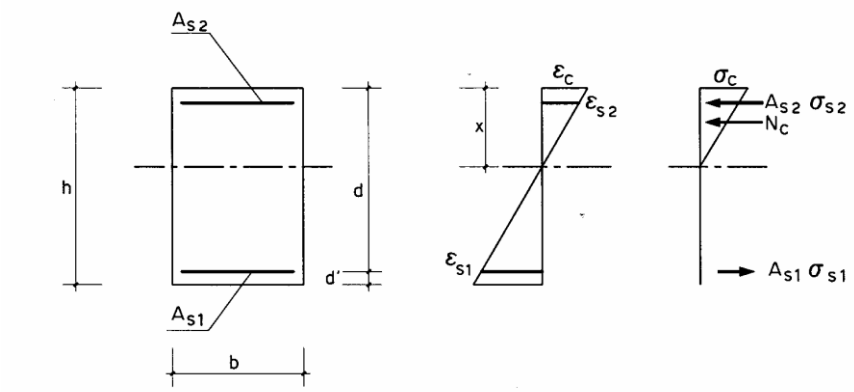

Figure A.8.1

2.3 T-section

For T-sections, the values of the parameters defining the sectional behaviour (Figure A.8.2) can be determined using the expressions defined below.

$$\delta = \frac{h_0}{d}$$

$$\xi = \delta \left(\frac{b}{b_0} - 1 \right)$$

$$\rho_1 = \frac{A_{s1}}{b\ d}$$

$$\rho_2 = \frac{A_{s2}}{b\,d}$$

$$\beta = \xi + n\,(\rho_1 + \rho_2)\ \frac{b}{b_0}$$

$$\alpha = 2\,n\,(\rho_1 + \ \rho_2 \frac{d'}{d}) \frac{b}{b_0} + \xi\ \ \delta$$

1º. $n\,\rho_1 \leq \frac{1}{2} \frac{\delta^2 + 2n\rho_2(\delta - d'\ /\,d)}{(1-\delta)}$

The values of *X/d* and I_f will be determined using the expressions in section 3 for rectangular sections, taking the width of the compression flange as the section width.

2°. $n\,\rho_1 > \frac{1}{2} \frac{\delta^2 + 2n\rho_2(\delta - d'\ /\,d)}{(1-\delta)}$

- Relative depth of the neutral fibre

$$\frac{X}{d} = \beta \left(-1 + \sqrt{1 + \frac{\alpha}{\beta^2}} \right)$$

- Cracked section inertia

$$I_f = I_c + n\,A_{s1}(d - X)^2 + n\,A_{s2}(X - d')^2$$

$$I_c = b\,h_0\left[\frac{h_0^2}{12} + \left(X - \frac{h_0}{2}\right)^2\right] + \frac{b_0(X - h_0)^3}{3}$$

In case 1, the position of the neutral fibre in the cracked section is included within the compression flange and, as a result, the expressions for calculating the parameters governing the sectional behaviour are those corresponding to the rectangular section

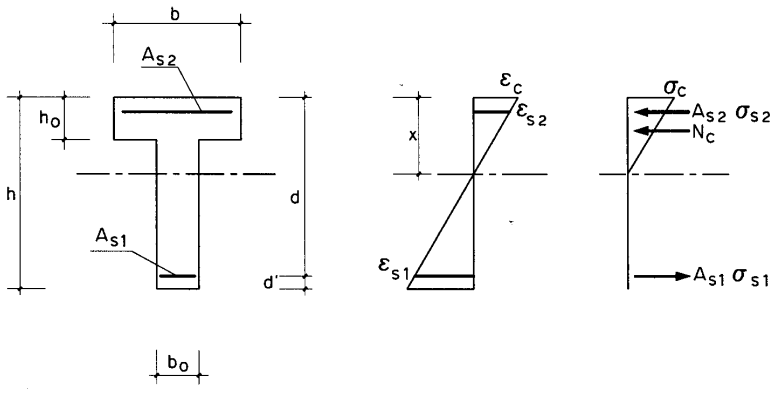

Figure A.8.2.

2.4 Curvature and stresses

The curvature and stresses in the concrete and in the various steel fibres can be determined using the following expressions:

- Curvature

$$\frac{1}{r} = \frac{M}{E_c\,I_f}$$

- Compressive stress in the most compressed concrete fibre

$$\sigma_c = \frac{M\,X}{I_f}$$

- Stress in the reinforcements

$$\sigma_{s1} = n\,\sigma_c\,\frac{d - X}{X}$$

$$\sigma_{s2} = -n\,\sigma_c\,\frac{X - d'}{X}$$

3. Checking the cracking in one-way floor slabs composed of precast elements and site-cast concrete.

For structures composed of precast elements and site-cast concrete, the stress calculation must take account of the various stages through which these structural elements pass in terms of both the acting loads and also the support and load bearing conditions. The following must therefore be taken into account:

- the self-weight of the precast element (prestressed hollow-core slab or beam, if prestressed) calculated as a simple supported element without intermediate shores, acting on the simple section;
- the self-weight of the rest of the floor slab will act on a continuous beam with as many spans as there are intermediate shores plus one, acting on the simple section;
- the effect of unshoring (application of the reactions due to the intermediate shores on the final configuration), acting on the compound section;
- application of the permanent load and overload, acting on the final configuration and compound section.

In particular, the self-weight of the prestressed elements (beams or hollow-core slabs) must not be assumed to be continuous or supported. Rather, the isostatic bending moment corresponding to their on-site location between end supports, without any intermediate shores and acting on the isolated element (simple section), must be taken into account.

If the joist is reinforced, its self-weight is not regarded as an independent stage but is included, however, in the next stage, such as the rest of the self-weight of the floor slab.

The above process can make determining the stresses more complex. In the absence of other criteria, the procedure indicated below can be followed to simplify matters.

The stresses can be determined using Navier's Hypothesis and the following sections: simple, compound uncracked and cracked corresponding to each situation. For sections subject to positive moments, the checking moment will be given by:

$$M_p = \left(g_1 + (1 - K_1)g_2\right)\frac{L^2}{8} + \left(g_3 + q\right)\frac{L_0^{\,2}}{8}$$

and for negative moments:

$$M_n = \left[K_2 g_2 + g_3 + q\right]\frac{L_0^{\,2}}{8}$$

where:

α	Ratio between section modulus (W_{1h}' / W_{1h})
W_{1h}	Section modulus of the simple section. Figure A.8.3
W_{1h}'	Section modulus of the compound section. Figure A.8.3
K_1, K_2	Factors, according to Table A.8.3
L	Span of the floor slab
L_0	Distance between points of zero moment, corresponding to the continuous situation of the floor slab
g_1	Variable corresponding to the self-weight of the precast element, if prestressed, and which will take a zero value in the case of reinforced elements
g_2	Variable corresponding to the self-weight of the beam if reinforced, to the self-weight of the site-cast concrete and, where applicable, to the infill blocks
g_3	Variable corresponding to the permanent load (for example, flooring)
q	Overloads

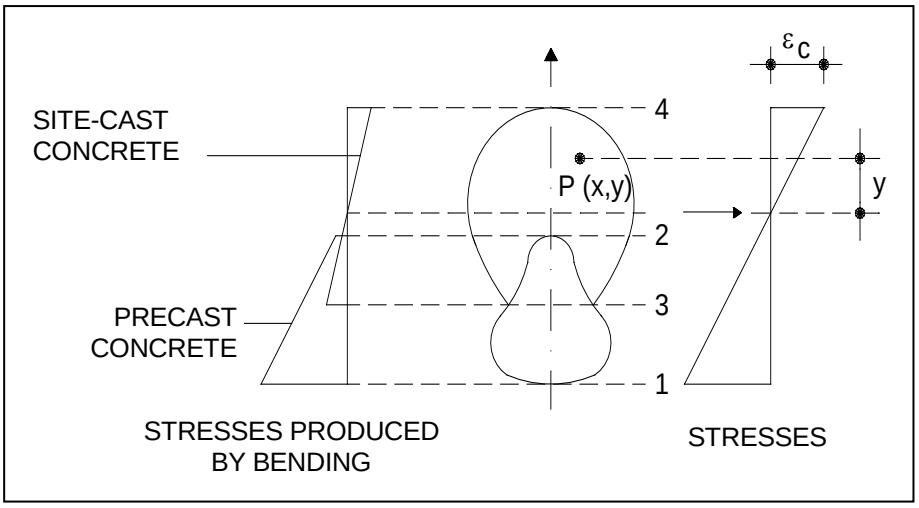

Figure A.8.3.
Cracking Limit States

Table A.8.3

Case		K_1	K_2
	Without secondary supports	0	0
	One row of secondary supports	$1{,}25\left[1-\frac{5}{16}\frac{(\alpha-1)g_2}{\alpha(g_1+g_2)+g_3+q}\right]$	1,25
	Two rows of secondary supports at thirds along the span	0,98	0,98
	Two rows of secondary supports at 0,4 L from each support	1,06	1,06
	Three or more rows of secondary supports	1	1

Attention is drawn to the importance of carrying out a correct floor slab shoring procedure, without which the above formulas will not be valid. Therefore, in the case of reinforced elements, levelled shores must be placed all at the same height. On the other hand, in the case of floor slabs with prestressed elements, the shores are placed against the lower edge of the precast element after this has been put into place, supported at its ends.

4. Simplified calculation of instantaneous deflections in prestressed members or those constructed in stages

The Branson formula given in Article 50.2.2 for calculating the instantaneous deflection in the case of reinforced concrete beams constructed in a single stage can be generalised for the case of reinforced or prestressed members constructed in one or more stages or composed of precast elements and site-cast concrete, such as one-way floor slabs. The equivalent inertia of the section in question can be determined using the expression:

$$I_e = \left(\frac{M_f - M_0}{M_a - M_0}\right)^3 I_b + \left(1 - \left(\frac{M_f - M_0}{M_a - M_0}\right)^3\right) I_f \leq I_b$$

where:

I_b Moment of inertia of the gross section.

I_f Moment of inertia of the cracked section under simple bending; this is determined by ignoring the tension zone of the concrete and standardising the areas of the active and passive reinforcements by multiplying these by the coefficient of equivalence.

M_a Maximum bending moment applied to the section up to the instant when the deflection is assessed.

M_f Cracking moment, calculated as follows:

$$M_f = W\ (f_{ct,f} + \sigma_{cp}) + M_v \left(1 - \frac{W}{W_v}\right)$$

where:

W Section modulus about the most highly tensioned fibre of the section, which will be:
- that of the precast member *(W_v)*, in the case of unshored construction, where the deflection is calculated under the self-weight of this member or the site-cast concrete.
- that of the floor slab (W_f) at any stage of shored construction and in service.

$f_{ct,m,fl}$ Mean flexural strength of the concrete defined in Article 39.1.

σ_{cp} Prior stress in the lower fibre of the precast member, produced by the prestressing.

M_v Moment due to the loads acting on the precast member before working together with the site-cast concrete, for which the value is:
- For unshored construction, the moment due to the self-weight of the precast member and to the weight of the site-cast concrete.
- For unshored construction, zero if the member is reinforced and the moment due to its self-weight if this is prestressed.
- Zero in the end sections subject to negative moments.

M_0 Bending moment associated with the zero curvature situation of the section, with a value of:

$$M_0 = P \cdot e \cdot ß - M_v \cdot (ß-1)$$

where:

P Absolute value of the prestressing force, where this exists, which may be taken as equal to 90% of the initial prestressing force.

e Eccentricity of the equivalent prestressing tendon, in the section under study, with an absolute value, about the centre of gravity of the beam or hollow-core slab.*ß* Ratio between the gross inertia of the floor slab section in the construction stage in which the deflection is calculated and the gross inertia of the section of the precast member, greater than or equal to one. In unshored construction, where the deflection is calculated under the self-weight of the precast member or site-cast concrete, *ß*=1.

The value of the cracked inertia given in the formula is the lowest which the section under study may historically have reached during the construction process, including due to the application of loads which are subsequently removed, as is the case with the shoring of upper slab floors on a lower unshored floor.

The bending force M_0 is designed to take account of the prestressing effect and the evolution of the section in the calculation of the equivalent stiffness in the cracked stage, in order to start with zero curvature. It may be observed that, when there is only a precast member, without any site-cast concrete, $ß = 1$ and $M_0 = P \cdot e$.

In the span centre section of floor slabs with prestressed hollow-core slabs or beams, the following approximate expression may be used to calculate the cracked inertia I_f which takes account of the reduction in stiffness as the stresses increases:

$$I_f = I_{f0} + \alpha \cdot (I_b - I_{f0}) \leq I_b$$

where:

I_{fo} Inertia of the cracked section under simple bending, calculated taking into account the active reinforcement as if this were passive, i.e. taking into account a zero prestressing force.

I_b Inertia of the gross concrete section of the floor slab section.

α Inertia interpolation factor whose value, always between 0 and 1, is:

$$\alpha = \frac{\sigma_{cp}}{\frac{M_v}{W_v} + \frac{M_a - M_v}{W_f} - f_{ct,f}}$$

W_v, σ_{cp}, M_v and M_a have the same meaning as indicated above.

In the case of floor slabs with reinforced concrete precast members, the inertia of the cracked section is $I_f = I_{f0}$, given that $\alpha = 0$.

ANNEX 9

Additional considerations on durability

1. Calculations relating to the Durability Limit State

The Durability Limit State is defined as the failure occurring due to the characteristic working life of the structure not being reached, as a result of the concrete or reinforcement deterioration processes reaching such a degree that they prevent the structure from behaving in accordance with the assumptions under which it was designed.

In order to check the Durability Limit State, this Code lays down a semi-probabilistic procedure similar to that adopted for the other Limit States.

When checking the Limit State, the following condition must be met:

$$t_L > t_d$$

where:

t_L Estimated value of the working life
t_d Design value of the working life

The design working life is defined as the characteristic working life multiplied by a safety factor:

$$t_d = y_t \ t_g$$

where:

t_d Design working life
γ_t Safety factor for working life with value $\gamma_t = 1{,}10$
t_g Design working life

1.1 General method

The general calculation method involves the following stages:

1. Choice of the design working life, according to 5.1.

2. Choice of the safety factor for working life

3. Identification of the environmental exposure classes to which the structure may be subject. For each class, identification of the predominant deterioration process.

4. Selection of the durability model corresponding to each deterioration process. Section 1.2 of this Annex contains some of the applicable models for the reinforcement corrosion processes.

5. Application of the model and estimation of the working life of the structure t_L.

6. Checking of the Limit State for each of the deterioration processes identified as relevant to the durability of the structure.

1.2. Durability models for the corrosion processes

1.2.1 General

In the case of corrosion, both by carbonation and by chlorides, the total time t_L needed for the attack or deterioration to become significant can be expressed as:

$$t_L = t_i + t_p$$

where:

- t_i Corrosion initiation period, understood as the time taken by the penetration front of the aggressive agent to reach the reinforcement thereby causing the corrosion to start.
- t_p Propagation period (propagation time of the corrosion until the structural element suffers significant deterioration).

This section sets out some of the applicable models for estimating the development of the deterioration processes linked to the corrosion of reinforcements. The Designer may opt for any other model endorsed by the specialised bibliography.

When checking the Limit State in the case of active reinforcements, the propagation period shall be regarded as $t_p=0$.

In the case of post-tensioned active reinforcements which are placed in accordance with the minimum covers laid down in the main articles, this Limit State does not usually need to be checked.

1.2.2 Initiation period

Both carbonation and chloride penetration are diffusion processes through the pores of the concrete and which may be modelled in accordance with the following expression:

$$d = K.\sqrt{t}$$

where:

- d Depth of penetration of the aggressive agent, for an age t.
- K Factor which depends on the type of aggressive process, the characteristics of the material and the environmental conditions.

1.2.2.1 Carbonation model

The period of time required for carbonation to occur at a distance d from the surface of the concrete may be estimated using the following expression:

$$t = (d/K_c)^2$$

where:

- d Depth, in mm.
- t Time, in years.

The carbonation factor K_c may be determined as:

$$K_c = c_{env} \cdot c_{air} \cdot a \cdot f_{cm}^{b}$$

where:

f_{cm} Mean compressive strength of the concrete, in N/mm², which may be estimated from the specified characteristic strength *(f_{ck}).*

$$f_{cm} = f_{ck} + 8$$

c_{env} Environmental factor, according to Table A.9.1.
c_{air} Air-entraining factor, according to Table A.9.2.
a, b Parameters which are a function of the type of binder, according to Table A.9.3.

Table A.9.1
Factor c_{env}

Environment	c_{env}
Protected from rain	1
Exposed to rain	0,5

Table A.9.2
Factor c_{air}

Occluded air (%)	c_{air}
< 4,5%	1
≥ 4,5%	0,7

Table A.9.3
Coefficients *a* and *b*

Binder	Cements from Guidelines RC 03	*a*	*b*
Portland cement	CEM I CEM II/A CEM II/B-S CEM II/B-L CEM II/B-LL CEM II/B-M CEM/V	1800	-1,7
Portland cement + 28% fly ash	CEM II/B-P CEM II/B-V CEM IV/A CEM IV/B	360	-1,2
Portland cement + 9% silica fume	CEM II/A-D	400	-1,2
Portland cement + 65% slag	CEM I II/A CEM III/B	360	-1,2

1.2.2.2 Chloride penetration model

The period of time required for a chloride concentration C_{th} to occur at a distance d from the surface of the concrete may be estimated using the following expression:

$$t = \left(\frac{d}{K_{Cl}} \right)^2$$

where

d Depth, in mm.
t Time, in years.

The chloride penetration coefficient K_{Cl} has the following expression:

$$K_{Cl} = \alpha \sqrt{12D(t)} \left(1 - \sqrt{\frac{C_{th} - C_b}{C_s - C_b}} \right)$$

where:

α Unit conversion factor equal to 56157.

D(t) Chloride effective diffusion coefficient, for age *t*, expressed in cm²/s.

C_{th} Critical chloride concentration, expressed in % of cement weight.

C_s Chloride concentration in the surface of the concrete, expressed in % of cement weight. As this chloride concentration is usually determined as % of concrete weight, its equivalent % of cement weight can be calculated using the cement content of the concrete (in kg/m^3) as:

C_s (% of cement weight) = C_s (% of concrete weight) * (2300/cement content)

C_b Content of chloride from materials (aggregates, cement, water, etc.), when the concrete mix is prepared.

The chloride diffusion coefficient varies with the age of the concrete according to the following expression:

$$D(t) = D(t_0) \left(\frac{t_0}{t} \right)^n$$

where $D(t_0)$ is the chloride diffusion coefficient at age t_0, $D(t)$ is the coefficient at age *t,* and *n* is the age factor which may be taken, in the absence of specific values determined through tests on the concrete in question, as equal to 0,5.

In order to use the chloride penetration model, the value of $D(t_0)$ determined through specific diffusion tests may be used (in which case t_0 would be the age of the concrete at which the test was performed) or the values in the following table may be used (determined for t_0 = 0,0767).

Table A.9.4

Coefficients D (t_0) (x10^{-12} m^2/s)

Type of cement	*w/c* = 0,40	*w/c* = 0,45	*w/c* = 0,50	*w/c* = 0,55	*w/c* = 0,60
CEM I	8,9	10,0	15,8	19,7	25,0
CEM II/A-V	5,6	6,9	9,0	10,9	14,9
CEM III	1,4	1,9	2,8	3,0	3,4

The critical chloride concentration (C_{th}) must be established by the Designer in accordance with the specific considerations for the structure. Under normal conditions, a value of 0,6% of the cement weight may be adopted for checking the Limit State in relation to the corrosion of the passive reinforcements. In the case of pre-tensioned active reinforcements, a limit value of C_{th} of 0,3% of the cement weight may be adopted.

The value of C_s depends on the external conditions, particularly the orography of the ground and the predominant winds in the area, in the case of environments close to the coast. C_s also varies with the age of the concrete, reaching its maximum value at 10 years. In the absence of values determined through tests on concrete structures situated in the vicinity, the Designer shall assess the possibility of adopting a value of C_s in accordance with Table 4.9.4, according to the general exposure class indicated in 8.2.2:

Table A.9.4

Chloride concentration at the surface of the concrete

General exposure class	IIIa		IIIb	IIIc	IV
Distance from the coast	Up to 500 m	500 m – 5000 m	Any		—
C_s (% of concrete weight)	0,14	0,07	0,72	0,50	0,50

1.2.3 Propagation period

The propagation stage is regarded as having ended when an unacceptable loss of section of the reinforcement occurs or when cracks appear in the concrete cover. The period of time taken for this to occur may be determined using the following expression:

$$t_p = \frac{80}{\phi} \frac{d}{v_{corr}}$$

where

t_p Propagation time, in years.
d Cover thickness, in mm.
ϕ Diameter of the reinforcement, in mm.
V_{corr} Corrosion rate, in μm/year.

In the absence of specific experimental data for the concrete and the specific environmental conditions of the structure, the corrosion rate may be determined from Table A.9.5.

Table A.9.5

Corrosion rate Vcorr according to the general exposure class

General exposure class			V_{corr} (μm/year)
Normal	High humidity	IIa	3
	Average humidity	IIb	2
Marine	Aerial	IIIa	20
	Submerged	IIIb	4
	In tidal zone	IIIc	50
With chlorides other than from the marine environment		IV	20

1.2.4 Estimation of working life due to the corrosion of reinforcements

Therefore, the total time, determined by adding together the initiation period and the corrosion propagation period, will be, in the case of corrosion by carbonation:

$$t_L = t_i + t_p = \left(\frac{d}{K_c}\right)^2 + \frac{80}{\phi}\frac{d}{v_{corr}}$$

In the case of corrosion by chlorides, this will be:

$$t_L = t_i + t_p = \left(\frac{d}{K}\right)^2 + \frac{80}{\phi}\frac{d}{v_{corr}}$$

2. Contribution of coating mortars to the cover of reinforcements

The articles in this Code allow the contribution of coatings which are impermeable, definitive and permanent compacts to be taken into account. In this respect, in the general exposure classes IIa, IIb and IIIa, without a specific exposure class, various alternatives may be used. If coating mortars are used, the value by which the thickness of mortar used must be multiplied to determine the equivalent cover which may be added to the actual concrete cover is defined as the “cover equivalence factor (λ)”. Tables A.9.6 and A.9.7 provide the values of λ for the most common environments in the case of building structures. Under no circumstances coating thicknesses in excess of 20 mm shall be used.

Table A.9.6
Cover equivalence factor for mortars
in environments IIa and IIb

Carbonation rate (mm/day1/2)	λ
$\leq$ 2,0	0,5
$\leq$ 1,0	1,0
$\leq$ 0,7	1,5
$\leq$ 0,5	2,0

Table A.9.7
Cover equivalence factor for mortars in environment IIIa

Chloride penetration rate (mm/day1/2) (*)	λ
≤ 3,4	0,5
≤ 1,7	1,0
≤ 1,1	1,5
≤ 0,9	2,0

(*) In order to determine the chloride penetration rate, and in the absence of a specific regulation, it is recommended that the test conditions described in Chapter 3 of standard AASTHO T259-80 are used. These conditions should be maintained until ages of not less than 90 days and the chloride penetration rate should be determined by any appropriate procedure (such as, for example, by colorimetric determination of the chloride penetration front with $AgNO_3$ at different intermediate ages).

Alternatively, for environment IIIa, the equivalence factor criterion laid down in Table A.9.8 may also be used.

Table A.9.8
Cover equivalence factor for mortars
in environment IIIa

Capillary action (kg/m^{2}h1/2) according to Recommendation RILEM CPC 11.2.	λ
≤ 0,40	0,5
≤ 0,20	1,0
≤ 0,15	1,5
≤ 0,10	2,0

So that a mortar can be used as indicated in this section, its components (cement, aggregates, additives, additions, etc.) must comply, where applicable, with the specifications for each of these in this Code. In addition, regardless of the value of its equivalence factor, the specifications in Table A.9.9 must also be met.

Table A.9.9
Characteristics of the mortar to be used in coatings,
in order to be taken into account for the purposes of this Annex.

Characteristic	Requirement
Flexural strength according to UNE-EN 1015-11	≥ 2 N/mm²
Modulus of elasticity according to ASTM C 469	≤ 25000 N7mm^2
Drying shrinkage, at 28 days, according to ASTM C 157	≤ 0,04%
Bond strength according to UNE-EN 1542	≥ 0,8 N/mm^2
Thermal expansion coefficient according to UNE-EN 1770	≤ 11,7 x 10-6°C-1

If other coatings are used, or in environments other than the above, the Designer must prove, by means of documents, that the protection of the reinforcements in the precast element is similar to that which the thickness of concrete replaced would have provided. To this end, the manufacturer of coating products other than those above must guarantee, by means of documents, their performance and, among other aspects, at least the equivalence factor of the coating.

The specifications in the articles strictly correspond to floor slab durability requirements. Other criteria such as, for example, aesthetic or fire protection criteria may require greater cover thicknesses or the application of other specific protection.

In the case of highly aggressive environments, the value of the covers and the other design provisions must be established, after consulting the specialised technical literature, according to the nature of the environment, type of structural element concerned, etc.

ANNEX 10

Special requirements recommended for structures subject to seismic actions

1 Scope

This Annex sets out the special requirements which are recommended for structural concrete structures subject to seismic actions, in addition to the provisions laid down in the specific regulations on earthquake-resistant construction which apply depending on the type of structure concerned (Earthquake-Resistant Construction Standard NCSE-02 General part and buildings, the NCSE-Bridges or the Guidelines on actions to be taken into account for road bridges - IAP).

Seismic action must be defined as indicated in the applicable earthquake resistance regulations. As a general rule, this will involve elastic response spectra. During a strong earthquake, it is expected that the structure will enter a non-linear range which may dissipate part of the energy introduced by the earthquake. Accordingly, the response spectra to be taken into account in the design may be substantially modified, bearing in mind the structure's capacity to behave in a ductile manner, i.e. to work within a non-linear range of behaviour without any significant loss of strength.

Standard NCSE-02 lays down the following levels of ductility: Very high (μ=4), High (μ=3), Low (μ=2) and No ductility (μ=1). Corresponding to these levels of ductility are behaviour factors (factors used to reduce the elastic spectrum) which may be treated differently in the various seismic regulations, although they are all completely equivalent.

The level of ductility of a structure depends on the structural type, materials, geometric characteristics, regularity in plan and elevation of the masses and distribution of the load bearing elements. Furthermore, the use of structural and construction details is important as these guarantee adequate confinement of the concrete in the zones where the formation of plastic hinges may be expected, prevent buckling of the longitudinal reinforcements in the compression zone and improve the ductile fracture characteristics of critical sections. In high seismicity zones, the use of the "Capacity-based design" philosophy is recommended through which the fracture mode of the structure is controlled, thereby ensuring that, in all cases, the location of critical zones subject to ductile fracture is guaranteed and avoiding these in zones with ductile fracture modes (failures due to shear, torsion, axial compression forces, etc.). This Annex sets out recommendations on construction details, arrangement of reinforcements and design criteria for concrete structures which are appropriate for seismic zones.

For the purposes of earthquake behaviour, it is recommended that the structural types, construction details, etc. which provide the structure with the highest possible ductility are used, particularly if the calculated seismic acceleration is high.

2 Basis of design

2.1 Fundamental requirements

The basis of design for structures subject to seismic actions are as laid down in Title1, Basis of design, of this Code. In Article 13, Combination of Actions, the combination of seismic action with other actions is regarded as a special accidental situation defined as a seismic situation.

Those values indicated in the various action rules will be taken as the representative quasi-permanent values of the variable actions, $\psi_{2,i}Q_{k,i}$. For the purpose of calculating the masses acting during the seismic action, the fraction corresponding to the overload indicated in the applicable seismic regulations or that corresponding to the quasi-permanent value of the overload, $\psi_{2,i}Q_{k,i}/g$, must be included.

2.2 Definitions

Ductility:

Capacity of materials and structures to deform in a non-linear range without suffering any substantial deterioration of the loadbearing capacity. In structural terms, this is defined as the ratio between the ultimate strain at failure and the plastic deformation and may be related to any kinematic reinforcement ratio such as deformation properly speaking, ductility of sections, rotations or displacement of a structure.

Capacity-based seismic design:

Seismic design philosophy in ultimate limit states which is based on protecting the fragile elements and regions of the structure, thereby giving them adequate overstrength with regard to the ductile elements and improving the ductile fracture mechanisms.

Coupled core walls:

Structural element formed of two or more core walls connected in a regular manner at height via coupling beams which have sufficient stiffness to reduce by at least 25% the sum of the fixed-end moments of all the core walls if these were separate.

Plastic hinge:

Area of a structural element where the tension reinforcement has plasticised and where energy may be dissipated through plastic deformation of this reinforcement.

Critical zone:

Region of a primary seismic element where the worst load combinations occur and where a plastic hinge may form.

2.3 Partial safety factors for materials

The partial safety factors for materials, γ_c and γ_s, must take account of the possible deterioration of materials due to cyclic deformations. If there is no detailed information on this aspect, values of γ_c and γ_s corresponding to the persistent or transient situation must be adopted. If the deterioration effect on the strength is explicitly taken into account, the values corresponding to the accidental situation may be used.

2.4 Primary and secondary elements

It is possible to designate certain structural elements as secondary in terms of the earthquake resistance system. These elements will not be regarded as part of the structural system for withstanding seismic actions and therefore do not have to comply with special detailing such as that indicated in section 6 of this Annex.

However, these elements must be dimensioned, according to the capacity-based design criteria, to support the corresponding gravitational load taking into account the maximum displacements produced during the most unfavourable seismic action and bearing in mind the second-order effects. Any structural element which is not dimensioned as secondary must be regarded as primary and, therefore, must be dimensioned to withstand the seismic action and must comply with the details required for the chosen degree of ductility.

The lateral stiffness of all secondary elements must not exceed 15% of that of all primary elements.

For the purposes of the seismic calculation, the stiffness and strength of secondary elements must be ignored. However, the mass of these must be taken into account.

3 Materials

In order to guarantee structural behaviour with high ductility, high-ductility weldable (SD) steels must be used. The characteristics of these are set out in Article 32.2 of this Code.

The use of smooth bars is not permitted. Bars must meet the bond requirements, minimum mechanical characteristics, fatigue characteristics and high-amplitude cyclic load characteristics mentioned in the main articles.

The concrete used must have sufficient compressive strength. The strain at failure of the concrete (ε_u) must exceed the strain under maximum stress (ε_0) by an adequate margin.

If high-strength concretes are used, it must be borne in mind that these have ultimate strain values lower than conventional concretes. In this case, the ductile fracture of the cross-sections must be guaranteed in the calculation by using compression reinforcement providing the appropriate level of ductility.

The strength and ultimate strain of the concrete may be increased by incorporating transverse confinement reinforcement. The strength of confined concrete may be determined using Article 40.3.4 and the peak and ultimate strains (ε_{cc0} and ε_{ccu}) of confined concrete may be determined using the following expressions:

$$\varepsilon_{cc0} = \varepsilon_{c0}\left[1 + 5\left(\frac{f_{ccd}}{f_{cd}} - 1\right)\right]$$

$$\varepsilon_{ccu} = \varepsilon_{cu} + 0{,}1\alpha\ \omega_w$$

where α and ω_w are the parameters defined in Article 40.3.4.

4 Structural analysis

4.1 Calculation methods

The structural analysis methods to be used to study the effects of seismic action are:

Linear methods:

- Modal spectral analysis using a standard response spectrum.
- Equivalent static analysis.

Non-linear methods:

- Non-linear dynamic calculation in the time domain, using a series of accelerograms representing the zone.
- Non-linear static method or incremental pressure method.

In principle, all these methods are applicable to structural concrete structures bearing in mind the requirements and comments in Title 2: Structural analysis. The specific application criteria for each method must be consulted in the applicable seismic regulations.

When considering a ductile behaviour for the structure, the second-order effect caused by the deformations, assessed bearing in mind the deterioration in stiffness suffered by the structure, must particularly be checked.

The stiffness conditions of a structure and, as a result, the stresses induced by the seismic action can vary considerably due to the influence of non-structural elements such as partitions or enclosing walls. The model used for the stress analysis must take account of this effect and the design must define all the details required to guarantee that the collaboration or non-collaboration of these elements in terms of the loadbearing capacity of the structure will be reproduced in the structure, as anticipated in the design.

5 Considerations on the ultimate limit states

5.1 Capacity-based design

During major seismic actions, the capacity to dissipate energy possessed by structures with ductile behaviour reducing the stresses which the elements must withstand is normally used. In this way, at a reasonable cost, the collapse of the structure can be avoided and the lives of the occupants of the structure can be saved. It must be borne in mind that this practice involves accepting significant damage to the structure and therefore a non-linear response which will produce different stresses from those predicted in the elastic calculation.

The capacity-based design criterion is intended to prevent the occurrence of fragile fracture modes which can prevent the structure from behaving correctly, such as transforming the structure into a premature mechanism causing a collapse. The following are some of the effects to be avoided:

- Compression fracture in concrete sections without reaching a plastic stage of the tension reinforcements.
- Fracture by shear fracture or primary torsion.
- Fracture of joints between elements or nodes in frames with rigid nodes
- Plasticisation of the foundations or any element which should remain within the elastic range.
- Buckling failures.
- Concentration of plastic hinges on one storey of a multi-storey structure (see Figure A.10.1).
- Etc.

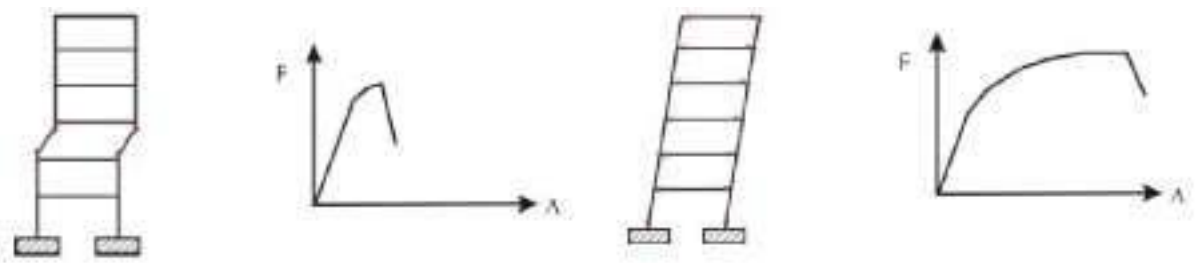

Undesirable fragile behaviour

Desirable ductile behaviour

Figure A.10.1

To avoid undesirable failure modes, the design actions of the elements must be determined using equilibrium conditions, by isolating the element or zone of the structure to be protected from premature failure. The formation of the plastic hinges anticipated in the critical zones is then assumed, taking into account the possible material overstrength factors. The isolated zone must withstand, using the limit state criterion and the corresponding partial safety factors, the stresses deriving from this situation.

Note that, using this criterion, the region or element dimensioned for the stresses thus determined is stronger than the plastic hinges assumed to form at its ends which behave in a ductile non-linear manner and whose plasticisation when subject to a major earthquake is desired. In this way it is guaranteed that the plastic hinge can develop and deform during the seismic action, with the fragile region thus maintaining essentially elastic behaviour.

Below, rules will be given for determining the design stresses in any structural elements according to the capacity-based design criterion.

5.1.1 Shear stress in beams

The shear fracture of beams must be prevented as this can stop the whole ductile bending behaviour of the element from developing. To this end, the design shear stresses, for beams supporting a distributed gravitational load, must be determined based on the system indicated in the following figure. The element is isolated and it is assumed that the end sections have plasticised, thereby forming plastic hinges at the joints; the sign of the stress at each end must be taken into account according to the possible directions of the seismic action (Figure A.10.2).

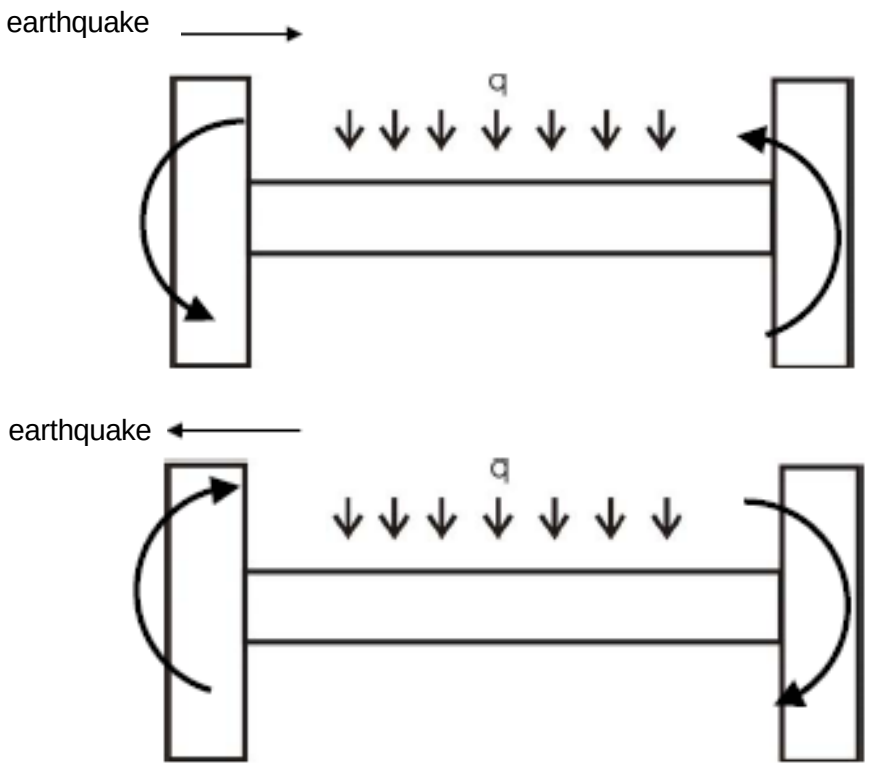

Figure A.10.2

The design shear stress will be the greater of the following possible situations:

$$V_{d1} = \frac{qL}{2} + \gamma_{SR} \frac{\left(M_u^{1-} + M_u^{2+}\right)}{L}$$

$$V_{d2} = \frac{qL}{2} + \gamma_{SR} \frac{\left(M_u^{1+} + M_u^{2-}\right)}{L}$$

where:

q	Distributed load which the beam must support during the earthquake.
L	Clear span of the beam.
M_u^{1+}, M_u^{2+}	Positive resisting bending forces in the end sections of the beam.
M_u^{1-}, M_u^{2-}	Negative resisting bending forces, as an absolute value, in the end sections of the beam.

γ_{SR} Overstrength factor for the end moments with a value of 1,35. This parameter takes account of the actual strength of the steel, bearing in mind the plastic hardening.

5.1.2 Bending moments in supports

To prevent fracture modes such as those indicated in Figure A.10.1 in multi-storey structures, it must be guaranteed, at the beam-column joints, that the plastic hinges form in the beams instead of in the supports. This requirement must be met on all storeys apart from the top storey.

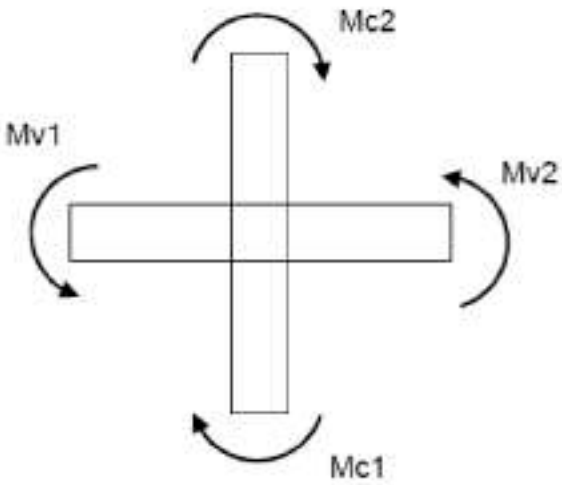

Figure A.10.3.

This requirement is regarded as met if, for each studied direction of the seismic action, it is confirmed that the sum of the ultimate moments in the columns is higher than the sum of the ultimate moments in the beams:

$$\Sigma\, Mu \geq \gamma_{SR}\, \Sigma\, Mu$$

where

γ_{SR} is the overstrength factor with a value of 1,35.

In the above check, the maximum and minimum values which may be taken by the axial force of the supports under the seismic action must be taken into account.

5.1.3 Shear stress in supports

The shear fracture of supports must be prevented and it must be guaranteed that, if the supports fracture, this is due to bending. The design shear stress may be determined for these elements by using similar criteria to that indicated in paragraph 5.1.1, bearing in mind that there is no distributed load in this element and the value of the corresponding axial force. The overstrength factor may be taken as 1,35 for structures with high ductility or as 1,2 for other cases.

5.2 Failure limit state under shear stress

Linear elements cannot be designed without shear reinforcement.

The concrete's contribution to the shear strength *(V_{cu})* is reduced according to the level of ductility required for the section. It is therefore recommended that the independent part of the axial force in the equation corresponding to V_{cu} from Article 44.2.3.2.2 is changed as follows:

$$[\, V_{cu} = \left[\frac{0{,}15\,\kappa}{\gamma_C}\, \xi\, (100\, \rho_l\, f_{ck})^{1/3} + 0{,}15\, \alpha_l\, \sigma'_{cd} \right] \beta b_0\, d$$

where the coefficient κ affecting the term 0,15/γ takes the following values:

- Low or moderate ductility structures: 0,8
- High ductility structures: 0,5
- Very high ductility structures: 0,2

6 Structural details of primary elements

6.1 General

Set out below are certain reinforcement arrangement and dimensional requirements which ensure high ductility behaviour for the various magnitudes of the seismic action, according to the available experimentation and the actual behaviour of structures subject to earthquakes.

The requirements for minimum dimensions or maximum quantities are generally established to prevent excessive concentration of reinforcements or inadequate execution of the zones with greatest structural responsibility.

The requirements for longitudinal reinforcements, as regards minimum quantities in sections and distribution throughout the element, are established bearing in mind, in the main, the reversibility of moments and the change in the stress laws throughout the element due to the assumed non-linear behaviour.

The requirements for transverse reinforcements are primarily established in order to confine the compressed concrete, prevent buckling of the compression reinforcement and increase the shear strength.

Finally, the general criteria for the anchoring conditions are established to take account of the deterioration in these loadbearing characteristics due to the action of alternating cyclic loads.

6.2 Beams

This section covers elements which fundamentally work by bending and which meet the following conditions:

- The reduced design axial compressive force, due to the seismic situation, complies with:

$$\frac{N_d}{A_c f_{cd}} \leq 0,10$$

- The width/depth ratio will not be less than 0,3.
- The span of the beam will not be less than four times the effective depth of the element.
- If there is a concrete top slab, the effective width of this will be as defined below. The reinforcement of the slab contained within this width forms part of the upper reinforcement of the beam and must therefore be taken into account for the purposes of the permitted maximum reinforcement ratio and the calculation of the shear stress by capacity-based design criteria.

    - For external beam-column nodes without transverse beams, this will be the column width.
    - For external beam-column nodes with transverse beams, this will be the column width plus double the slab depth on each side of the beam where there is a slab.
    - For internal beam-column nodes, the above widths may be increased to double the slab depth.

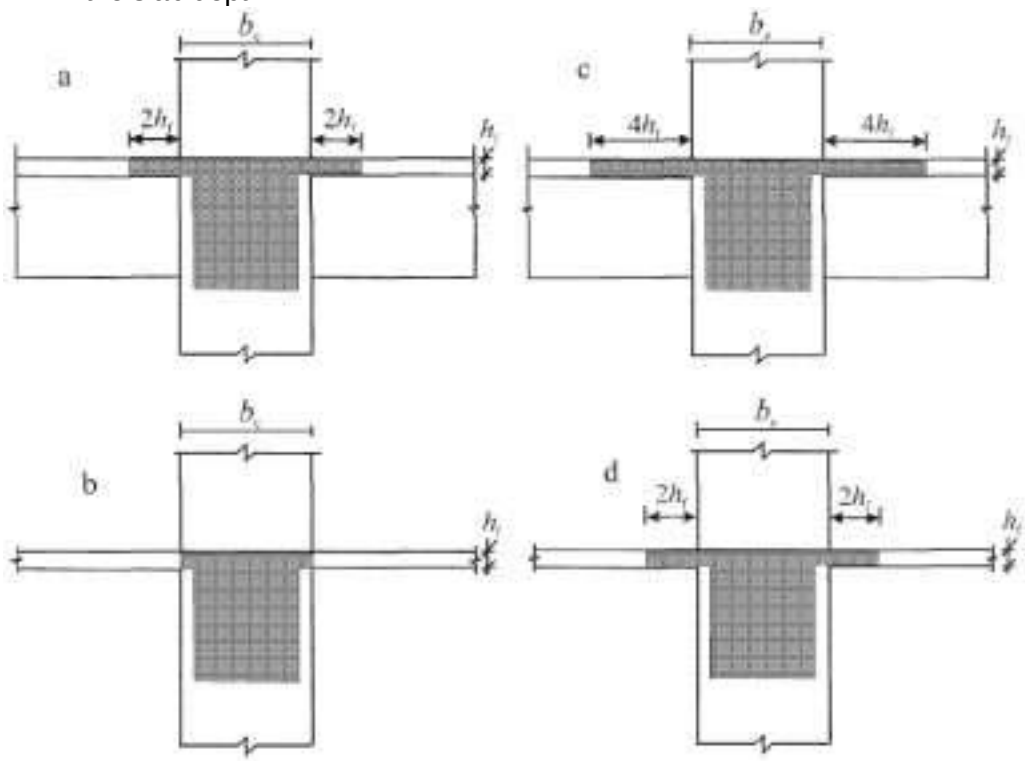

Figure A.10.4

With regard to the anchorage and overlap of reinforcements, the following indications shall be observed:

- The anchorage lengths of the reinforcements shall be increased by 10Ø with regard to those defined for static loads as indicated in the main articles of this Code for cyclic loads.
- The joints of the reinforcements will, as far as possible, be kept away from the zones close to the ends, by a length of double the beam depth, or from the zones where the formation of plastic hinges is anticipated.

The length of critical zones or those where plastic hinges are likely to form must be taken as:

- For frames with rigid nodes, double the beam depth measured from the face of the supporting elements to halfway along the span.
- Double the camber of the element on both sides of a section where the steel may plasticise under seismic loading conditions.
- For beams which support significant point loads, the zone situated directly below the load and double the beam depth on both sides of this.

Structural systems involving discontinuous pillars supported on lateral beams are not recommended in seismic areas. In all cases, these beams must be dimensioned with special care and the capacity-based design rules must be used. The vertical component of the seismic accelerations must be included in the structural analysis.

6.2.1 High ductility

General provisions for the whole beam:

- Beams must be set back from the slab edge. This set-back must be greater than the depth of the neutral fibre in the support zone under the negative failure moment. The width of the set-back must be at least 200 mm.
- Along its whole length there must be a longitudinal reinforcement of at least 2ϕ14 or 25% of the maximum reinforcement ratio of negative reinforcement in any section between supports. In all cases, the minimum quantity set in the main articles of this Code must be respected.
- The maximum reinforcement ratio under tension in any section of the beam shall be less than:

$$\rho_{\max} = \rho' + 72\frac{f_{cd}}{f_{yd}^2}\left[MPa\right]$$

- Transverse reinforcement of at least ϕ6 will be provided in the form of closed hoops set along the whole length of the beam. Their spacing will be no more than h/2.

Provisions to be met in critical zones of the beam where a plastic hinge may form:

- The compression reinforcement will be at least 50% of the tension reinforcement placed in the same section.
- The transverse reinforcement will be at least ϕ6 in the form of closed hoops. In the support zone, the first transverse reinforcement must be placed 50 mm from the support. The maximum spacing of this reinforcement must be less than:
    - d/4
    - 6 times the smallest diameter of the longitudinal reinforcement.

- 24 times the diameter of the hoop reinforcement.
- 200 mm

6.2.2 Very high ductility

General provisions for the whole beam:

- Beams must be set back from the slab edge. This set-back must be greater than the depth of the neutral fibre in the support zone under the negative failure moment. The width of the set-back must be at least 250 mm.
- Along its whole length there must be a longitudinal reinforcement of at least 2ϕ14 or 33% of the maximum reinforcement ratio of negative reinforcement in any section between supports. In all cases, the minimum reinforcement ratio set in the main articles of this Code must be respected.
- The maximum reinforcement ratio under tension in any section of the beam shall be less than:

$$\rho_{\max} = \rho' + 50\frac{f_{cd}}{f_{yd}^2}\left[N/mm^2\right]$$

- Transverse reinforcement of at least ϕ6 will be provided in the form of closed hoops set along the whole length of the beam. Their spacing will be no less than h/2.

Provisions to be met in critical zones of the beam where a plastic hinge may

- The compression reinforcement will be at least 33% of the tension reinforcement placed in the same section.
  - The transverse reinforcement will be at least ϕ6 in the form of closed hoops. In the support zone, the first transverse reinforcement must be placed 50 mm from the support. The maximum spacing of this reinforcement must be less than:
  - d/4
  - 8 times the smallest diameter of the longitudinal reinforcement.
  - 24 times the diameter of the hoop reinforcement.
  - 200 mm

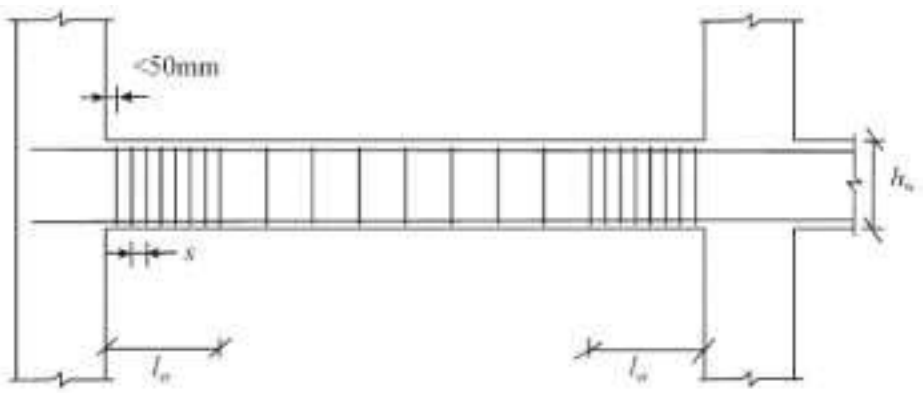

Figure A.10.5

6.3 Supports

This section covers elements which fundamentally work by compound compression and which meet the following conditions:

- The reduced design axial compressive force, due to the seismic situation, is:

$$\frac{N_d}{A_c f_{cd}} \geq 0{,}10$$

- The supports forming part of the primary earthquake resistance system, designed with a level of ductility other than essentially elastic, must meet the following condition for the design axial force:

$$\frac{N_d}{A_c f_{cd}} \leq 0{,}65$$

- The ratio between the largest and smallest dimensions of the rectangle in which the cross-section is inscribed must not exceed 2.5.

With regard to the anchorage and overlap of reinforcements, the following indications shall be observed:

- The anchorage lengths of the reinforcements shall be increased by 10Ø with regard to those defined for static loads as indicated in the main articles of this Code for cyclic loads.
- The joints of the reinforcements will, as far as possible, be kept away from the zones close to the ends or from the zones where the formation of plastic hinges is anticipated.

The zones contained within the plastic hinge lengths at both ends of a column must be regarded as critical zones. In the absence of more precise information, the length of the plastic hinges shall be taken as the maximum of the following values:

- the maximum dimension of the column cross-section
- 1/6 of the free length of the column
- 450 mm

If the free length of the column is less than 3 times the largest dimension of its cross-section, the whole column must be regarded as a critical zone and must comply with the corresponding minimum structural details.

6.3.1 General provisions

These provisions apply to any column forming part of a primary earthquake resistance system designed with a type of behaviour better than essentially elastic.

The reinforcement ratio of longitudinal reinforcement must not be less than 1% or more than 6%. If the cross-section is symmetrical, longitudinal reinforcement which is also symmetrical must be used.

The longitudinal reinforcement will consist of at least three bars in each face. In the case of circular sections, at least six bars in total must be used.

The transverse reinforcement will consist of closed hoops and, where applicable, additional bands of at least $\phi 6$. The arrangement of the transverse reinforcements will be such that this ensures effective confinement of the cross-section.

Throughout the critical zones there must be a minimum mechanical reinforcement ratio of transverse reinforcement with a value of:

$$\omega_{w.\,min} = 0{,}08$$

Outside the critical zones, transverse reinforcement of at least $\phi 6$ must be used with a spacing of not more than 15 times the diameter of the smallest longitudinal reinforcement or 150 mm.

In high or very high ductility structures, the provisions indicated below must also be observed.

6.3.2 Provisions for high ductility

The minimum section of the cross-section shall be 250 mm.

The maximum reinforcement ratio of longitudinal reinforcement shall be 4%.

The distance between longitudinal reinforcements shall not exceed 200 mm. Along the whole length of the column, transverse support must be provided for the longitudinal reinforcements using additional hoops or hooks, at least alternately and at the corner bars.

In critical zones where a plastic hinge may form, a reinforcement ratio of transverse reinforcement must be provided which is equal to or greater than:

$$\omega_{W,\min} = \frac{1}{\alpha}\left(\frac{\nu_d f_{yd}}{1333}\frac{b_c}{b_0} - 0{,}035\right)$$

where

$$\nu_d = \frac{N_d}{A_c f_{cd}}$$

b_c Width of the cross-section

b_0 Width of the confined core (measured between the central lines of the confining hoops).

α Confinement effectiveness factor, defined in Article 40.3.4 of this Code.

The maximum spacing between transverse reinforcements in critical zones shall be the smallest of the following values: $b_0/3$, 150 mm or 8 times the diameter of the smallest longitudinal reinforcement.

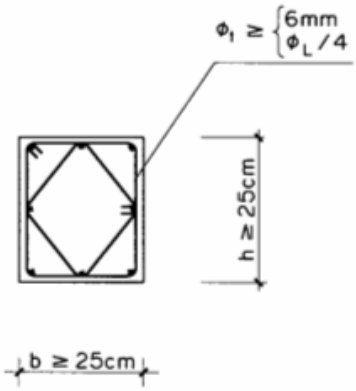

Figure A.10.6

6.3.3 Provisions for very high ductility

The minimum section of the cross-section shall be 300 mm.

The maximum reinforcement ratio of longitudinal reinforcement shall be 4%.

The minimum diameter of the transverse reinforcement shall be $\phi 8$.

The distance between longitudinal reinforcements shall not exceed 150 mm. Along the whole length of the column, transverse support must be provided for the longitudinal reinforcements using additional hoops or hooks, at least alternately and at the corner bars.

In critical zones where a plastic hinge may form, a reinforcement ratio of transverse reinforcement must be provided which is equal to or greater than:

$$\omega_{W,\min} = \frac{1}{\alpha}\left(\frac{\nu_d f_{yd}}{950}\frac{b_c}{b_0} - 0{,}035\right)$$

where the parameters of the formula have the same meanings as in the previous section.

The maximum spacing between transverse reinforcements in critical zones shall be the smallest of the following values: $b_0/4$, 100 mm or 6 times the diameter of the smallest longitudinal reinforcement.

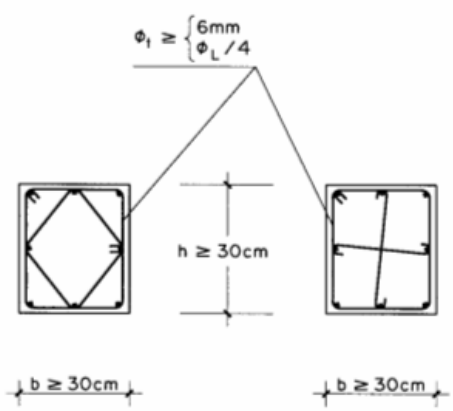

Figure A.10.7

6.4 Nodes

In order to check the coupling conditions, a strut and tie rod model must be used, defined in accordance with the general criteria in Article 24 and with the various elements being checked according to the indications in Article 40.

The beam-column nodes shall be dimensioned to withstand the shear stress determined according to the capacity-based design criteria as indicated in section 5 of this Annex. In addition, transverse reinforcement must be provided in order to ensure adequate confinement of the core to the concrete. This reinforcement shall be parallel to the horizontal reinforcement of the columns.

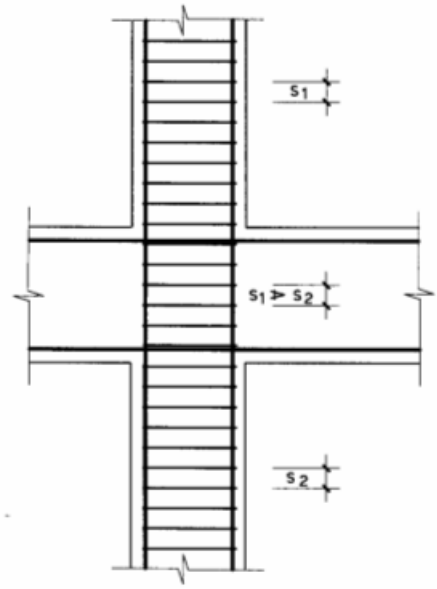

CONTINUOUS HOOPS
AT THE NODE

Figure A.10.8

In general, the transverse confinement reinforcement at the coupling shall not be less than that specified for the critical zones of the columns. As an exception, if the coupling receives beams on all four faces and the width of these is at least ¾ of the parallel dimension of the column, the spacing of the confinement hoops may be double that specified above, but never greater than 150 mm.

6.5 Core walls

This section covers highly rigid elements whose fundamental function is to withstand the horizontal stresses produced by the seismic action and which meet the following conditions:

- The minimum thickness of the core wall shall be 150 mm and no more than 5% of the clear height of the floor.
- The main reinforcement shall be placed in both faces.
- Core walls forming part of the primary earthquake resistance system, designed with a level of ductility other than essentially elastic, must comply with the following condition for the design axial force:

$$\frac{N_d}{A_c f_{cd}} \leq 0{,}40$$

- The geometric reinforcement ratio of longitudinal reinforcement shall be 4%.
- The stiffness conditions and therefore the dimensions shall not vary significantly through the height.
- Where there are openings, these shall be vertically aligned.
- With regard to the anchorage and overlap of reinforcements, the following indications shall be observed:

- The anchorage lengths of the reinforcements shall be increased by 10Ø with regard to those defined for static loads in the main articles of this Code.
- The groups of box-section core walls connected together on one floor forming L-, T-, U-, double-T or similar sections shall be regarded as integral units formed of webs and flanges.

The effective width of the flanges shall be taken from the edge of the webs over a length no greater than the actual length of the flange, half the distance between adjacent webs or 25% of the total height of the wall above the level in question. In all cases, the reduced axial force mentioned in this section shall be standardised with regard to the web of the cross-section.

The length of the critical zone where a plastic hinge may form shall be taken as the maximum value of the horizontal length of the core wall or the total height of the wall. However, the length of the critical zone shall not exceed double the horizontal length of the core wall, the clear height of the floor for buildings with 6 floors or less or double the clear height of the floor for buildings with more than 6 floors.

Where the reduced design axial force under the seismic action is equal to or greater than 0,15, the following mechanical reinforcement ratio of horizontal confinement reinforcement must be placed in the critical zone:

- in high ductility primary elements

$$\omega_{W,\min} = \frac{1}{\alpha}\left[\frac{(\nu_d + \omega_v) f_{yd}}{1333}\frac{b_c}{b_0} - 0{,}035\right]$$

- in very high ductility primary elements

$$\omega_{W,\min} = \frac{1}{\alpha}\left[\frac{(\nu_d + \omega_v) f_{yd}}{950}\frac{b_c}{b_0} - 0{,}035\right]$$

where:

ω_v Mechanical reinforcement ratio of vertical reinforcement in the web, standardised with regard to the web of the core wall.

This confinement must be placed at the ends of the core wall, in the form of hoops, at a horizontal distance (l_c) measured from the cover of the reinforcements to the point where the unconfined concrete may slip. This distance may be determined as:

$$l_c = x_u\left(1 - \frac{\varepsilon_{cu}}{\varepsilon_{cu,c}}\right)$$

where:

ε_{cu} Crushing strain of the concrete for the corresponding characteristic strength.

$\varepsilon_{cu,c}$ Crushing strain of the confined concrete which can be determined as: $\varepsilon_{cu,c} = \varepsilon_{cu} + 0{,}l\ \alpha\ \omega_w$, where α and ω_w are the parameters defined in Article 40.3.4.

X_u Depth of the neutral fibre at fracture after the unconfined concrete slips. In the absence of a rigorous calculation, this may be estimated as: [see original for equation], where b_0 is the width of the confined core of the core wall.

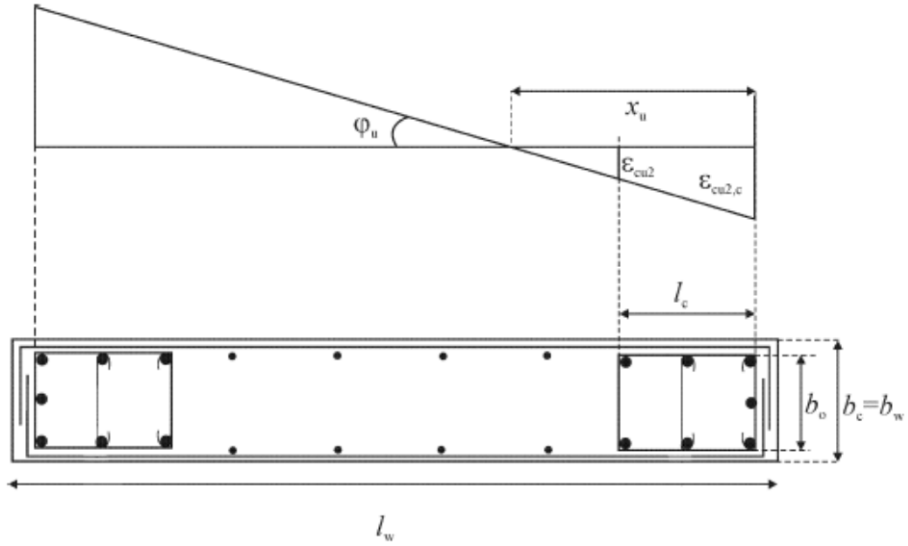

Figure A.10.9

In the confined edge zone, the reinforcement ratio of vertical reinforcement must not be less than 0,005. The thickness of the confined edge zone must not be less than 200 mm in general.

If the length lc does not exceed double the width of the confined zone or 20% of the horizontal length of the wall, the width of the confined zone shall also be more than 10% of the clear height of the floor.

If the length lc does exceed double the width of the confined zone or 20% of the horizontal length of the wall, the width of the confined zone shall also be more than 15% of the clear height of the floor.

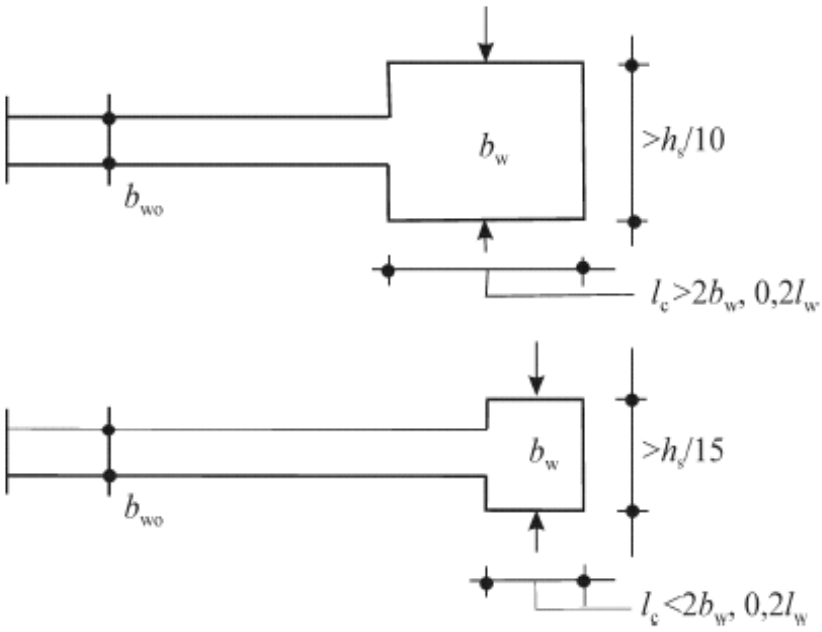

Figure A.10.10

6.6 Connecting elements between coupled core walls

This section covers lintel-type elements or edge beams which join, in their plane, two core walls at different heights. It is understood that these elements are sufficiently rigid to connect the deformation of the core walls in terms of both horizontal displacements and rotation. These elements must be taken into account in the structural model of the core wall. Slabs or floor slabs not contained within the plane of the core wall are not regarded as connecting elements.

These elements may be dimensioned as beams if their length is more than 3 times their depth or where inclined cracking under the seismic action is unlikely, which may be regarded as met if the following condition is satisfied:

$$V_d \leq f_{ctd} bh$$

where:

V_d Design shear stress under the seismic combination.
f_{ctd} Lower design tensile strength of the concrete.

Where the above criteria are not met, these elements must be dimensioned in accordance with the strut and tie rod criteria defined in accordance with the general criteria in Article 24 and with the various elements being checked according to the indications in Article 40.

The reinforcement of these elements must be arranged by forming two diagonals along the beam as shown in the following figure:

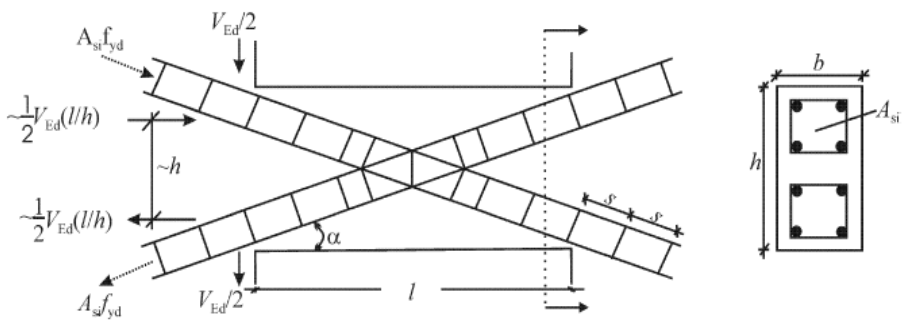

Figure A.10.11

The longitudinal reinforcement in each diagonal must meet the following condition:

$$V_d \leq 2A_{si}\, f_{yd}\, sen\ \alpha$$

where α is the inclination of the diagonals with regard to the horizontal and A_{si} is the area of longitudinal reinforcement in each diagonal.

The diagonals must be reinforced along similar lines to the columns in order to prevent their buckling. The dimension of the diagonal in the plane of the beam shall be at least 50% of the beam width. The anchorage length of the reinforcements must be increased by 50% with regard to that required in the main articles of this Code for static loads. Transverse reinforcement must be provided to prevent buckling of the compression reinforcements, as indicated in section 6.3 of this Annex.

In addition, vertical and horizontal reinforcements must be placed in both faces as laid down in the main articles of this Code for deep edge beams.

6.7 Horizontal diaphragms

Horizontal diaphragms may consist of concrete slabs or the compression layer of one-way or two-way floor slabs where their thickness is greater than or equal to 50 mm, where an intermediate reinforcement is provided in both directions and where an adequate link to the perimeter elements (beams or bands) is guaranteed.

For calculation purposes, diaphragms may be regarded as infinitely rigid elements in their plane, provided that the ratio between the largest and smallest dimensions in plan view is equal to or less than 4. If this ratio is not met throughout the whole floor slab or in any region of this, a more detailed analysis will be needed of the deformability of the floor slab and its effects on the distribution of the seismic action to the primary elements.

Horizontal diaphragms must be dimensioned in accordance with the strut and tie rod criteria defined in accordance with the general criteria in Article 24 and with the various elements being checked according to the indications in Article 40. It must be guaranteed that the diaphragm is capable of distributing the seismic stresses to the primary elements connected via this, by paying attention to the concentration of stresses produced in the opening zone and the possible directions of the seismic action.

The struts must be appropriately confined, using criteria similar to those used for high ductility columns, unless the compression of these is less than $0,15\ f_{cd}$ under the design seismic action. If longitudinal reinforcement is required in the compressed struts, appropriate measures must be adopted to prevent buckling of the longitudinal reinforcements as indicated in section 6.3 of this Annex.

For diaphragms formed of precast slabs, the capacity of the longitudinal joints to transmit the shear stress produced in the plane of these must be checked, with the diaphragm being regarded as a beam supported on the elements of the primary system. This shear stress may be withstood using reinforcement which crosses the joint transversely and is anchored in the precast elements (the joint must subsequently be concreted) or using the transverse reinforcement of the site-cast top slab (where this exists).

In the latter case, the top slab must be at least 70 mm thick. The surface of the precast slab on which the top slab is concreted must be rough and clean or there must be shear connectors.

Likewise, the capacity of precast diaphragms to transmit the seismic stresses to the primary elements must be checked.

6.8 Foundation elements

If the design stresses of the foundations are determined using capacity-based design criteria, no significant dissipation of energy in these elements will be expected and therefore a special detailed study will not be required to guarantee a level of ductility. Otherwise, foundation elements must meet the same requirements as indicated above.

In all cases, the solution adopted for the foundations must comply with the following criteria:

- The coexistence of different foundation solutions in one structural unit, understood as the part of the structure separated from the rest by a joint along its whole height, must be avoided.
- If the supporting ground is not generally uniform, the foundations shall be divided into different structural units.
- If liquefaction is likely, superficial foundations must be avoided.
- The end of deep foundations must be below the liquefiable layers.
- Tie elements must be placed under the primary elements in both directions, at the base of tie beams and at the footing height, thus avoiding the formation of short pillars. The minimum dimensions of the tie beams shall be 250 mm for the base and 400 mm for the depth, for structures with up to 3 floors above the basement, or 500 mm for the

depth for higher structures. The axial force which is produced due to the horizontal action must be taken into account.

- If the design acceleration is less than 0,16 g, the tie may be at the base of a foundation slab provided that its depth is at least 150 mm or 1/50 of the distance between pillars.

6.9 Precast elements and joints

Precast beams and supports must meet the requirements indicated in sections 6.1 and 6.2 of this Annex, bearing in mind the actual link between the elements when determining the critical regions.

For frames with rigid couplings, the adequate transmission of moments in positive and negative directions through the joints and embedded supports with an adequate strength must be guaranteed. The design stresses must be determined in accordance with the capacity-based design principles.

If the joint between elements is located within a critical region, this must be over-dimensioned, in accordance with the capacity criteria, in order to guarantee that this does not plasticise, unless it is proven that the joint forms a device with sufficient ductility and energy dissipation capacity and has been considered as such in the design. In all cases, the premature collapse of the joint must be prevented using capacity-based design criteria.

For core walls formed of precast elements, the capacity to transmit the shear stresses produced in the plane of this must be checked using provisions similar to those indicated for horizontal diaphragm joints in section 6.6 of this Annex.

For horizontal diaphragms formed of precast elements, the provisions indicated in section 6.6 of this Annex must be met.

7 Anchorage of reinforcements

Reinforcements must be anchored as indicated in Article 68 of this Code. It should be remembered that, under seismic stresses, the anchorage of reinforcements must be increased by 10ϕ with regard to the value given for static loads.

ANNEX 11

Tolerances

1 Specifications of the System of Tolerances

The system of tolerances adopted by the Designer must be clearly indicated in the Project Specific Technical Specifications, either by reference to this Annex or supplemented or modified as appropriate.

2 Terminology

The essential terminology is indicated below.

a) Warping. Deviation of the actual position of any corner of a face of a flat element from the plane defined by the other three corners (Figure A.11.2.a).

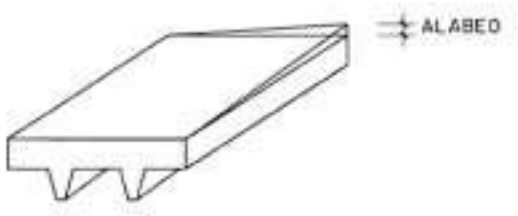

WARPING

Figure A.11.2.a

b) Bowing. Deviation of the position of any point on the actual surface of a theoretically flat element from the basic flat surface (Figure A.11.2.b).

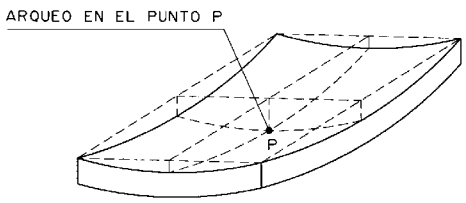

BOWING AT POINT P

Figure A.11.2.b

c) Ridge (Flange). Projection at the joint between the edges of two adjacent members.
d) Leaning. See j).
e) Deviation. Difference between the actual dimension or actual position and the basic dimension or basic position, respectively.
f) Permitted deviation. Accepted limit for deviation, with its sign (Figure A.11.2.c).
g) Deviation in level. Vertical deviation of the actual position of a point, straight line or

plane from the basic position of a horizontal reference plane.

h) Lateral deviation. Deviation of the actual position of a point or straight line within a horizontal plane from the basic position of a reference point or straight line situated in that plane.

i) Relative deviation. Deviation between the actual positions of two elements in a plane, or between adjacent elements in a structure, or the distance from a point, straight line or plane to a reference element.

j) Deviation from the vertical. Deviation between the position of a point, line or plane and the basic position of a reference vertical line or vertical plane. When applied to walls or pillars, this is known as leaning.

k) Basic dimension or basic position. Dimension or position serving as a reference for establishing the limits of deviation (Figure A.11.2.c).

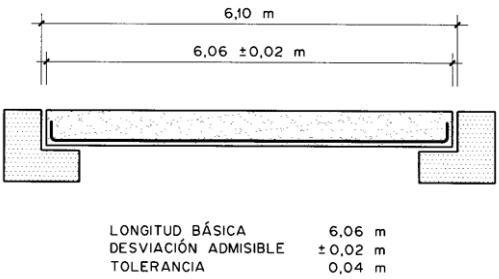

BASIC LENGTH
PERMITTED DEVIATION
TOLERANCE

Figure A.11.2.c

l) Flatness. The degree by which a surface approximates a plane (Figure A.11.2.d).

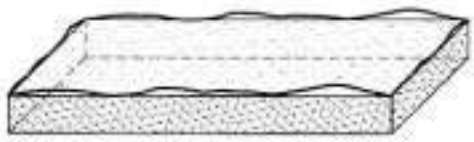

Figure A. 11.2.d

m) Straightness. The degree by which a line approximates a straight line (Figure A.11.2.e).

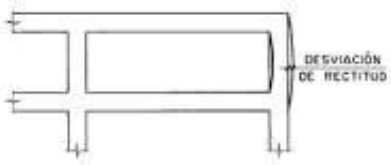

DEVIATION FROM STRAIGHTNESS

Figure A.11.2.e

n) Hidden surface. The surface of a concrete element intended to be covered with plaster, mortar, boards, etc., or which will not be observed by the user during the working life of the structure.

ñ) Exposed surface. The surface of a concrete element which will not be covered, except with paint, and which will be observed by the user during the working life of the structure.

o) Tolerance. The difference between the permitted limits for the deviations of a dimension or position (Figure A.11.2.c). Tolerance is an absolute value without a sign.

For example, for permitted deviations of +30 mm and -20 mm, the tolerance is 50 mm.

3 Selection of the system of tolerances

The tolerances adopted in a design should be as wide as possible but must always be compatible with the due functioning of the structure. Tolerances which do not need to be checked for the purpose of this functioning should not be set.

The system included in this Annex is appropriate for the usual types of concrete structure. For certain specific deviations, several permitted deviations are indicated depending on the types of use or levels of finishing. In all cases, their adaptation to each specific design may require selected modifications.

4 General principles

a) Tolerances are applied to the dimensions indicated in the drawings. Double dimensioning must be avoided, but, in principle, if several tolerances correspond, in the system described in this document, to one dimension or position, the strictest tolerance shall be understood as applying, unless otherwise indicated.

b) The structure must not under any circumstances exceed the limits of the property, regardless of the deviations indicated in this Annex.

c) In the case of fractional dimensions which form part of a total dimension, the tolerances must be interpreted individually and not accumulatively.

d) Checks must be made before removing timbering, shoring and formwork from those elements in which this operation could cause deformations.

e) The Constructor must maintain the references and marks allowing the deviations to be measured while the structure is being executed.

f) The values of the permitted deviations must be chosen from the preferred series of 10, 12, 16, 20, 24, 30, 40, 50, 60, 80 and 100.

g) If the set tolerances have been met, the elements shall be measured and paid for using the basic dimensions indicated in the drawings, i.e. without taking into account the deviations which have occurred during execution.

h) If the deviations indicated in this document are exceeded in the structure and could cause problems in its use, the financial penalties laid down for this purpose in the project technical specifications may be applied. However, the acceptance or rejection of the corresponding part of the structure must be based on the study of the effect that these deviations may have on the safety, functionality, durability and appearance of the structure.

5 Permitted deviations

These are always indicated in mm.

5.1 Reinforcements

5.1.1 Passive reinforcements

a) For the cut lengths and bent bars:

For $L \leq 6000$ *mm*
Δ *=-20mm y +50mm*

For $L > 6000$ *mm*
Δ *=-30mm y +50mm*

Being *L* the straight length of the passive reinforcement bars.

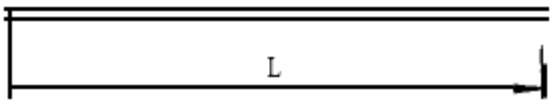

Figure A.11.5.1.1.a1

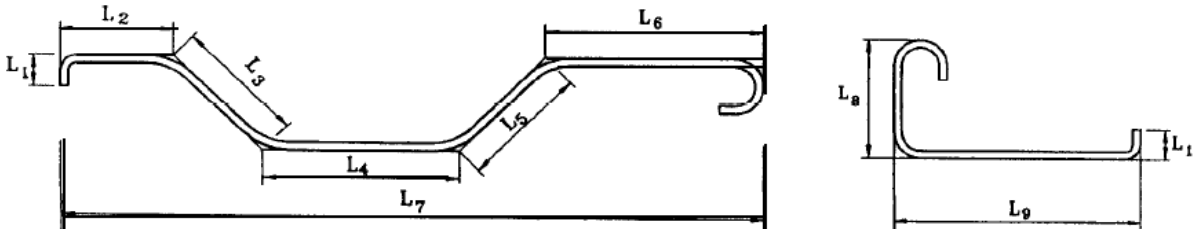

Figure A.11.5.1.1.a2

Moreover, the minimum concrete cover specified in the design and the overlapping lengths defined in this Code must always be guaranteed, being allowed to exceed the +50mm tolerance.

b) For stirrups and hoops:

For $\varnothing \leq 25$ *mm*
$\Delta L = \pm 16$*mm*

For $\varnothing > 25$ *mm*
ΔL*=-24mm y +20mm*

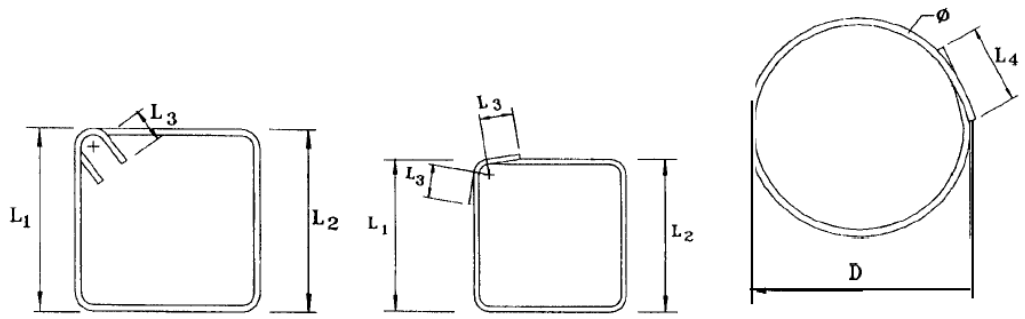

Figure A.11.5.1.1.b1

Being *L* the length as in figure A.11.5.1.1.b.

Likewise, $/L_1\text{-}L_2/ \leq 10mm$

c) For the basic position of the axis in parallel bar series, in walls, in slabs, in ground plates, etc:

$\Delta = \pm 50mm$
and the total number of bars being never lower than the specified one.

d) For the basic position of stirrups and hoops

$\Delta = \pm b/12\ mm,$

Being *b* the smaller dimension o f the rectangular section in the pillar or the depth or width of the beam.
Likewise, the number of stirrups and hoops in the structural element stretch never shall be diminished.

e) For the bending angle in hooks, bents, hooks in U and other curved bars.

$\Delta = \pm 5^o$ regarding the design angle

Moreover, the minimum concrete cover specified in the design and the overlapping lengths defined in this Code must always be guaranteed, being allowed to exceed the +50mm tolerance.

5.1.2 Active reinforcements

a) With regard to the position of prestressing tendons, in comparison with the position defined in the design:

For $l \leq 200\ mm$
For tendons which are part of a cable, single tendons and strands: $\Delta = \pm 0{,}025l$
For $l > 200\ mm$
For tendons which are part of a cable and for single tendons: $\Delta = \pm 0{,}025l$ or $\Delta = \pm 20\ mm$ (whichever is greater).
For strands: $\Delta = \pm 0{,}04l$ or $\Delta = \pm 30\ mm$ (whichever is greater).

where *l* indicates the depth or width of the cross-section.

b) Tolerances other than those defined in paragraph a) may be used if it is proven that these do not reduce the required level of safety.
c) Tolerances for concrete cover. The deviation of the cover shall not exceed the following values:

±5 mm in precast elements
±10 mm in site-cast elements

5.2 Foundations

a) Horizontal variation of the centre of gravity of isolated foundations (see f) for piles) (Figure A.11.5.2.a)

2% of the dimension of the foundation in the corresponding direction, without exceeding ±50 mm.

b) Levels
- Upper face of blinding concrete
  +20 mm
  -50 mm
- Upper face of foundation (see g) for piles)
  +20 mm
  -50 mm
- Thickness of blinding concrete
  -30 mm

c) Horizontal dimensions *(a_1-a* or *b_1-b)* (Figure A.11.5.2.b).
- Formwork-cast foundations
  +40 mm
  -20 mm

- Foundations cast against the ground
  Dimension no greater than 1 m
  +80 mm
  -20 mm

  Dimension greater than 1 m but no greater than 2,5 m
  +120 mm
  -20 mm

  Dimension greater than 2,5 m
  +200 mm
  -20 mm

d) Dimensions of the cross-section (at least those set in paragraph 5.3.d)
+5% >/ 120 mm
-5% </ 20 mm

e) Flatness.
Deviations measured after hardening and within 72 hours of the concrete being placed, using a 2 m rule placed on any part of the upper face of the foundation and supported on any two points (not applicable to elements with a dimension less than 2 m).
Of blinding concrete:
±16 mm

Of the upper face of the foundation:

±16 mm

Of side faces (only for formwork-cast foundations):

±16 mm

f) Horizontal deviation of the centre of gravity of the upper face of a pile

Limited execution control:

±150 mm

Normal execution control:

±100 mm

Intensive execution control:

±50 mm

g) Deviation in the level of the upper face of a pile, once the head has been uncover

-60 mm

+30 mm

h) Deviation in the diameter *d* of the pile section

+0,1*d* >/ +100 mm

-20 mm

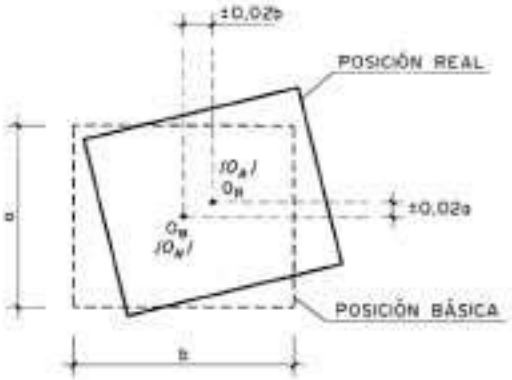

ACTUAL POSITION

BASIC POSITION

Figure A.11.5.2.a

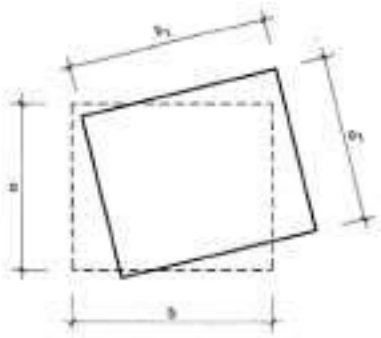

Figure A.11.5.2.b

5.3 Site-cast structural elements of buildings

a) Deviation from the vertical

Where *H* is the height of the point in question from the horizontal plane taken as the reference.

a-1) Lines and surfaces in general (Δ in mm for *H* in m)

H ≤ 6 m	$\Delta = \pm 24$ mm	
6 m < *H* ≤30 m	$\Delta = \pm 4H$	$\not> \pm 50$ mm
H ≥ 30 m	$\Delta = \pm 5H/3$	$\not> \pm 150$ mm

a-2) Outer edge of pillars with exposed corners and exposed vertical expansion joints (Δ in mm for *H* in m)

H≤6 m	$\Delta = \pm 12$ mm	
6 m<*H*≤30 m	$\Delta = \pm 2H$	$\not> \pm 24$ mm
H≥30 m	$\Delta = \pm 4H/5$	$\not> \pm 80$ mm

b) Lateral deviations

- Members in general

Δ = ±24 mm

- Voids in slabs and floor slabs. Deviation from the centre for voids with a dimension in the direction in question up to 30 cm
  Δ = ±12 mm

- Voids in floor slabs. Deviation from the edges for voids with dimensions in the direction in question greater than 30 cm
  Δ = ±12 mm

- Joints in general
  Δ = ±16 mm

c) Deviations in level

c-1) Upper face of slabs

c-1.1) Upper face of pavement slabs
±20 mm
c-1.2) Upper face of slabs and floor slabs, before removing shoring
±20 mm
c-1.3) Formwork-cast lower face of members, before removing shoring
±20 mm
c-1.4) Lintels, parapets and gutters and also exposed horizontal projections
±12 mm

d) Dimensions of the cross-section
Squareness of beams, pillars and piers, depth of slabs and floor slabs, and thickness of walls (Dimension *D*)
$D \leq 30$ cm
+10 mm
-8 mm
30 cm< $D \leq 100$ cm
+12 mm
-10 mm
100 cm<D
+24 mm
-20 mm

e) Relative deviation
e-1) Staircases (applicable to staircases in which the steps are made from the concrete itself, without any covering material).
Difference in height between consecutive risers:
3 mm
Difference in width between consecutive treads:
6 mm
e-2) Gutters and projections
Basic width less than 50 mm
±3 mm
Basic width between 50 and 300 mm
±6 mm
e-3) Deviation of the formwork-cast face of elements from the theoretical plane, in 3 m
e-3.1) Deviation from the vertical of outer edges of exposed pillars and joints in exposed concrete
±6 mm

e-3.2) Other elements

± 10 mm

e-4) Relative deviation between consecutive panels of formwork for surface elements (the corresponding Class must be selected in the design)

Class A surface

±3 mm

Class B surface

±6 mm

Class C surface

±12 mm

Class D surface

±24 mm

e-5) Flatness of the finish of pavement slabs, slabs and floor slabs

Vertical deviation measured using a 3 m rule placed on any part of the slab or floor slab and supported on two points, before removing the shoring, after the concrete has hardened and within the first 72 hours after placing.

Surface finish:

Mechanical flattening (rotary type)

±12 mm

Screeding using a float

±8 mm

Smooth

±5 mm

Very smooth

±3 mm

With regard to the flatness of the finish, tolerances must not be set for not scaffolded slabs and floor slabs as the shrinkage and deflection may significantly affect the measurement of the deviations.

The rule method is very imperfect and nowadays tends to be replaced by the statistical evaluation of flatness and leveling measurements.

f) Openings in elements

f-1) Dimensions of the cross-section

+24 mm

-6 mm

f-2) Location of the centre

±12 mm

5.4 Precast members (not applicable to precast piles)

In general, for precast elements which have CE marking, the required tolerances will be those set in the corresponding harmonised European product standard. The tolerances set in paragraphs 5.4.1, 5.4.2 and 5.4.3 will only apply in the case of elements without CE marking.

5.4.1 Manufacturing tolerances of linear elements

a) Length of member, L

$\pm 0{,}001\ L$

With a minimum of 5 mm for lengths up to 1 m and 20 mm for longer lengths.

b) Transverse dimensions, D

$D \leq 150$ mm

±3 mm

150 mm$<D\leq$500 mm

±5 mm

500 mm$<D\leq$1000 mm

±6 mm

D>1000 mm
±10 mm

c) Lateral deflection, measured from the vertical plane containing the axis of the member, shall not exceed L/750. In addition, depending on the span L, the following must be met:
$L \leq 6$ m
±6 mm
6 m<$L \leq 12$ m
±10 mm
L>12 m
±12 mm

d) Deviation of the camber from the basic design value, measured during assembly
- Members in general

$\pm \frac{L}{750}$ with a limit value of 16 mm

- Consecutive members during placing

$\pm \frac{L}{1000}$ with a limit value of 12 mm

Where L is the length of the member. The second condition only applies where the deviation affects the aesthetic appearance.

e) Flatness of the surface of the upper face. Deviation measured using a 3 m rule placed on any two points, during assembly.

e-1) If the elements do not have to receive a site-cast concrete top slab
±6 mm
e-2) If the elements do have to receive a site-cast concrete top slab
±12 mm

5.4.2 Manufacturing tolerances of surface elements

a) Length, where L is the basic dimension

L≤6 m
±8 mm
6 m<$L \leq 12$ m
+12 mm
-16 mm
L>12 m
+16 mm
-20 mm

b) Deviations in the dimensions of the cross-section (D)
$D \leq 60$ cm
±6mm

60 cm<$D \leq 100$ cm
±8 mm
D>100 cm
±10 mm

c) Openings in panels
Dimensions at the opening
±6 mm

Position of the central lines of the opening
±6 mm

d) Embedded elements
Screws
±6 mm
Welded plates
±24 mm
Anchorages
±12 mm

e) Warping measured during assembly
±5 mm per metre of distance to the closest of the adjacent corners, but no more than ±24 mm.

f) Bowing (where *D* is the length of the diagonal of the member)
±0,003*D* with a limit value of 24 mm

5.4.3 Assembly deviations

a) Deviations from the vertical: paragraph 5.3.a applies.
b) Lateral deviations: paragraph 5.3.b applies.
c) Deviations in level: paragraph 5.3.c applies.
d) Deviations in panel walls

d-1) Width of joint at exposed panels
±6 mm

d-2) Variation in width along the joint between two exposed panels:
±2 mm per metre and at least ±1,5 mm between any two points along the joint, without exceeding ±6 mm under any circumstances

d-3) Flanges between two adjacent panels
if $L \leq 6$ m ±6 mm
if 6 m$<L\leq$9 m ±12 mm
if 9 m$<L\leq$12 m ±24 mm

e) Deviation in level between edges of upper faces of adjacent members

e-1) If they are to receive a top slab
±16 mm

e-2) If they are not to receive a top slab
±6 mm

e-3) Roof members without any top slab
±16 mm

e-4) Elements with functions as guides or screeds
±2 mm

f) Placement of loadbearing and semi-loadbearing joists in floor slabs

f-1) Deviation of the flooring block support on a beam, d_1
(Figure A.11.5.4.3.a)
±5 mm with a limit value of $d_1/3$
measured with regard to the basic dimension indicated in the Authorisation for Use.

In practice, it is easier to control this permitted deviation by controlling the deviation of the distance between beam axes, limited to

$$\pm 10 \text{ mm} >/ \pm \frac{2d_1}{3}$$

f-2) Bearing of beams or reinforcements projecting from beams (Figure A.11.5.4.3.b).

Edge beams (Length L_1)

±15 mm

Inner beams (Length L_2)

±15 mm

f-3) Thickness of top slab, measured by submerging a nail in the fresh concrete, at a flooring block bonding key. The position of the bonding key is determined by feeling with the nail.

-6 mm

+10 mm

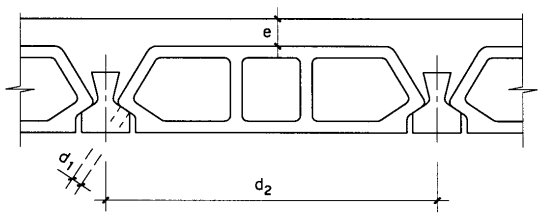

Figure A.11.5.4.3.a

Figure A.11.5.4.3.b

5.5 Core walls, cores, towers, chimneys, piers and other elements concreted using slipforms

a) Deviation from the vertical. Horizontal slippage from the basic position of any reference point at the base of the element, depending on the height *H.*

$H \leq 30$ m	$\Delta = \pm 1{,}5H$	with a limit value of 12 mm
$H > 30$ m	$\Delta = \pm \frac{2}{5} H$	with a limit value of 100 mm

where Δ in mm and H in m

b) Lateral deviation between adjacent elements

±50 mm

c) Thickness of internal and external walls

Thickness no greater than 25 cm

+12 mm

-10 mm

Thickness greater than 25 cm

+16 mm

-10 mm

d) Relative deviation of formwork-cast flat surfaces

These may deviate from the basic flat position without exceeding ±6 mm in 3 m.

5.6 Retaining walls and basement walls

a) Deviation from the vertical. Horizontal slippage of any point of the elevation from the basic position of any reference point situated on the upper face of the foundation, depending on the height *H.*

$H \leq 6$ m

Extrados

±30 mm

Intrados

±20 mm

$H > 6$ m

Extrados

±40 mm

Intrados

±24 mm

b) Thickness *e*:

$e \leq 50$ cm

+16 mm

-10 mm

$e > 50$ cm

+20 mm

-16 mm

For walls concreted against the ground, the maximum deviation will be +40 mm.

c) Relative deviation of the flat intrados or extrados surfaces.

These may deviate from the basic flat position without exceeding ±6 mm in 3 m.

d) Deviation in level of the upper edge of the intrados, for exposed walls:

±12 mm

e) Finishing tolerance of the upper face of the elevation, for exposed walls:

±12 mm using a 3 m rule supported on any two points, once the concrete has hardened.

5.7 Hydraulic and sanitary works

5.7.1 Channels

a) Lateral deviation

Straight sections

±50 mm

Curved sections

±100 mm

b) Width of the section at any level, where *B* is the basic width:

$\Delta = \pm(2{,}5B+24)$ mm

with Δ in mm for *B* in metres

c) Deviation in level

c-1) Floor

±12 mm

c-2) Top of side walls where *H* is the total depth

$\Delta = \pm(5H+24)$ mm

with Δ in mm for *H* in metres

d) Thickness *e* of floors and side walls

±*e*/10, provided that the basic value is maintained, determined as the average of the measurements at any three points which are 10 m apart along the channel.

5.7.2 Drains, siphons, etc.

a) Lateral deviation

a-1) Axis line

±24 mm

a-2) Position of points on the inner surface, where *D* is the maximum internal dimension:

$\Delta = \pm 5D$ mm with a limit value of 12 mm

with Δ in mm for *D* in m

b) Deviation in level

b-1) Floors or bottoms

±12 mm

b-2) Surfaces of side walls ±12 mm

c) Dimension *e* of the thickness

$e \leq 30$ cm

+0,05*e*</12 mm

-8 mm

$e > 30$ cm

+0,05*e*</16 mm

-0,025*e*>/-10 mm

5.8 Site-cast bridges and similar structures (for slip piers, see 5.5)

a) Deviation from the vertical

Exposed surfaces

±20 mm

Concealed surfaces

±40 mm

b) Lateral deviation

Axis

±24 mm

c) Deviation in level

Upper face of concrete surfaces and horizontal mouldings and channels

Exposed

±20 mm

Concealed

±40 mm

d) Flatness of paving

Longitudinal direction

3 mm using a 3 m rule supported on any two points, once the concrete has hardened and within 72 hours of placing.

Transverse direction

6 mm using a 3 m rule supported on any two points, once the concrete has hardened and within 72 hours of placing.

e) Pavements and ramps

In any direction:

6 mm using a 3 m rule supported on any two points, once the concrete has hardened and within 72 hours of placing.

f) Dimensions of the cross-section

f-1) Thickness *e* of the top slab

$e \leq 25$ cm

+10 mm

-8 mm

$e > 25$ cm

+12 mm

-10 mm

f-2) Transverse dimensions, *D*, of piers, beams, walls, stirrups, etc.

$D \leq 30$ cm

+10 mm

-8 mm

30 cm$< D \leq$100 cm

+12 mm

-10 mm

$D >$100 cm

+16 mm

-12 mm

f-3) Dimensions of voids in concrete elements

±12 mm

g) Relative deviation

g-1) Position of voids in concrete elements

±12 mm

g-2) Formwork-cast flat surfaces with regard to the basic position of the plane. Deviations in 3 m.

Exposed surfaces

±12mm

Concealed surfaces

±24 mm

g-3) Surfaces not cast in formwork, apart from paving and pavements, with regard to the basic position of the reference plane. Deviations:

In 3 m

±6 mm In

6 m

±10 mm

5.9 Paving and pavements (not applicable to roads)

a) Lateral deviations

a-1) Position of tie rods. Deviation from the axis
±24 mm

a-2) Deviation of tie rods from the axis of the paving (slippage of the end of the tie rod in the direction of the joint)
±6 mm

b) Flatness deviations

b-1) In the longitudinal direction:
3 mm using a 3 m rule supported on any two points, once the concrete has hardened and within 72 hours of placing.

b-2) In the transverse direction:
6 mm using a 3 m rule supported on any two points, once the concrete has hardened and within 72 hours of placing.

b-3) Pavements and ramps. In any direction:
6 mm using a 3 m rule supported on any two points, once the concrete has hardened and within 72 hours of placing.

5.10 Civil works, involving very thick elements, not included in other sections

a) Deviation from the vertical
Exposed surfaces
±30 mm
Hidden surfaces ±50 mm

b) Lateral deviation
Exposed surfaces
±30mm
Hidden surfaces
±50 mm

c) Deviation in level
Exposed surfaces, floated or formwork-cast
±12 mm
Hidden, floated or formwork-cast
±24 mm

d) Relative deviation

d-1) Formwork-cast flat surfaces with regard to the basic position of the plane. Deviations in 3 m.
Exposed surfaces
±12 mm
Concealed surfaces
±24 mm

d-2) Surfaces not cast in formwork, apart from pavements and sidewalks, with regard to the basic position of the reference plane. Deviations:
In 3 m
±6 mm
In 6 m
±10 mm

6 Applicable tolerances for reducing the partial safety factors for materials

6.1 Site-cast structures

In accordance with the criteria defined in Article 15.3.1 of this Code, the partial safety factor for steel may be reduced to the value indicated in this section, provided that it is ensured that the geometric deviation in the position of the reinforcement (Δc) is within the limits given in Table A.11.6.1.a.

Table A.11.6.1.a

Limit of the deviation in the position of reinforcements

Dimension h or b (mm)	Position of the reinforcement $\pm\Delta c$ (mm)
≤ 150	5
400	10
≥ 2500	20

Note 1: The intermediate values may be determined by linear interpolation.

Note 2: Δc refers to the mean value determined for passive reinforcements or for prestressing tendons in the cross-section or in a width of 1.0 m in the case of slabs or walls.

Likewise, in accordance with the criteria defined in Article 15.3.2 of this Code, the partial safety factor for concrete may be reduced to the value indicated in paragraph 3, provided that it is ensured that the geometric deviations in the cross-section (Δh, Δb) from the nominal dimensions are within the limits given in Table A.11.6.1.b.

Table A.11.6.1.b

Limit of the geometric deviations in the loadbearing section

Dimension h or b (mm)	Cross-section $\pm\Delta h$, Δb (mm)
≤ 150	5
400	10
≥ 2500	30

Note 1: The intermediate values may be determined by linear interpolation.

6.2 Precast elements

The rules laid down in section 6.1 for site-cast structures also apply to precast elements as defined above.

In the specific case of precast elements, the partial safety factor for concrete may be reduced as laid down in Article 15.3.2 of this Code if the loadbearing capacity of the section is calculated using either the actual values measured in the finished structure or a reduced loadbearing section with critical geometric dimensions determined from the nominal values reduced by the deviations contained in section 6.1 of this Annex.

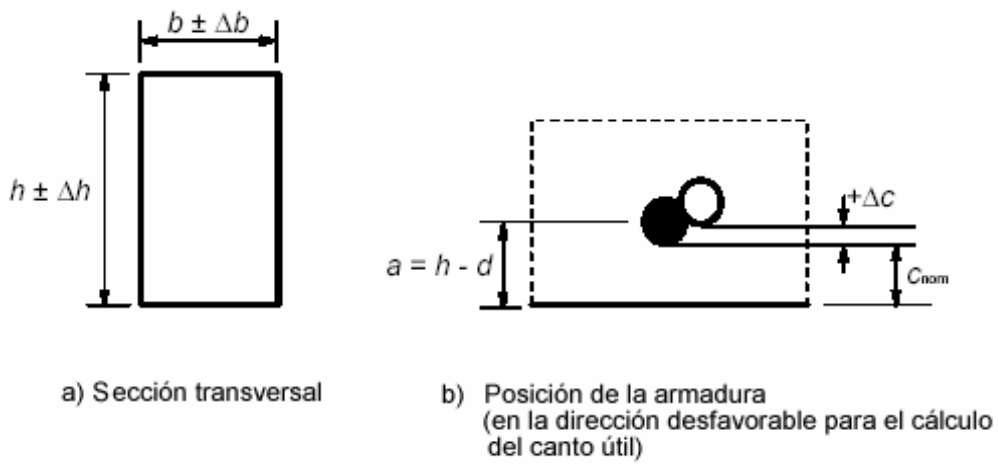

a) Cross-section b) Position of the reinforcement
(in the unfavourable direction for calculating
the effective depth)

Figure A.11.6.2. Reduced load bearing section

ANNEX 12

Specific construction and calculation aspects of one-way floor slabs with precast beams and hollow-core slabs

1 Scope

This Annex aims to provide additional rules on the construction and calculation aspects of one-way floor slabs consisting of precast elements and site-cast concrete.

2 Definition of the constituent elements of a floor slab

- Joist: loadbearing longitudinal element, precast at a permanent facility off site, designed to support loads produced on floor slabs for intermediate floors or roofs. They may be reinforced or prestressed.
- Prestressed hollow-core slab: flat surface element made of prestressed concrete, precast at a permanent facility off site, lightened by means of longitudinal voids and designed to support loads produced on floor slabs. The side joints are specially designed so that, once filled with concrete, they can transmit the shear stresses to adjacent slabs.
- Infill block: precast element made of brick, concrete, expanded polystyrene or other suitable materials, with a lightening or collaborating function, intended to form part, together with the beams, site-cast top slab and structural reinforcements, of the loadbearing assembly of a floor slab.
- Concrete top slab: element formed of site-cast concrete and reinforcements, intended to distribute the various loads applied to the floor slab and other additional functions as required (diaphragm action, bracing and tying, strength through the formation of a compound section, among others).

3 Types of floor slab

3.1 Joist floor slab

Construction system consisting of:

a) precast concrete or concrete and brick joists, reinforced or prestressed,
b) infill blocks whose function may be to lighten the structure or collaborate in providing strength,
c) structural reinforcements, whether longitudinal, transverse or intermediate, placed prior to concreting, and
d) site-cast concrete for filling ribs and forming the top slab of the floor slab.

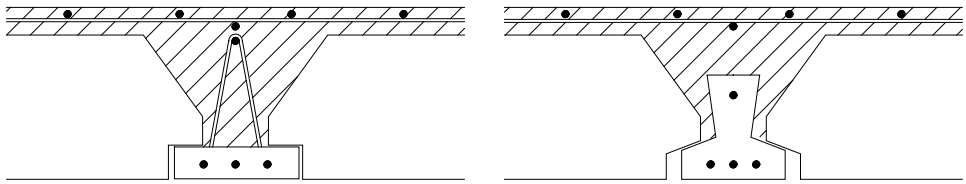

FORJADOS DE VIGUETAS ARMADAS FORJADOS DE VIGUETAS PRETENSADAS

FLOOR SLABS WITH REINFORCED BEAMS FLOOR SLABS WITH PRESTRESSED BEAMS

Figure A.12.3.1 Usual types of joist floor slabs

3.2 Prestressed hollow-core floor slab

Construction system consisting of:

a) precast hollow-core slabs made of prestressed concrete,
b) site-placed reinforcement, where applicable, and
c) site-cast concrete for filling side joints between slabs and forming the top slab, where applicable, in accordance with Article 59.2.1 of this Code.

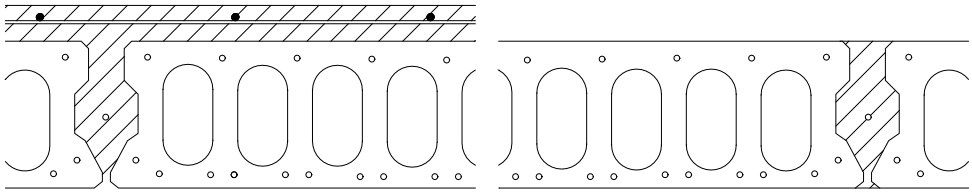

Figure A.12.3.2 Usual types of prestressed hollow-core floor slabs

4 Simplified method for redistributing stresses in floor slabs

The stresses with the maximum permitted redistribution for floor slabs can be determined using the simplified method set out below. In the basic graph of the maximum bending moment of each section (Figure A.12.4.a), the moments for the total load according to the following criteria are calculated:

- in the end stretches, a moment will be taken as equal to the moment of its internal support (M_1 or M_3);
- in the intermediate stretches, a moment will be taken as equal to the moment of both supports (M_2);
- in the end support, a moment will be taken as zero if there is no cantilever and, if there is, as the moment due to the permanent loads on this cantilever (M_{vcp}).

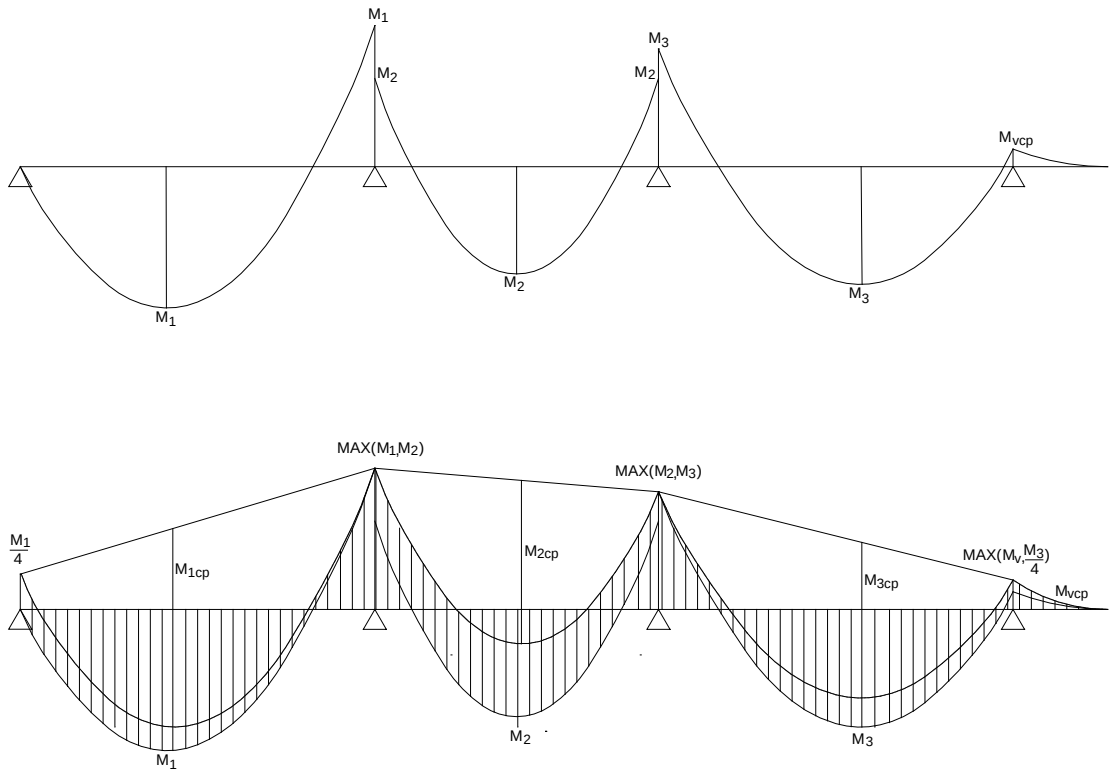

Figures A.12.4.a and b. Basic and envelope graphs of bending moments

The values of the moments M_1, M_2 and M_3 for uniformly distributed loads determined analytically are:

$$M_1 = \left(1{,}5 - \sqrt{2}\right) p_1 l_1^2$$

$$M_2 = \frac{p_2 l_2^2}{16}$$

$$M_3 = \left(1{,}5 + \frac{M_v}{p_3 l_3^2} - \sqrt{2 + \frac{4M_v}{p_3 l_3^2}}\right) p_3 l_3^2$$

Determining the negative bending moment at each support from the basic graph: In the end supports, this is taken as equal to one-quarter of the positive moment of the adjacent section calculated using the assumption of articulation at the end, or as the moment of the cantilever due to the total load (M_v), where this exists and where it is higher. In the inner supports, this is taken as the highest of the positive moments of the adjacent sections.

The envelope graph of bending moments (Figure A.12.4.b) is determined by superimposing, onto the basic graph, the graph of the bending moments of the permanent loads of each section, determined from the negative moments taken into account in the corresponding supports.

The shear stresses are taken as those corresponding to the bending moments in Figure A.12.4.b.

The vertex of the diagram of negative bending moments, in the case of flat beams or flanges of very wide compound beams, may only be subject to parabolic rounding if the stress concentration effect in the vicinity of the support is simultaneously taken into account; this fact is particularly important when the width of the support is much less than that of the beam.

For the purposes of the above, the effective width of the flat beam must be limited to the width of the support plus 1,5 times the beam depth on each side of the support.

Floor slabs without straining pieces and particularly prestressed hollow-core slabs, under the self-weight of the floor slab, including the site-cast concrete top slab, where applicable, must be regarded as double-supported elements. Only for the other permanent loads and the overload will the continuity be taken into account.

5 Transverse distribution of loads in one-way floor slabs and hollow-core slabs

5.1 Transverse distribution of linear and point loads in joist floor slabs

In joist floor slabs, account must be taken of the surface loads caused by the self-weight of the floor slab, flooring, covering, partitioning and service load and also, where these exist, linear loads caused by walls and heavy partitions (larger than a thick partition) and, where applicable, point or localised loads.

In roof slabs, account must be taken of the surface loads caused by the self-weight of the slab, including infill or boarding with partitions, flooring or roofing, insulation, coverings, snow or service load if this is more unfavourable and, where applicable, wind load. In addition, linear, point or localised loads shall be taken into account where these exist.

Partitioning and flooring may be taken into account as permanent loads and therefore, in general, the study of their section-by-section variation is not required.

The distribution of point loads basically situated in the centre of the length of an inner joist, or linear loads parallel to these, in the absence of more precise calculations, can be determined in a simplified manner by multiplying the load by the factors indicated in Table A.12.5.1:

Table A.12.5.1 Transverse distribution factors for point or linear loads

Joist	1	2	3	4
Factor	0,30	0,25	0,15	0

In this case, the site-cast top slab must be reinforced to withstand a moment equal to:

$0{,}3\ p_d$, for linear loads;
$0{,}125\ P_d$, for point loads;

where:
P_d Design point load, in kN;
p_d Design linear load, in kN/m, per m of beam.

This reinforcement must extend in the direction of the joists up to a distance of L/4 from the point load and the same length from the ends of the loaded zone in the case of a linear load and in the direction perpendicular to these until reaching beam 4 in Figure A.12.5.1.

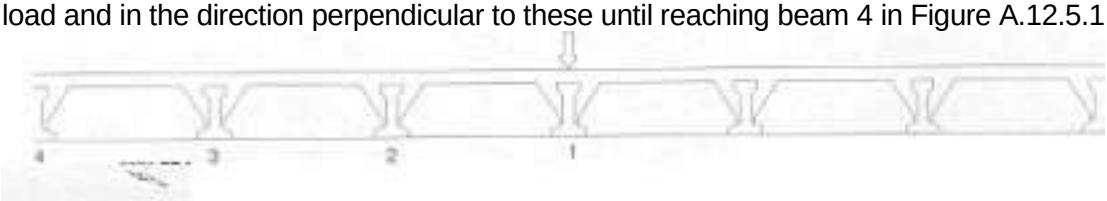

Figure A.12.5.1 Transverse distribution of point or linear loads

5.2 Transverse distribution of linear and point loads in prestressed hollow-core floor slabs

5.2.1. Calculation method

Two calculation methods may be used which involve load distribution according to the elasticity theory and no load distribution.

The first method must only be used when lateral displacements are limited as stipulated in section 5.2.3 of this Annex. Otherwise, the calculation must be carried out according to the second method.

The linear loads parallel to the edge of the elements and no greater than 5 kN/m may be replaced by a load uniformly distributed over a width equal to one-quarter of the span on both sides of the load. If the available width next to the load is less than one-quarter of the span, the load must be distributed over a width equal to that available on one side, plus one-quarter of the span on the other side.

5.2.1.1.Distribution of the load according to the elasticity theory

The elements shall be regarded as isotropic or anisotropic slabs and the longitudinal joints as hinges.

The percentage of the load on the directly loaded element, determined from the calculation, must be multiplied, in the Ultimate Limit State, by a factor of γ = 1,25; the total percentage of the load transmitted via the adjacent elements may be reduced by the same quantity and is distributed between the various elements according to their corresponding load percentages.

As an alternative to the analytical determination, the transverse load distribution may be determined using graphs based on the elasticity theory. Sections 5.2.4 and 5.2.5 provide graphs for slabs with a width b = 1,20 m.

5.2.1.2. No load distribution

Each element must be designed taking into account that all the loads act directly on this element, assuming zero shear in the transverse joints. In this case, the transverse load distribution and the associated torsional moments can be ignored in the Ultimate Limit State. However, in the Serviceability Limit State, the requirements laid down in sections 6.1 and 6.2 of this Annex must be met. The effective width must be limited in accordance with section 5.2.2 of this Annex.

5.2.2. Limitation of the effective width

If the Ultimate Limit State calculation is based on the second method defined in section 5.2.1.2 (no load distribution), for point loads and for linear loads with a characteristic value greater than 5 kN/m, the maximum effective width must be limited to the width of the load increased by:

a) In the case of loads inside the floor slab, double the distance between the centre of the load and the support, but never more than half the width of the loaded element.
b) In the case of loads on free longitudinal edges, once the distance between the centre of the load and the support, but no more than half the width of the loaded element.

5.2.3. Limitation of lateral displacements

If the design is based on the method defined in section 5.2.1.1 for load distribution according to the elasticity theory, the lateral displacements must be limited by:

a) The members surrounding the structure,
b) Friction in the supports,

c) Reinforcement at the transverse joints, and
d) The perimeter ties.

In situations without any seismic risk, as laid down in the Earthquake-Resistant Construction Standard, only friction in the supports is needed, if it is proven that sufficient friction can develop. When calculating the friction resisting forces, the actual form of the support must be taken into account.

The strength required must be at least equal to the total vertical shear stresses which must be transmitted through the longitudinal joints.

5.2.4. Load distribution factors for loads at the centre and edges

a) Figures A.12.5.2.4.a, A.12.5.2.4.b and A.12.5.2.4.c contain graphs showing the load percentages for a centred load and an edge load. A load may be regarded as a centred load if the distance from this to the edge of the floor slab area is ≥ 2,5 times the width of the prestressed hollow-core slab (≥ 3 m). For loads between the edge and the centre, the load percentages can be determined by linear interpolation.
b) Figures A.12.5.2.4.b and A.12.5.2.4.c contain graphs showing the distribution factors for point loads at the centre of the span (l/x = 2). For loads close to the support, l/x ≥ 20, the load percentage assigned to the directly loaded slab must be taken as equal to 100%; for slabs not directly loaded, the load percentages must be taken as equal to 0%. For values of l/x between 2 and 20, the load percentages can be determined by linear interpolation.
c) When determining the load percentages, linear loads with a length greater than half the span must be regarded as linear loads. Linear loads with a length less than half the span must be regarded as linear loads if the centre of the load is in the middle of the span and as point loads in the centre of the load if the centre of this is not in the middle of the span.
d) In prestressed hollow-core floor slabs without a site-cast top slab, the load percentages, determined using the graphs, must be modified, in the Ultimate Limit State, as follows:
   - The load percentage on the directly loaded element must be multiplied by a factor of γ_M = 1,25;
   - The total percentages of the elements not directly loaded may be reduced by the same quantity according to the ratio of their load percentages.

The shear stresses at the joints must be calculated using the load percentages and shall be regarded as distributed linearly. For point loads not situated in the middle of the span and for linear loads which, according to point c), must be regarded as point loads, the effective length of the joint transmitting the shear stress must be taken as double the distance from the centre of the load to the closest support (see Figure A.12.5.2.4.d).

e) The longitudinal shear stresses at each joint may be determined using the load percentages given in the graphs. Using these shear stresses, the torsional moments in each element can be determined.

If the lateral displacements are limited according to paragraph 5.2.3, the torsional moments can be divided by a factor of 2.

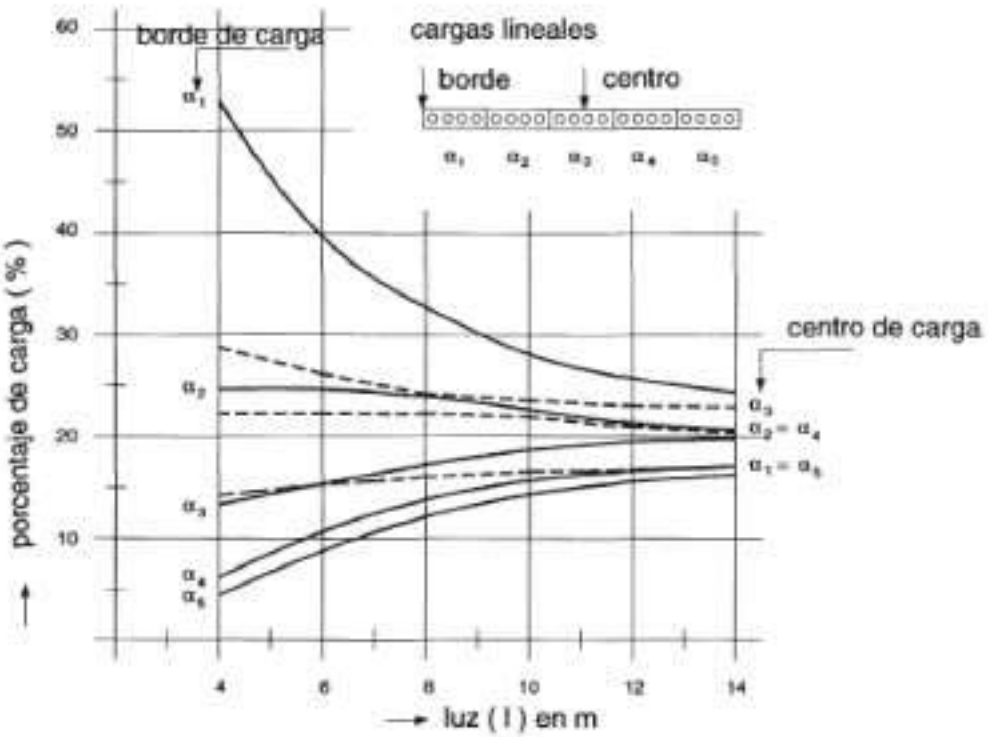

edge of load linear loads

edge centre

load percentage (%) centre of load

span (l) in m

Figure A.12.5.2.4.a Load distribution factors for linear loads (b=1,20 m)

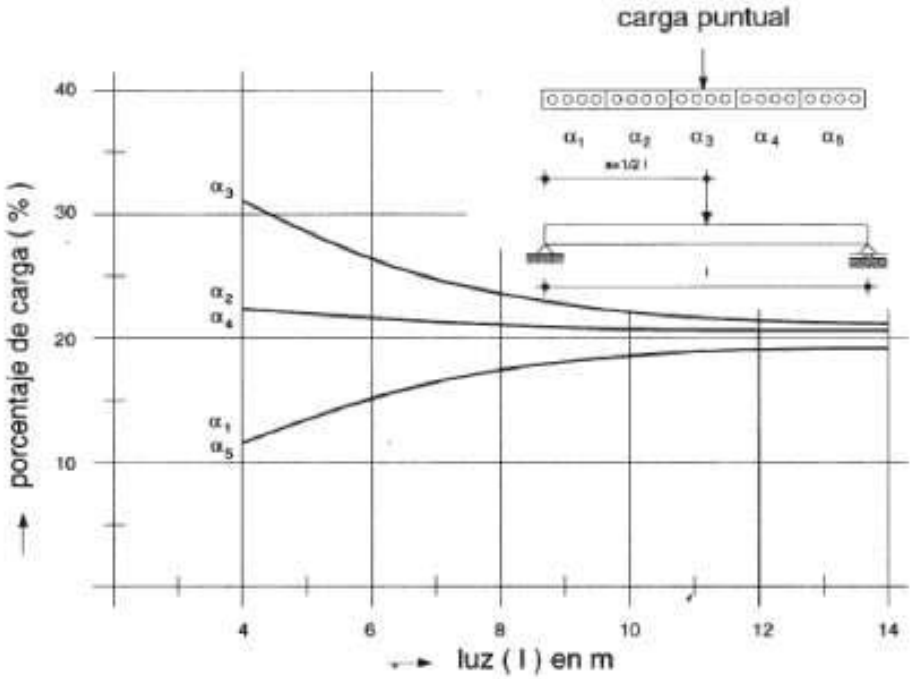

point load

load percentage (%)

span (l) in m

Figure A.12.5.2.4.b *Load distribution factors for point loads centred in the width (b=1,20 m)*

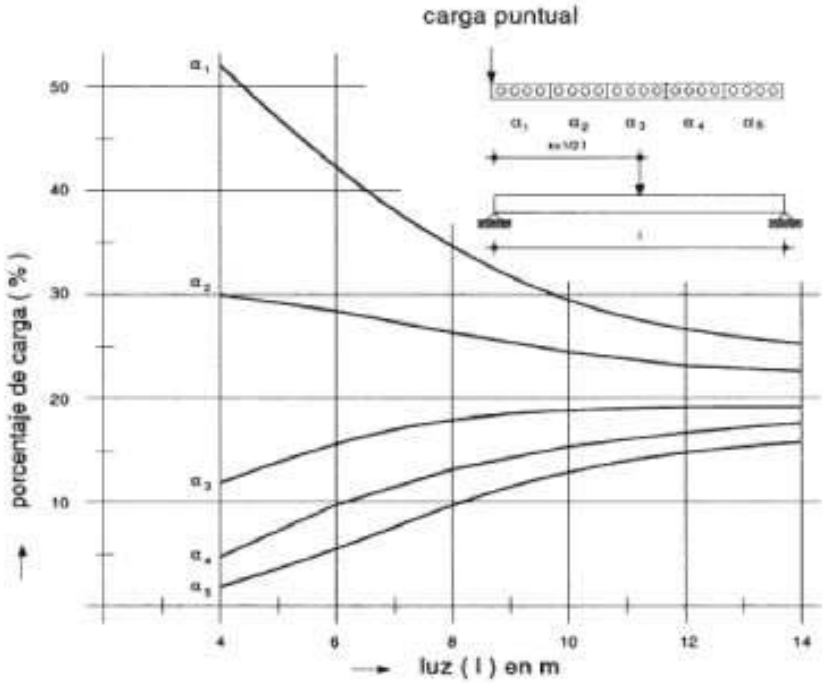

point load

load percentage (%)

span (l) in m

Figure A.12.5.2.4.c *Load distribution factors for point loads at the edge (b=1,20 m)*

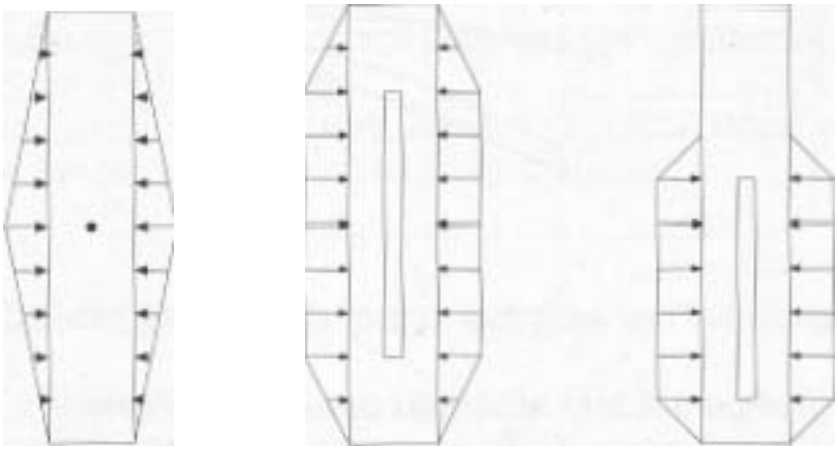

Figure A.12.5.2.4.d Assumed forms of the vertical shear stresses at the joints

5.2.5. Load distribution factors for three supported edges

a) For linear and point loads, the reaction forces may be based on Figures A.12.5.2.5.a and A.12.5.2.5.b. If the number of elements n is greater than 5, the reaction force must be multiplied by the factor (see Figures A.12.5.2.5.a and A.12.5.2.5.b):

$$1-\left(\frac{n-5}{50}\frac{s}{b}\right)$$

where s is the distance between the load and the support, in mm.

In the case of four supported edges, the reaction force of the support closest to the force must be multiplied by the factor:

$$\frac{nb-s}{nb}$$

b) If the distance between the load and the longitudinal support is greater than 4,5 times the slab width (b), the reaction force may be taken as equal to zero.
c) When determining the reaction forces, linear loads with a length greater than half the span must be regarded as linear loads. Linear loads with a length less than half the span shall be regarded as linear loads if the centre of the load is in the middle of the span and as point loads if the centre of the load is not in the middle of the span. The reaction force in Figure A.12.5.2.5.a may be multiplied by the ratio between the length of the load and the length of the span.
d) For point loads in the middle of the span, l/x= 2, the reaction forces may be determined from Figure A.12.5.2.5.b. For loads near to the support, l/x ≥ 20, the value of zero must be taken as the reaction force; for values of l/x between 2 and 20, these reaction forces must be calculated by linear interpolation. The length of the reaction force must be taken as equal to double the distance between the centre of the load and the closest support. The magnitude of the force is the value in Figure A.12.5.2.5.b multiplied by 2x/l.
e) The transverse distribution caused by the reaction force must be calculated according to paragraph 5.4, with the reaction force being regarded as an edge load (negative).

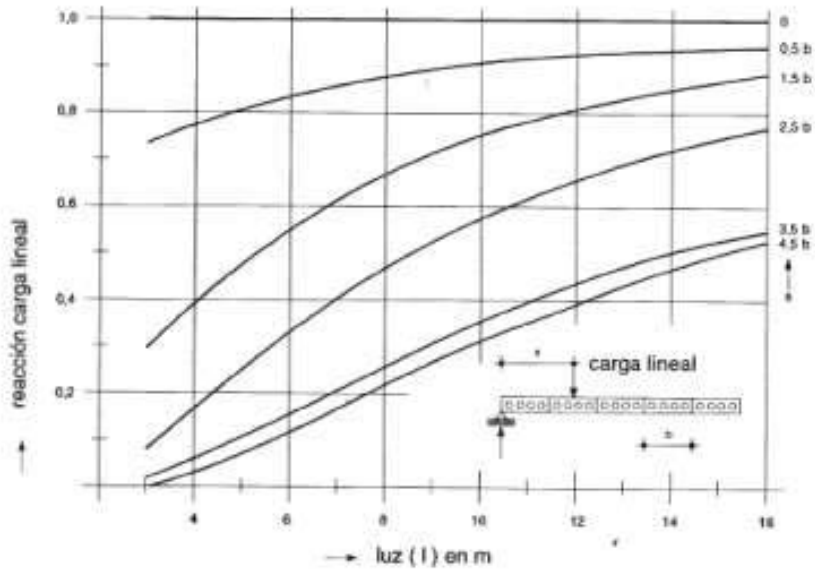

linear load reaction linear load

span (l) in m

Figure A.12.5.2.5.a Reaction force in the longitudinal support due to a linear load (b=1,20 m)

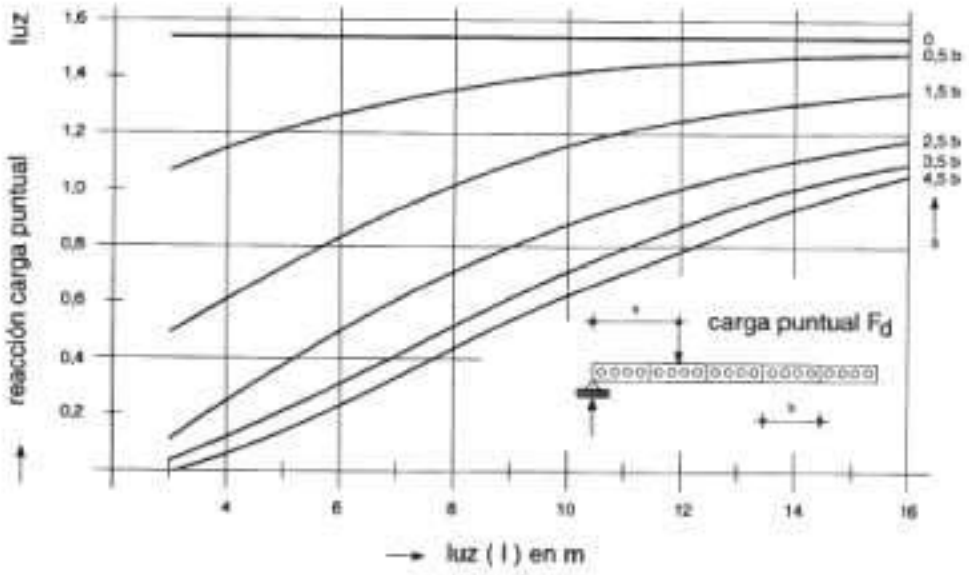

point load reaction
span

point load

span (l) in m

Figure A.12.5.2.5.b Reaction force in the longitudinal support due to a point load in the centre of the span (b=1,20 m)

6 Special load and support cases

6.1 Transverse bending due to concentrated loads in prestressed hollow-core slabs

The action of concentrated loads causes transverse bending moments in prestressed hollow-core slabs. Given that these slabs do not have any transverse reinforcement, the tensile stresses due to these bending moments must be limited. The limit value depends on the basic calculation assumptions made with regard to the load distribution.

If the elements are designed without taking into account the transverse load distribution, which means that all the loads acting on an element would be withstood exclusively by that element, the limit value of the tensile stress is $f_{ct,k}$ in the Serviceability Limit State.

In this case, in the Serviceability Limit State, the capacity under concentrated loads, q_k, in N/mm, and under a point load, F_k, in N, is calculated as follows:

a) for a linear load not situated at the slab edge:

$$q_k = \frac{20\, W_{\ell b}\, f_{ct,k}}{\ell + 2b}$$

b) for a linear load situated at the slab edge:

$$q_k = \frac{10\, W_{\ell t}\, f_{ct,k}}{\ell + 2b}$$

where:

l Length of the span, in mm.

b Width of the slab, in mm.

c) for a point load situated anywhere in a slab area:

$$F_k = 3\, W_l\, f_{ct,k}$$

where:

W_l Smaller of the section moduli, W_{lb} and W_{lt}, in mm^3/mm.

where:

W_{lb} Minimum lower section modulus in the transverse direction per unit length, in mm^3/mm.

W_{lt} Minimum higher section modulus in the transverse direction per unit length, in mm^3/mm.

If the prestressed hollow-core floor slabs are calculated taking into account the transverse load distribution according to the elasticity theory, which means that part of the loads acting on an element is distributed to the adjacent elements, the limit value of the tensile stress will be f_{ctd} in the Ultimate Limit State. The capacity to withstand concentrated loads, in this case in the Ultimate Limit State, may be determined using the same formulas but replacing q_k, F_k and $f_{ct,k}$ with q_d, F_d and $f_{ct,d}$, respectively.

6.2 Load capacity of prestressed hollow-core slabs supported on three edges

The action of loads distributed over a prestressed hollow-core slab with one supported longitudinal edge causes torsional moments in the slab. The reaction in the supports due to the torsion must be ignored in the Ultimate Limit State calculation.

The tangential stresses due to these torsional moments must be limited to $f_{ct,d}$ in the Serviceability Limit State.

The load capacity, q_k, per unit area, in N/mm, for the total load less the load due to the self-weight of the prestressed hollow-core slab will be calculated in the Serviceability Limit State as:

$$q_k = \frac{f_{ct,k}\ W_t}{0{,}06\ \ell^2}$$

With $W_t = 2t(h - h_f)(b - b_w)$

where:

W_t Torsional modulus of the section of an element according to the elasticity theory, in mm^3;

t Smaller of the values of h_f and b_w, in mm.

h_f Smaller value of the thickness of the upper or lower flange, in mm.

b_w Thickness of the outer web, in mm.

7 Supports

7.1 Supports for joists floor slabs

Direct supports are those constructed when the ribs of a floor slab are connected to the tie chain of a wall or to a beam with a depth which is clearly greater than that of the floor slab. However, when connected to a flat joist, compound beam flange or header beam, these are known as indirect supports. Figures A.12.7.1.a to A.12.7.1.i show the usual support layouts for joists floor slabs of both types.

The lengths l_1 and l_2 indicated in the Figures are given, in general, by the expressions:

a) for reinforced joists:

$$\ell_1 = \frac{V_d}{A_s f_{yd}} \cdot \ell_b \not< 100\ mm \qquad \ell_2 = \frac{V_d - \dfrac{M_d}{0{,}9d}}{A_s f_{yd}} \cdot \ell_b \not< 50\ mm$$

where:

h_o Minimum thickness of the site-cast top slab on the infill blocks, in mm.

f_{yd} Design strength of the steel, in N/mm^2.

V_d Maximum design shear stress corresponding to a joist.

A_s Area of the tension reinforcement actually used.

M_d Design negative bending moment in continuous supports.

d Effective depth of the floor slab.

i_b Basic anchorage length of the bars of the positive moment reinforcement for the joist entering the support.

b) for prestressed joists:

$$l_1 = 100 \text{ mm} \;; \qquad l_2 = 60 \text{ mm}$$

In the cases shown in Figures A.12.7.1.c), A.12.7.1.f) and A.12.7.1.g), l_1 and l_2 correspond to the case of reinforced joists and the overlap lengths with the joist reinforcement in the end supports l'_1 and in the inner supports l'_2 will be equal to:

$$\ell'_1 = \frac{V_d}{p\,T_{rd}} \not< 100\ mm \;;\quad \ell'_2 = \frac{V_d - \dfrac{M_d}{0{,}9d}}{p\,T_{rd}} \not< 60\,mm$$

where:

p Shear perimeter between joist and concrete in situ.

T_{rd} Design shear stress.

If, due to any error or deviation in execution, the beams or projecting reinforcements are short and do not comply with that indicated in the above cases, the solutions in Figures A.12.7.1.c), A.12.7.1.f) and A.12.7.1.g) shall respectively be applied.

a)

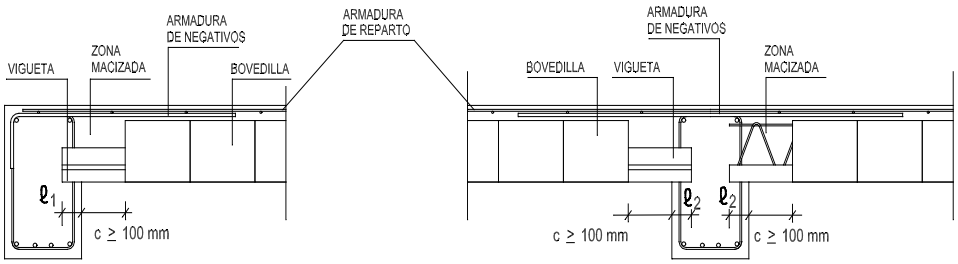

APOYO SENCILLO SOBRE VIGA DE CANTO
ENLACE POR ENTREGA

APOYO DOBLE SOBRE VIGA DE CANTO
ENLACE POR ENTREGA

b)

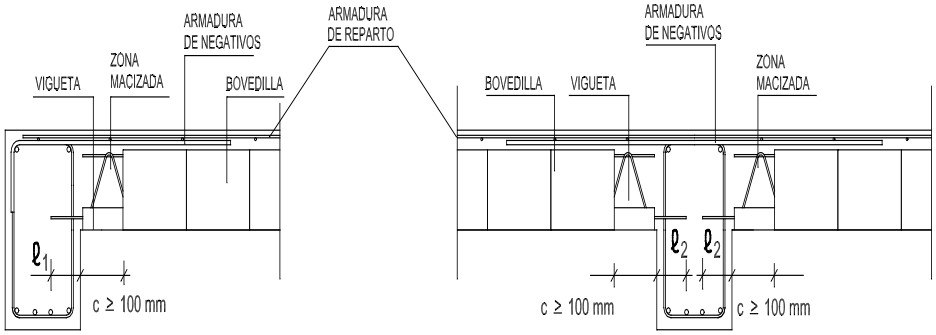

c)

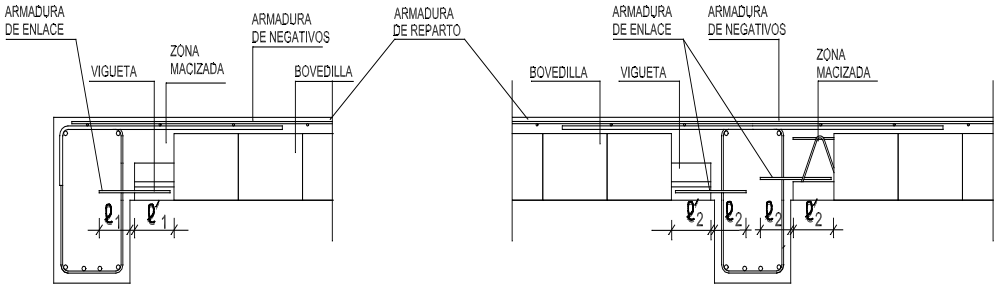

APOYO SENCILLO SOBRE VIGA DE CANTO
ENLACE POR SOLAPO

APOYO DOBLE SOBRE VIGA DE CANTO
ENLACE POR SOLAPO

d)

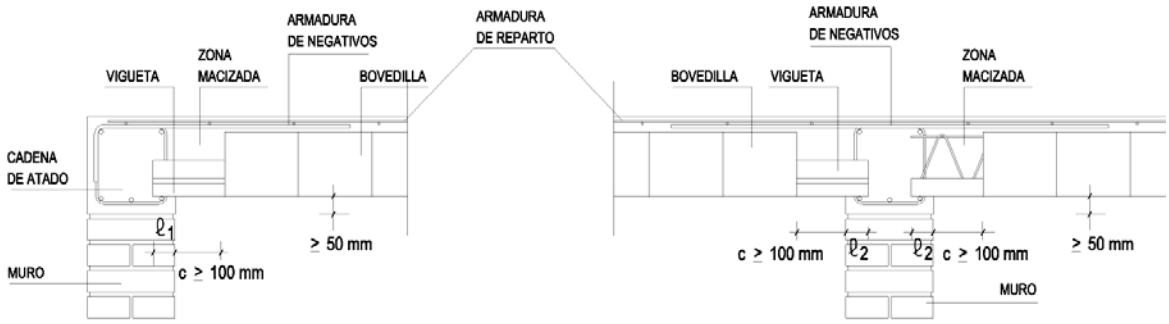

APOYO SENCILLO SOBRE MURO DE CARGA
ENLACE POR ENTREGA

APOYO DOBLE SOBRE MURO DE CARGA
ENLACE POR ENTREGA

e)

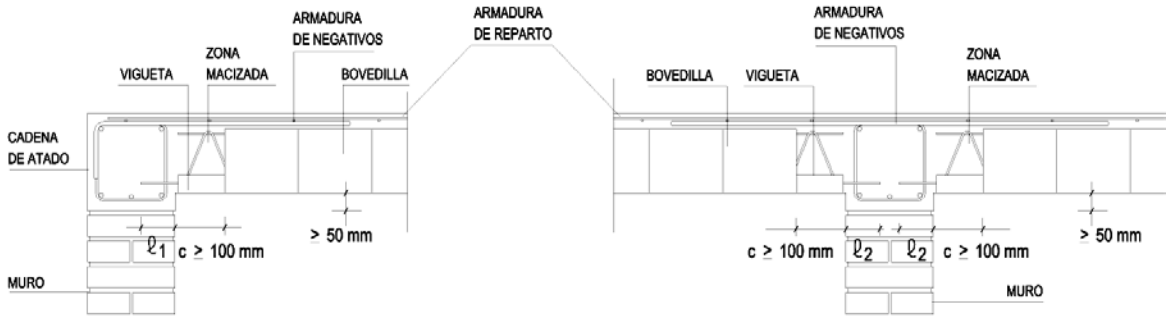

APOYO SENCILLO SOBRE MURO DE CARGA
ENLACE POR INTRODUCCIÓN DE ARMADURA SALIENTE

APOYO DOBLE SOBRE MURO DE CARGA
ENLACE POR INTRODUCCIÓN DE ARMADURA SALIENTE

f)

g)

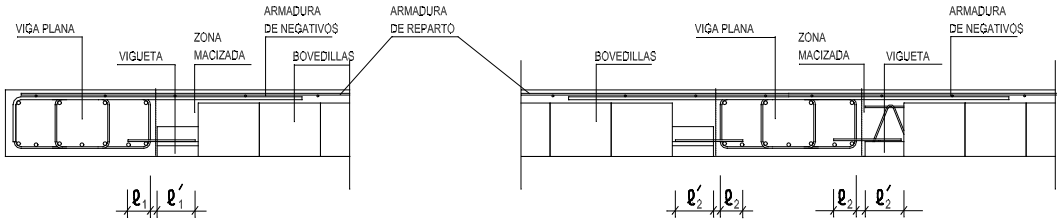

APOYO SENCILLO SOBRE VIGA PLANA
ENLACE POR SOLAPO

APOYO DOBLE SOBRE VIGA PLANA
ENLACE POR SOLAPO

h)

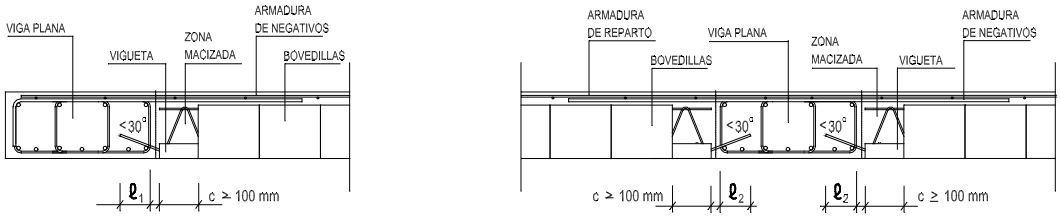

APOYO SENCILLO SOBRE VIGA PLANA
ENLACE POR INTRODUCCIÓN DE ARMADURA SALIENTE

APOYO DOBLE SOBRE VIGA PLANA
ENLACE POR INTRODUCCIÓN DE ARMADURA SALIENTE

i)

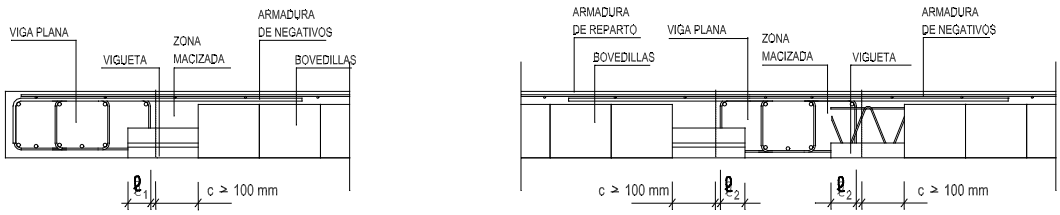

APOYO SENCILLO SOBRE VIGA PLANA
ENLACE POR ENTREGA

APOYO DOBLE SOBRE VIGA PLANA
ENLACE POR ENTREGA

j)

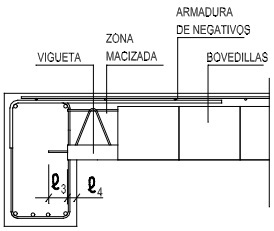

$$l_3 + l_4 \geq l_1$$

Figure A.12.7.1 Support details of beam floor slabs

a)
SINGLE SUPPORT ON EDGE BEAM
CONNECTED BY BEARING

DOUBLE SUPPORT ON EDGE BEAM
CONNECTED BY BEARING

b)
SINGLE SUPPORT ON EDGE BEAM
CONNECTED BY INTRODUCTION OF PROJECTING REINFORCEMENT

DOUBLE SUPPORT ON EDGE BEAM
CONNECTED BY INTRODUCTION OF PROJECTING REINFORCEMENT

c) [see original for diagram]

SINGLE SUPPORT ON EDGE BEAM
CONNECTED BY OVERLAP

DOUBLE SUPPORT ON EDGE BEAM
CONNECTED BY OVERLAP

[key to diagrams a), b) and c)]
VIGUETA = BEAM
ZONA MACIZADA = INFILLED ZONE
ARMADURA DE NEGATIVOS = NEGATIVE REINFORCEMENT
BOVEDILLA = FLOORING BLOCK
ARMADURA DE REPARTO = INTERMEDIATE REINFORCEMENT
ARMADURA DE ENLACE = CONNECTING REINFORCEMENT

d) [see original for diagram]

SINGLE SUPPORT ON BEARING WALL
CONNECTED BY BEARING

DOUBLE SUPPORT ON BEARING WALL
CONNECTED BY BEARING

e) [see original for diagram]

SINGLE SUPPORT ON BEARING WALL
CONNECTED BY INTRODUCTION OF PROJECTING REINFORCEMENT

DOUBLE SUPPORT ON BEARING WALL
CONNECTED BY INTRODUCTION OF PROJECTING REINFORCEMENT

f) [see original for diagram]

SINGLE SUPPORT ON BEARING WALL
CONNECTED BY OVERLAP

DOUBLE SUPPORT ON BEARING WALL
CONNECTED BY OVERLAP

[key to diagrams d), e) and f)]
CADENA DE ATADO = TIE CHAIN
MURO = WALL

VIGUETA = BEAM
ZONA MACIZADA = INFILLED ZONE
ARMADURA DE NEGATIVOS = NEGATIVE REINFORCEMENT
BOVEDILLA = FLOORING BLOCK
ARMADURA DE REPARTO = INTERMEDIATE REINFORCEMENT
ARMADURA DE ENLACE = CONNECTING REINFORCEMENT

g) [see original for diagram]

SINGLE SUPPORT ON FLAT BEAM
CONNECTED BY OVERLAP

DOUBLE SUPPORT ON FLAT BEAM
CONNECTED BY OVERLAP

h) [see original for diagram]

SINGLE SUPPORT ON FLAT BEAM
CONNECTED BY INTRODUCTION OF PROJECTING REINFORCEMENT

DOUBLE SUPPORT ON FLAT BEAM
CONNECTED BY INTRODUCTION OF PROJECTING REINFORCEMENT

i) [see original for diagram]

SINGLE SUPPORT ON FLAT BEAM
CONNECTED BY BEARING

DOUBLE SUPPORT ON FLAT BEAM
CONNECTED BY BEARING

j) [see original for diagram]

[key to diagrams g), h), i) and j)]
VIGA PLANA = FLAT BEAM
VIGUETA = BEAM
ZONA MACIZADA = INFILLED ZONE
ARMADURA DE NEGATIVOS = NEGATIVE REINFORCEMENT
BOVEDILLAS = FLOORING BLOCKS
ARMADURA DE REPARTO = INTERMEDIATE REINFORCEMENT

7.2 Supports for prestressed hollow-core slabs

7.2.1 Direct supports

In the case of direct support, the nominal minimum bearing, l_1, measured from the edge of the prestressed hollow-core slab to the inner edge of the actual support, shall be fixed according to the following criteria:

a) If all the following conditions are simultaneously met:

- the design loads are distributed and there are no significant point loads or major horizontal loads, including seismic loads,
- the overload is equal to or less than 4 kN/m^2,
- the depth of the hollow-core slab is equal to or less than 30 cm, and
- the design shear V_d is less than half that withstood by the prestressed hollow-core slab V_{u2} according to Article 44.2.3.2

$$V_d \leq V_{u2} / 2$$

The nominal minimum bearing l_1 will be 50 mm, on which a tolerance of -10 mm is permitted so that the actual bearing in situ will never be less than 40 mm;

b) If any of the above conditions are not met, the minimum value of l_1 must also be determined by checking that, in the inner edge section of the support, the lower active reinforcement, taking into account its parabolic anchorage, is capable of anchoring the design shear V_d. If the anchorage capacity of the active reinforcement is not sufficient, this reinforcement could be supplemented by passive reinforcement, correctly anchored, placed in the longitudinal joints between adjacent slabs or in infilled hollow cores, and overlapped with the active reinforcement of the slab.
When the support is constructed on mortar, it shall be considered that this material is rigid under horizontal actions and that its coefficient of friction is similar to that of concrete. Also, if the geometry of the direct support (geometry of the floor slab in relation to the geometry of the element supporting this) presents any opposition to horizontal movement, mortar cannot improve this situation and has no capacity to recentre the load in the event of successive horizontal movements in the opposite direction, which is why displacements may accumulate to the prejudice of the minimum bearing, l, required.
The same condition must be met when placing the inner edge of the elastomeric support in relation to said corner, or face, of the element supporting the floor slab.

7.2.2 Indirect supports

Indirect supports may be constructed with or without shoring of the prestressed hollow-core slab. Figures A.12.7.2 a) and b) show indirect supports with and without shoring.

- without shoring of the prestressed hollow-core slab supported on the beam or wall with connecting reinforcement (Figure A.12.7.2 b). The minimum nominal value of l_1 will be 40 mm, on which a tolerance will be accepted, including that of the length of the prestressed hollow-core slab, of ±10 mm such that the actual bearings in situ are no less than 30 mm.
- with shoring of the prestressed hollow-core slab (Figure A.12.7.2 a).

ARMADURAS ALOJADAS EN LAS JUNTAS O EN LOS ALVEOLOS, MEDIANTE CORTE LOCAL EN LA LOSA SUPERIOR DE LA PLACA SOBRE EL ALVEOLO

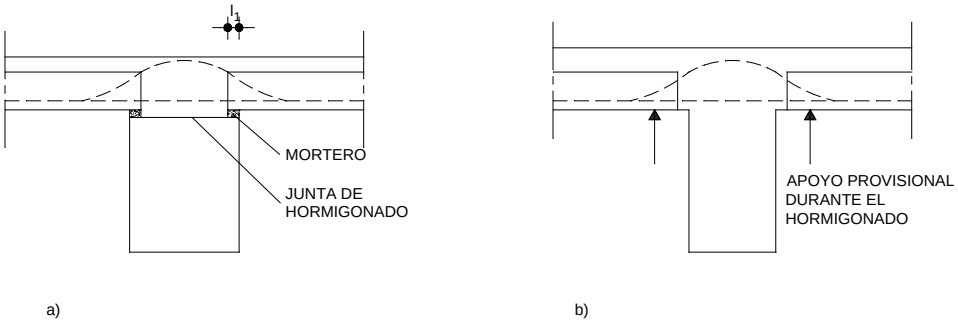

a) b)

REINFORCEMENTS PLACED AT THE JOINTS OR IN THE HOLLOW CORES BY LOCALLY CUTTING, IN THE TOP SLAB, THE PLATE ABOVE THE HOLLOW CORE

[see original for diagram] [see original for diagram]

MORTAR
CONCRETING JOINT

TEMPORARY SUPPORT DURING CONCRETING

Figures A.12.7.2. a) and b) Indirect supports for hollow-core slabs: a) without shoring of the prestressed hollow-core slab, b) with shoring of the prestressed hollow-core slab

Indirect supports require specific checks and must be calculated in accordance with the criteria in this Code or the specific standards for these products.

In general, except in special cases and whatever the type of support, it will be necessary to concrete, across the whole depth of the floor slab, the joints where the ends of the slabs meet the opposite slabs, trusses or walls. In addition, passive reinforcement must be inserted which shall be longitudinal to the slabs, which shall cross the joint and which shall be anchored on both sides.

In this case, and to ensure correct concreting of the joints and, where applicable, infilling of the hollow cores, plugging elements must be placed in the hollow cores, made of plastic or similar, which guarantee that the dimensions of the joints or infill comply with those specified in the design.

Reinforcements may be placed in the site-cast top slab or at the longitudinal joints between slabs if the joint and reinforcement dimensions allow correct concreting of this, or in infilled hollow cores, after breaking the roof of these at a certain length. If this solution is chosen, at least one hollow core will be infilled in each prestressed hollow-core slab with a width equal to or less than 60 cm and two in wider slabs.

8 Connections

8.1 Alignment of ribs

When the continuity of floor slabs is taken into account, the ribs or beams shall be aligned. However, a deviation less than the straight distance between faces in inner supports and up to 5 cm in overhanging supports may be permitted (Figure A.12.8.1.a).

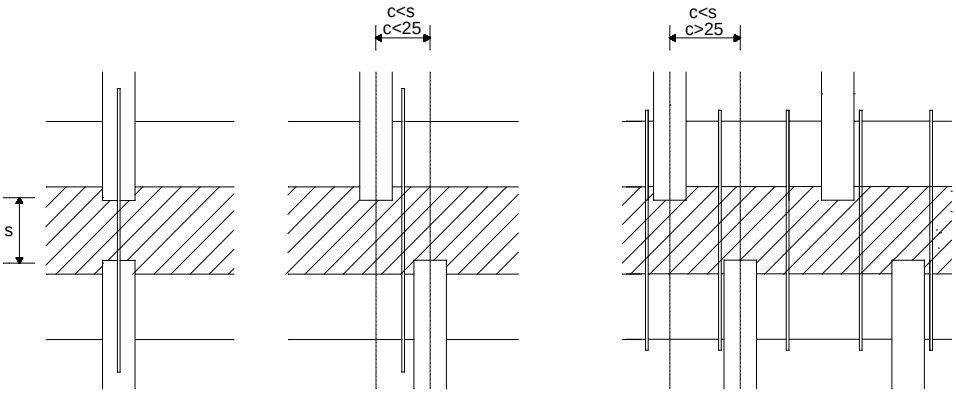

Figure A.12.8.1.a Alignment of ribs

In cases where a floor slab meets another perpendicularly, its upper reinforcement shall be anchored via a straight extension (Figure A.12.8.1.b). When an overhang has ribs perpendicular to those in the adjacent section, its upper reinforcement shall be anchored via a straight extension with a length not less than the length of the overhang or twice the inter-axis. Mention should be made of the importance, in cases of floor slabs perpendicularly overhanging the adjacent span, of the calculation to determine the length of the infill and the loads on the beam perpendicular to the overhang, particularly if the loads acting on this are higher than those on the span of the adjacent floor slab.

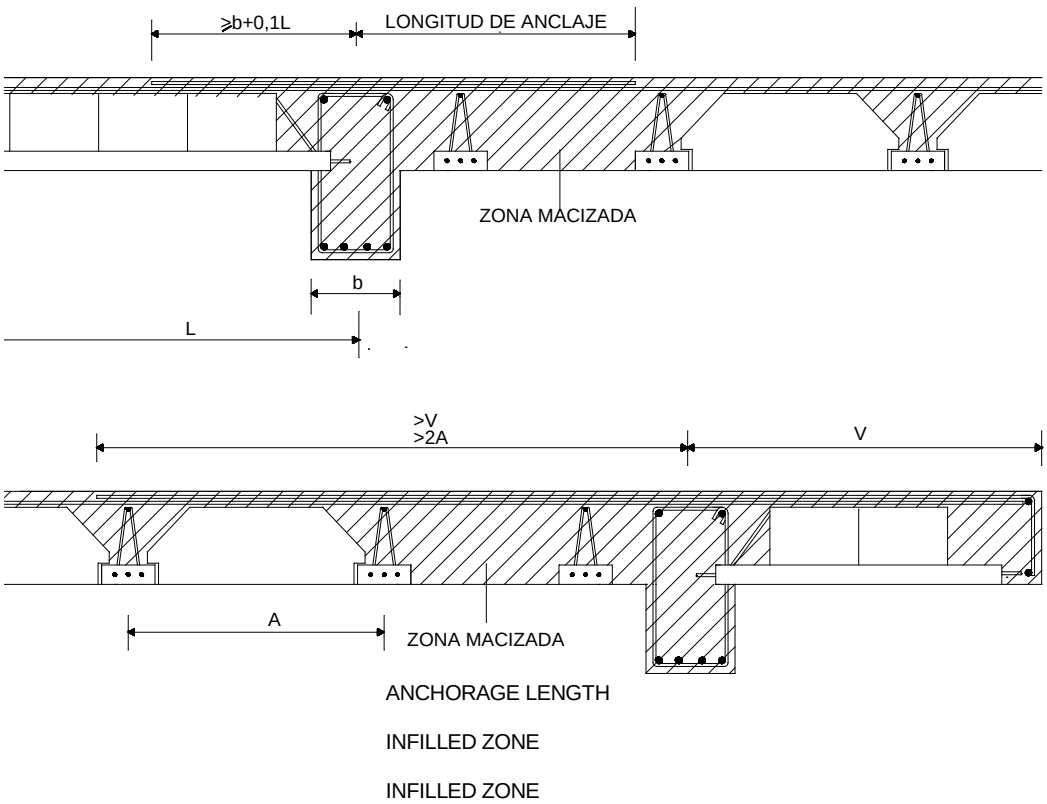

Figure A.12.8.1.b Meeting point between perpendicular floor slabs

In both cases, the compressive strength of the lower part of the floor slab shall be guaranteed by infilling the necessary parts or using equivalent measures (Figure A.12.8.1.b).

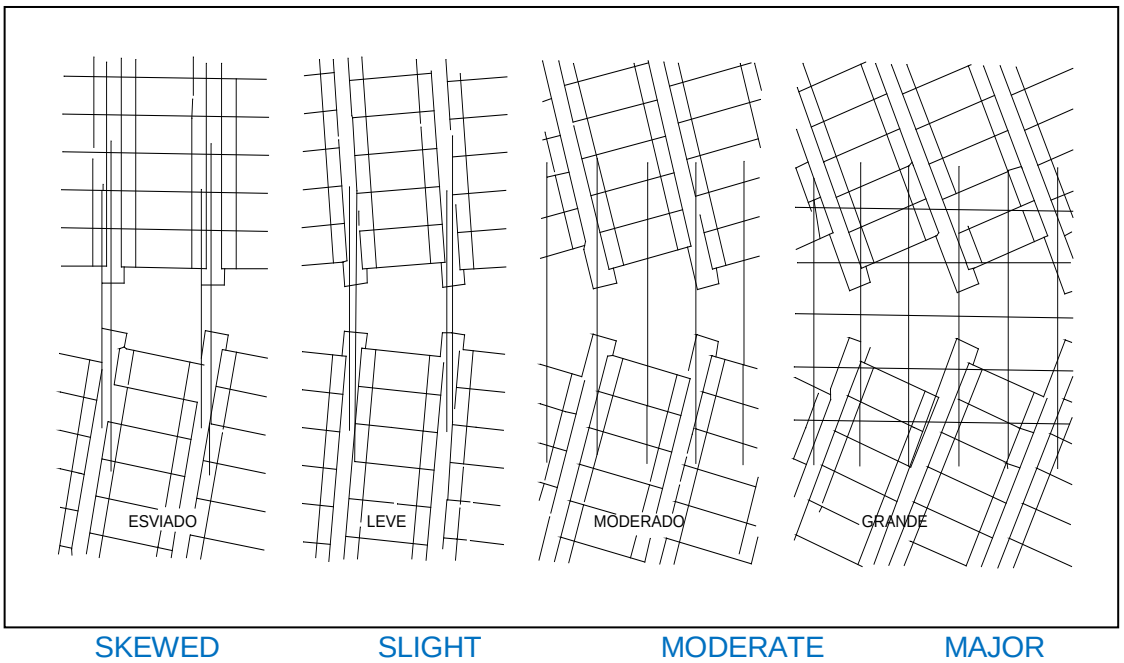

Figure A.12.8.1.c Oblique meeting point between beams

If the joists meet the support obliquely, for small angles, for example less than 22°, the calculated reinforcement (bearing in mind that efficiency is lost with the cosine to the square of the angle) may be placed according to the bisector of both directions. If the angle is larger, it is advisable to insert a grid whose section, in either of the two directions, is equal to that theoretically needed (Figure A.12.8.1.c).

Any deviation c causes stresses which are superimposed on those of the beam. These may be important if the above limits are exceeded. If the deviation c is less than 25 cm, the upper reinforcement may be placed on each pair of beams aligned at the supports, but always respecting the minimum covers specified in this Code. In the case where c is greater than 25 cm, the reinforcement will be distributed along the support line.

9 Unwanted constraints in prestressed hollow-core slabs. Minimum reinforcement at single supports

9.1 General

When calculating prestressed hollow-core slabs and when detailing their joints at supports, the unwanted constraints and their implicit negative moments must be taken into account in order to avoid possible cracking caused by the constraint on rotation which could initiate a shear failure in the vicinity of the support.

The following methods may be used to take account of the negative moments due to unwanted constraints:

a) Design the joint so that these moments are not produced.
b) Design and calculate the joint so that the cracks which may be produced do not result in dangerous situations.
c) Take into account in the calculation the negative moments due to the unwanted constraints. This procedure is detailed below.

9.2 Design by means of calculation

The following calculation procedure may be adopted:

a) At the ends of the supports, which are assumed to be free supports, unless adjustment moments cannot develop due to the nature of the support, a negative bending moment must be taken into account in the support equal to the smaller of the following values:

$$M_{d,f} = \frac{M_{1d}}{3}$$

$$M_{d,f} = \frac{2}{3} N_{d,\sup} a + \Delta M$$

with ΔM equal to the higher of:

$$\Delta M = f_{ct,d} W \qquad \text{and} \qquad \Delta M = f_{yd} A_{std} + \mu_b N_{d,sup} h$$

If the distance between the extreme edges of the hollow-core slabs is less than 50 mm or if the joint is not filled, then ΔM will be taken as equal to the smaller of the following values:

$$\Delta M = \mu_b N_{d,sup} h \qquad \text{and} \qquad \Delta M = \mu_o N_{d,inf} ih$$

where (see also Figure A.12.9.2):

M_{1d} Maximum design moment in the span, equal to $\gamma_G (M_G - M_{pp}) + \gamma_Q M_Q$ with:
- M_G Characteristic maximum moment in the span due to permanent actions.
- M_Q Characteristic maximum moment in the span due to variable actions.
- M_{pp} Characteristic maximum moment in the span due to the self-weight of the floor slab.

a Length of the support as shown in the Figure.
A_s Cross-sectional area of the connecting reinforcement.
D Distance from the lower fibre of the slab to the position of the connecting reinforcement.
h Depth of the slab.
f_{yd} Design strength of the steel.
$N_{d,sup}$ Design value of the total normal stress in the upper face of the floor slab.
$N_{d,inf}$ Design value of the total normal stress in the lower face of the floor slab.
W Section modulus of the site-cast concrete section between the ends of the elements.
μ_o Coefficient of friction in the lower side of the slab.
μ_b Coefficient of friction in the upper side of the slab.
μ_o and μ_b taken as:

0,80 For concrete on concrete.
0,60 For concrete on mortar.
0,25 For concrete on rubber or neoprene.
0,15 For concrete on fibre felt.

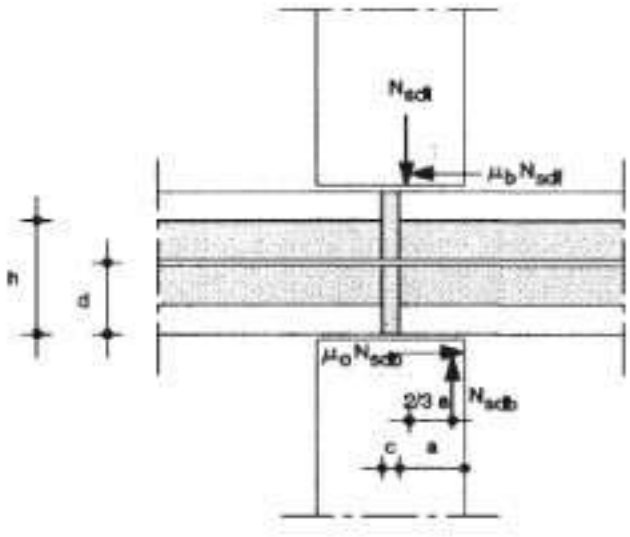

Figure A.12.9.2 Unwanted moments due to impeded deformation

b) No reinforcement is needed to absorb the moments due to the constraint on rotation if the following is met:

$$M_{d,f} \leq 0{,}5\ (1{,}6 - h) f_{ct,d}\ W_t$$

where:

h Depth of the slab, in m.

W_t Section modulus of the slab with regard to the upper fibre.

If the above condition is not met, the negative moments determined, $M_{d,f}$, must be withstood: at the joint between opposite slabs, by passive reinforcement placed in the site-cast top slab or, if this does not exist, in the longitudinal joint between adjacent slabs or in infilled hollow cores; in the prestressed hollow-core slab sections, the effect of the prestressing transfer force developed by the upper wire rods or strands may be taken into account.

If, in the section situated at mid-depth from the free edge of the support, the effect of the negative moment, $M_{d,f}$, plus the prestressing developed as established in Article 44 causes tensions higher than $f_{ct,d}$ in the upper fibre of the prestressed hollow-core slab, in addition to the check involving positive moments and lower reinforcements according to that Article, another additional check shall be made, for this section, according to Article 44.2.3.2.1.b), involving a negative moment and upper reinforcement.

ANNEX 13

Structure's contribution to sustainability index

1 General considerations

The design, execution and maintenance of concrete structures are activities, falling within the general context of construction, which can contribute to achieving the conditions allowing adequate sustainable development.

Sustainability is a global concept, not specific to concrete structures, which requires a series of environmental criteria to be met, in addition to other economic and social criteria. The contribution to sustainability of concrete structures therefore depends on meeting criteria such as the rational use of energy (both in the manufacture of construction products and in the execution of structures), use of renewable resources, use of recycled products and minimisation of the impacts on nature as a result of the execution, and also creation of healthy work areas. In addition, the design, execution and maintenance of concrete structures can take account of other aspects such as amortising the initial impacts during the structure's working life, optimising the maintenance costs, incorporating innovative techniques resulting from corporate RDI strategies, ongoing training for staff participating in the various stages of the structure, and other economic and social aspects.

This Annex defines the structure's contribution to sustainability index (ICES) which is determined from the structure's environmental sensitivity index (ISMA), with procedures being established to estimate these indices when so decided by the Owner.

The criteria indicated in this Annex relate exclusively to activities connected with concrete structures. As these are elements which often form part of a much larger structural work (building, road, etc.), the Designer and the Project Management must ensure, where applicable, that these criteria are coordinated with those adopted for the rest of the structural work.

2 General criteria applied to concrete structures

The estimation of the sustainability indicators or, where applicable, the environmental indicators covered by this Code may be aimed at allowing:

- the comparison of two structural solutions for the same construction, or
- the establishment of a quantitative parameter for assessing the quality of the structure in relation to these aspects.

In general, a structure has higher value in terms of sustainability when it ensures compatibility of the requirementa in epigraph 5 in this Code with:

- optimal consumption of materials, by using smaller quantities of concrete and reinforcements,
- extension of the structure's working life, resulting in higher amortisation during this life of the possible impacts caused during the execution stage,
- use of cements:
    - which incorporate industrial by-products, such as the mineral additions permitted by the applicable regulations,
    - which are obtained through processes incorporating raw materials which release fewer CO_2 emissions into the atmosphere,
    - which are obtained through processes consuming less energy, particularly through the use of alternative fuels which save on other

primary fuels and allow the recovery of waste.

- use of aggregates originating from recycling processes,
- use of recycled water in the concrete-mixing plant,
- use of steels:
    - o produced by recycling of ferric by-products
    - o which are obtained through processes which release fewer CO_2 emissions into the atmosphere,
    - o which are obtained through processes consuming less energy, particularly through the use of alternative fuels which save on other primary fuels and allow the recovery of waste.
- establishment of voluntary environmental certification systems in the manufacturing processes for all products used in the structure and, in particular, in the manufacturing processes for plant-mixed concrete and the reinforcement production processes at steelworks, including their transport to site, where applicable,
- use of products with officially recognised quality marks ensuring that the basic requirements of the structures are adequately met with the least possible degree of uncertainty,
- observance of preventive criteria in addition to the requirements laid down by the applicable regulations on health and safety at work,
- application of innovative criteria increasing the productivity, competitiveness and efficiency of structures and also user accessibility to these,
- minimisation of the potential impacts on the environment resulting from the execution of the structure (noise, dust, vibrations, etc.)
- in general, the less use possible of natural resources.

3 General method for taking account of sustainability criteria

The Owner shall decide on how sustainability criteria will be taken into account in a concrete structure and shall also:

- inform the Designer on this matter in order to incorporate the corresponding measures when preparing the design,
- take this into account when commissioning the execution,
- check compliance by the Constructor with the criteria during execution, and
- ensure that the appropriate maintenance criteria are conveyed to users, where applicable.

The Owner, where applicable, must inform the Designer of the sensitivity criterion which, in accordance with Article 5 of this Annex, must be met by the structure.

It is considered that a concrete structure meets the criterion defined by the Owner when, as applicable, the following conditions are met:

$$ICES_{owner} \leq ICES_{design} \leq ICES_{execution}$$

where:

"owner"	Indicates that this is ICES defined by the Owner when commissioning the work.
"design"	Indicates that this is the index established by the Designer.
"execution"	Indicates that this is the index achieved as a result of the control, in accordance with Article 98, of the actual conditions under which the structure was executed.

4 Environmental sensitivity index (ISMA) of the concrete structure

4.1 Definition of the environmental sensitivity index

The "environmental sensitivity index" of a structure is defined as the result of applying the following expression:

$$ISMA = \sum_{i=1}^{i=11} \alpha_i . \beta_i . \gamma_i . V_i$$

where:

α_i, β_i and γ_i — Weighting factors for each requirement, criterion or indicator in accordance with Table A.13.4.1.a.

V_i — Value factors determined for each criterion, in accordance with the following expression, according to the representative parameter in each case.

$$V_i = K_i . \left[1 - e^{m_i \left(\frac{P_i}{n_i} \right)^{A_i}} \right]$$

where:

K_i, m_i, n_i and A_i — Parameters whose values depend on each indicator in accordance with Table A.13.4.1.b.

P_i — Value taken by the representative function for each indicator, as indicated in section 4.3 of this Annex.

Table A.13.4.1.a Weighting factors

Environmental requirement	Weighting factor		
	α	β	γ
Environmental characteristics of concrete	0,60	0,22	0,50
Environmental characteristics of reinforcements			0,50
Optimal reinforcement of elements		0,33	0,17
Optimal environment of reinforcements			0,33
Level of execution control			0,50
Use of recycled aggregates		0,45	0,33
Optimal use of cement			0,50
Optimal use of concrete			0,17
Specific measures for controlling impacts	0,40	0,25	1,00
Specific measures for managing waste		0,75	0,67
Specific measures for managing water			0,33

Table A.13.4.1.b

Environmental requirement	K_i	m_i	n_i	A_i
Environmental characteristics of concrete	1,02	-0,50	50	3,00
Environmental characteristics of reinforcements	1,02	-0,50	50	3,00
Optimal reinforcement of elements	1,06	-0,45	35	2,50
Optimal environment of reinforcements	10,5	-0,001	1	1,00
Level of execution control	1,05	-1,80	40	1,20
Use of recycled aggregates	1,10	-0,20	2	1,10
Optimal use of cement	10,5	-0,001	1	1,00
Optimal use of concrete	10,5	-0,001	1	1,00
Specific measures for controlling impacts	10,5	-0,001	1	1,00
Specific measures for managing waste	1,21	-0,40	40	1,60
Specific measures for managing water	1,10	-0,40	50	2,60

4.2 Environmental classification of facilities

For the purposes of this Code, it is understood that a facility has an environmental mark when it is in possession of a quality mark complying with UNE-EN ISO 14001 or an EMAS.

Although not in possession of an environmental mark, it is considered that a facility has made an environmental commitment for the purposes of this Code when it meets the following conditions:

a) in the case of a ready-mixed concrete plant

- waste management or recycling processes are controlled and recorded (for example, through the use of containers, waste management plans, etc.),
- equipment is used to minimise impacts on the environment, such as filters, silencers, dampers, dust retaining screens, etc.,

b) in the case of an off-site steelworks

- it holds an officially recognised quality mark, in accordance with Article 81 of this Code,
- steel products are used which have an officially recognised quality mark,

c) in the case of a precasting plant

- equipment is used to minimise impacts on the environment, such as filters, silencers, dampers, dust retaining screens, etc.,
- waste management or recycling processes are controlled and recorded (for example, through the use of containers, waste management plans, etc.),
- specific measures are applied to optimise the concrete composition used,
- reinforcements are used:
    - which originate from steelworks that hold an officially recognised quality mark, or
    - which are produced within the precasting plant in accordance with systems for managing the waste produced and specific measures for reducing the noise produced in the steelwork processes,

d) in the case of an on-site concrete plant

- equipment is used to minimise impacts on the environment, such as silencers, dust barriers, hoppers with rubber tubes, etc.,
- waste generated is adequately controlled by using containers, and
- specific measures are applied to optimise the composition used,

e) in the case of an on-site steelworks

- cutting is analysed and, where applicable, alternatives are proposed to the Project Management which optimise the quantity of reinforcement,
- recycling of the scrap produced in the form of crops and waste is managed, and
- measures are adopted to reduce noise emissions caused by the processes used to produce the reinforcement,

f) in the case of the construction company, in relation to placing the concrete

- equipment is used to reduce the noise and control the vibrations, such as silencers, noise barriers, hopper dampers, etc,
- concrete rejects are managed, where applicable, with no inappropriate dumping being permitted, and
- the use of dust retaining screens, containers for recycling materials and leaktight formwork is ensured,

g) in the case of the construction company, in relation to assembling the reinforcements

- waste (wire rods, crops, rejects, etc.) is collected in independent containers for recycling,
- defined areas are established for storing the products and reinforcements, where applicable,

h) in the case of the construction company, in relation to water management

- a procedure is established for preventing uncontrolled discharges of water and soil contamination hazards.

4.3 Environmental criteria and representative functions

4.3.1 Environmental criterion of concrete characteristics

This criterion assesses the environmental sensitivity of the concrete-mixing plant and the procedures for placing the concrete. It has the following objectives:

- to reduce the quantity of waste originating from the production of concrete,
- to encourage greater recycling of waste whose generation is unavoidable,
- to reduce the impacts during the placing of concrete.

The representative function of this criterion is defined by

$$P_1 = \frac{1}{100} \sum_{i=1}^{i=3} p_{1i} \cdot \lambda_{1i}$$

where p_{1i} is the percentage of each type of concrete in question (ready-mixed, on-site plant or precast) used in the structure and λ_{1i} is the sum of the values applying according to the environmental conditions of the facilities, for the corresponding column of Table A.13.4.3.1.

Table A.13.4.3.1.

Facility	Environmental condition	Value factor (λ_{1i})		
		Case 1: Ready-mixed concrete (λ_{11})	Case 2: On-site plant concrete (λ_{12})	Case3: Precast elements (λ_{13})
Ready-mixed concrete plant	With environmental mark	70	-	-
	With environmental commitment	40	-	-
	Other cases	15	-	-
On-site concrete plant	With environmental mark	-	70	-
	With environmental commitment	-	30	-
	Other cases	-	0	-
Precasting plant	With environmental mark	-	-	80
	With environmental commitment	-	-	50
	Other cases	-	-	20
Construction company	With environmental mark	30	30	20
	With environmental commitment	15	15	10
	Other cases	0	0	0

The values in the above table correspond to a maximum transport distance of 45 km and 300 km for ready-mixed concrete and precast elements respectively. Where this distance is greater, the value of the factor λ_{13} corresponding to the precasting plant will be reduced by 5 and that corresponding to the construction company will be increased by 5, except in the row corresponding to "Other cases" which will remain as 0.

4.3.2 Environmental criterion of reinforcement characteristics

This criterion assesses the environmental sensitivity with which steelwork processes for the production of reinforcements are developed and also that of the on-site assembly procedures. It has the following objectives:

- to reduce the quantity of waste originating from the production of reinforcements,
- to encourage the optimal use of reinforcements and the recycling of any waste whose generation is unavoidable, and
- to reduce the impacts during the on-site assembly of reinforcements.

The representative function of this criterion is defined by

$$P_2 = \frac{1}{100} \sum_{i=1}^{i=3} p_{2i} \cdot \lambda_{2i}$$

where p_{2i} is the percentage represented by each of the possible origins of the reinforcements used in the structure (off-site steelworks, on-site steelworks or precasting plant) and λ_{2i} is the sum of the values applying according to the environmental conditions of the facilities, for the corresponding column in Table A.13.4.3.2.

Table A.13.4.3.2.

Facility	Environmental condition	Factors λ_{2i}		
		Case 1: Off-site steelworks (λ_{21})	Case 2: On-site steelworks (λ_{22})	Case 3: Precast elements (λ_{23})
Off-site steelworks	With environmental mark	80	-	-
	With environmental commitment	60	-	-
	Other cases	30	-	-
On-site steelworks	With environmental mark	-	70	-
	With environmental commitment	-	30	-
	Other cases	-	0	-
Precasting plant	With environmental mark	-	-	80
	With environmental commitment	-	-	60
	Other cases	-	-	30
Construction company	With environmental mark	20	30	20
	With environmental commitment	10	15	10
	Other cases	0	0	0

The values in the above table correspond to a maximum transport distance of 45 km and 300 km for the reinforcements and precast elements respectively. Where this distance is greater, the value of the factor λ_{13} corresponding to the precasting plant will be reduced by 5 and that corresponding to the construction company will be increased by 5, except in the row corresponding to "Other cases" which will remain as 0.

4.3.3 Environmental criterion of optimal use of reinforcement

This criterion assesses the environmental contribution due to the reduction in resources consumed to produce the reinforcement by favouring structural solutions which optimise the reinforcement quantities and simplify their on-site assembly.

The representative function of this criterion is defined by

$$P_3 = \sum_{i=1}^{i=4} \lambda_{3i}$$

where λ_{3i} represents the values obtained from Table A.13.4.3.3.

Table A.13.4.3.3

Sub-criterion		Case 1: Prestressed concrete				Case 2: Reinforced concrete			
		λ_{31}	λ_{32}	λ_{33}	λ_{34}	λ_{31}	λ_{32}	λ_{33}	λ_{34}
% of reinforced slabs with electrically welded mesh or welded mat reinforcement of a size not less than 6,00x6,00 m^2	0	0	-	-	-	0	-	-	-
	20	7	-	-	-	7	-	-	-
	40	14	-	-	-	14	-	-	-
	60	21	-	-	-	21	-	-	-
	80	28	-	-	-	28	-	-	-
	100	34	-	-	-	34	-	-	-
Assembly sistem	welding	-	0	-	-	-	25	-	-
	Tied, mechanical and others	-	16	-	-	-	32	-	-
% of reinforcements produced with forms according to UNE 36831	0	-	-	0	-	-	-	0	-
	20	-	-	7	-	-	-	7	-
	40	-	-	14	-	-	-	14	-
	60	-	-	21	-	-	-	21	-
	80	-	-	28	-	-	-	28	-
	100	-	-	34	-	-	-	34	-
Has active reinforcement?	no	-	-	-	-	-	-	-	0
	yes	-	-	-	16	-	-	-	-

4.3.4 Environmental criterion for optimization of the steel for reinforcement

This criterion assesses the environmental contribution due to the recycling of ferric waste products and the decrease of CO_2 emisions in the steel production , as well as the use of the sub-products generated in the process.

The representative function of this criterion is defined by

$$P_4 = \frac{1}{100}\frac{A}{100}\sum_{i=1}^{i=5} p_{4i}\lambda_{4i}$$

where λ_{4i} values from table A.13.4.3.4.

A steel percentage with officially recognized quality mark

p_{4i} percentage of use in the structure of each of the cases defined in Table A.13.4.3.4

Table A 13.4.3.4

Optimal use of resources in the production of steel	In accordance with or through	Points
No certification	Neither standard ISO 14001 nor the EMAS system is applied, or the product is not certified by a voluntary quality mark which is officially recognised, or the product certificate does not prove that this cement is subject to the requirements of the Kyoto Protocol	$\lambda_{41}= 0$
Production subject to environmental certification	Standard ISO 14001	$\lambda_{41}= 10$
	Standard ISO 14001 and EMAS Registration, or EMAS Registration without standard ISO 14001	$\lambda_{41}= 15$
With product certification	The steel certifies with a quality mark officially recognized that its production origen is, at least in an 80% , recicled steel.	$\lambda_{42}= 30$
	The steel certifies by mean of a quality mark officially recognized that the production complies with Kyoto requirements	$\lambda_{43}= 20$
	The steel certifies by mean of a quality mark officially recognized that recycles the produced blast-furnace slags in a percentage greater than 50%.	$\lambda_{44}= 15$
Others	The steel certifies that, the ferric raw materials used in siderurgy, as well as the steel products , have been submitted to radiologic emission controls verifiable and reported.	$\lambda_{45}= 20$
Total maximum score		$\sum_{i=1}^{4} \lambda_{4i} \leq 100$

4.3.5 Environmental criterion of execution control system

This criterion assesses the environmental contribution due to the reduction in resources consumed to produce the reinforcement as a result of an intensive level of execution control and the use of products with an officially recognised quality mark.

The representative function of this criterion is defined by

$$P_5 = \frac{1}{100} \sum_{i=1}^{i=3} p_{5i} \cdot \lambda_{5i}$$

where p_{5i} is the percentage of use in the structure of each of the cases defined in Table A.13.4.3.5 and λ_{5i} is the factor indicated in the table for each case.

Table A.13.4.3.5

Sub-criterion	Value factor
Ready-mixed concrete The reduction of γ_s, in accordance with Article 15.3.1, cannot be applied	$\lambda_{51} = 0$
Ready-mixed concrete The reduction of γ_s, in accordance with Article 15.3.1, can be applied	$\lambda_{52} = 65$
Precast concrete with a quality mark The reduction of γ_s, in accordance with Article 15.3.1, can be applied	$\lambda_{53} = 100$

4.3.6. Environmental criterion of aggregate recycling

This criterion assesses the environmental contribution due to the use of recycled aggregates. Its representative function is defined by

$$P_6 = \frac{1}{100} \sum_{i=1}^{i=2} p_{6i} \cdot \lambda_{6i}$$

where p_{61} and p_{62} are the percentages of site-cast concrete elements and precast concrete elements respectively used in the structure, and where the factors λ_{61} and λ_{62} are the percentages of recycled aggregate corresponding to each of said types of element. Each one of these percentages (λ_{61}) is limited to the value 20.

4.3.7 Environmental criterion of optimal use of cement

This criterion assesses the environmental contribution due to the use of industrial by-products and, in particular in the case of cement, due to the use of cement incorporating these by-products and also using other raw materials which minimise the CO_2 emissions into the atmosphere or which are obtained through processes consuming less energy, particularly through the consumption of alternative fuels which save on other primary fuels and allow the recovery of waste.

The representative function of this criterion is defined by

$$P_7 = \frac{1}{100} \frac{100 - H}{100} \sum_{i=1}^{i=n} p_{7i} \cdot \lambda_{7i}$$

where:

H	Percentage of concrete with an officially recognised quality mark, with the addition of fly ash or silica fume
P_{7i}	Percentage of each type of cement identified according to Table A.13.4.3.7 used in the structure
λ_{7i}	Factor obtained from Table A.13.4.3.7
n	Represents the number of different types of cement supplied to the site, identified according to Table A.13.4.3.7

Table A.13.4.3.7

Optimal use of resources in the production of cement	In accordance with or through	Points
No certification	Neither standard ISO 14001 nor the EMAS system is applied, or the product is not certified by a voluntary quality mark which is officially recognised, or the product certificate does not prove that this cement is subject to the requirements of the Kyoto Protocol	0
Production subject to environmental certification	Standard ISO 14001	10
	Standard ISO 14001 and EMAS Registration, or EMAS Registration without standard ISO 14001	15
With product certification	From the types of cement appropriate for the corresponding use, those cements are used which contain additions in accordance with the applicable standards and in a percentage less than or equal to 20%. In addition, they are certified by a voluntary quality mark which is officially recognised (*)	35
	From the types of cement appropriate for the corresponding use, those cements are used which contain additions in accordance with the applicable standards and in a percentage greater than 20%. In addition, they are certified by a voluntary quality mark which is officially recognised	50
	From the types of cement appropriate for the corresponding use, those cements are used which are subject to the requirements of the Kyoto Protocol, as proven by the product certificate consisting of a voluntary quality mark which is officially recognised	20
	From the types of cement appropriate for the corresponding use, those cements are used in which raw materials are used which produce fewer CO_2 emissions, or alternative fuels are used (non-fossil fuels), or waste of any kind is recovered as fuel, all of which is proven by the product certificate consisting of a voluntary quality mark which is officially recognised	15
Maximum total score		100

(*) When the most appropriate cement for the project in question, according to this Code, is type CEM I or type I, a minimum score of 35 points will be awarded, provided that the product is certified by a voluntary quality mark which is officially recognised, as these types of cement cannot contain any quantities of additions.

4.3.8 Environmental criterion of optimal use of concrete

This criterion assesses the environmental contribution due to the use of industrial by-products which, in the form of additions, are directly incorporated in the concrete, in accordance with the specifications contained in this Code.

The representative function of this criterion is defined by:

$$P_8 = \frac{1}{100}\frac{H}{100}\sum_{i=1}^{i=n} p_{8i} \cdot \lambda_{8i}$$

where:

- H Percentage of concrete with an officially recognised quality mark, with the addition of fly ash or silica fume
- P_{8i} Percentage of the total quantity of concrete with additions incorporated at the concrete plant, which corresponds to concretes produced with each type and proportion of addition according to Table A.13.4.3.8
- λ_{8i} Factor obtained from Table A.13.4.3.8
- n Represents the number of different types of addition used, identified according to Table A.13.4.3.8

Table A.13.4.3.8

Case	Applicable sub-criteria		λ_{7i}
Use of CEM I or type I cement	In accordance with the criteria laid down in Table A.13.3.2.6		35
Concrete plant without ISO 14000 certification	Any percentage of addition		0
Concrete plant with ISO 14001 certification	Fly ash (in % of cement weight)	12%	22
		24%	44
		35%	65
	Silica fume (in % of cement weight)	4%	22
		8%	44
		12%	65

Note: In practice it is not usual to combine several additions but, if this case arises, the score can be determined by linear interpolation of the percentages expressed in the table.

4.3.9 Environmental criterion of impact control

This criterion assesses the environmental contribution due to the structure being executed in a manner which minimises the impacts on the environment and, in particular, the emission of particles and generation of dust.

The representative function of this criterion is defined by

$$P_9 = \sum_{i=1}^{i=5} p_{9i} \cdot \lambda_{9i}$$

where p_{9i} and λ_{9i} are the parameters obtained from Table A.13.4.3.9.

Table A.13.4.3.9

Sub-criterion	p_{8i}	λ_{8i}
Use of sprinklers on site to prevent dust	1	20
Paving of site accesses or inclusion of pneumatic cleaning systems	1	20
Use of dust retaining screens or other devices	1	20
Use of chemical stabilisers to reduce the production of dust	1	20
Use of canvas and tarpaulins to cover material exposed to the weather, including during transport	1	20

4.3.10 Environmental criterion of waste management

This criterion assesses the environmental contribution due to the structure being executed in a manner ensuring the adequate management of waste generated during this process. In particular, it takes account of the existence of an excavation material management plan, a construction and demolition waste management plan and the reduction of waste caused by the concrete control, as a result of using cubic test pieces.

The representative function of this criterion is defined by

$$P_{10} = \sum_{i=1}^{i=4} \lambda_{10i}$$

where λ_{10i} is the value obtained from Table A.13.4.3.10.

Table A.13.4.3.10

Sub-criterion		Case		λ_{101}	λ_{102}	λ_{103}	λ_{104}
Management of excavation products		No controlled actions		0	_	–	–
		Everything sent to dumps		3	_	–	–
		A percentage recycled, as indicated in the next column, and the rest to dumps	20%	10	_	–	–
			40%	15	_	–	–
			60%	20	-	-	-
			80%	25	-	-	-
			100%	30	-	-	-
Management of construction and demolition waste (RCD)		No controlled actions		-	0	-	-
		Everything sent to dumps		-	5	-	-
		A percentage recycled, as indicated in the next column, and the rest to dumps	20%	-	12	-	-
			40%	-	21	-	-
			60%	-	30	-	-
			80%	-	39	-	-
			100%	-	50	-	-
Minimisation of sulphur waste as a result of using cubic test pieces	Concrete without an officially recognised quality mark, according to section 5.1 of Annex 19.	All cylindrical test pieces		-	-	0	-
		Cubic test pieces used to control some concrete according to the percentage indicated in the next column out of the total number of test pieces	20%	-	-	4	-
			40%	-	-	8	-
			60%	-	-	12	-
			80%	-	-	16	-
			100%	-	-	20	-
	Concrete with an officially recognised quality mark, according to section 5.1 of Annex 19, as a percentage of the total placed concrete which is indicated in the next column	33%	Cylindrical (*)	-	-	-	6
			Cubic (**)	-	-	-	20
		67%	Cylindrical (*)	-	-	-	12
			Cubic (**)	-	-	-	20
		100%	Cylindrical (*)	-	-	-	17
			Cubic (**)	-	-	-	20

(*) Concrete without an officially recognised quality mark is controlled using cylindrical test pieces.
(**) Concrete without an officially recognised quality mark is controlled using cubic test pieces.

4.3.11 Environmental criterion of water management

This criterion assesses the environmental contribution due to the structure being executed in a manner ensuring the adequate management of the water used during this process. In particular, it takes account of the provision of efficient concrete curing systems, the installation of water-saving devices and the collection and use of rainwater.

The representative function of this criterion is defined by

$$P_{11} = \sum_{i=1}^{i=4} \lambda_{11i}$$

where λ_{11i} is the value obtained from Table A.13.4.3.10.

Table A.13.4.3.11

Conditions		λ_{10i}
Type of company	With environmental commitment	0,20
	With ISO 9001 environmental mark	0,40
The design includes, and justifies in the budget, any technique allowing efficient curing to be achieved with regard to water consumption, e.g. use of covers to prevent evaporation (canvas), watering by spraying on a timer, etc.		0,20
The design proposes, and justifies in the budget, the use of water-saving devices at consumption points.		0,20
The design proposes, and justifies in the budget, the use of containers for collecting rainwater and the subsequent use of this. This water may subsequently be used in other applications without having to use resources from the mains water supply. This use must not be prejudicial to any other type of characteristic, for example durability.		0,20

5 Structure's contribution to sustainability index

The index of contribution to substainability (ICES) is defined as the result of applying the following expression:

$$ICES = a + b.ISMA$$

It must be also:

$$\text{ICES} \leq 1$$
$$\text{ICES} \leq 2.\text{ISMA}$$

where:

a Social contribution factor, determined as the sum of the factors indicated in Table A.13.5, according to the applicable sub-criteria.

$$a = \sum_{i=1}^{i=5} a_i$$

Table A.13.5

Sub-criterion	In design	In execution
The Constructor applies innovative methods which are the result of RDI projects carried out in the last 3 years	$a_1 = 0$	$a_1 = 0{,}02$
At least 30% of staff working on the execution of the structure have followed specific training courses in technical, quality or environmental aspects	$a_2 = 0$	$a_2 = 0{,}02$
Voluntary health and safety measures are adopted in addition to those required by law for the execution of the structure	$a_3 = 0$	$a_3 = 0{,}04$
A public web page devoted to the work is created in order to inform the population, including about its characteristics and completion deadlines and also its economic and social implications.	$a_4 = 0{,}01$	$a_4 = 0{,}02$
This involves a structure which is part of a structural work declared as being in the public interest by the competent public authority.	$a_5 = 0{,}04$	$a_5 = 0{,}04$

b Contribution factor due to the extension of the working life, determined by using the following expression,

$$b = \frac{t_g}{t_{g,\min}} \leq 1{,}25$$

where:

t_g Working life actually indicated in the design for the structure, within the ranges specified in Article 5, and

$t_{g,min}$ Value of the working life specified in Article 5.1 of this Code for the corresponding type of structure

Using the ICES, the structure's contribution to sustainability can be classified according to the following levels:

Level A: 0,81 < ICES < 1,00
Level B: 0,61 < ICES < 0,80
Level C: 0,41 < ICES < 0,60
Level D: 0,21 ICES < 0,40
Level E: 0,00 < ICES < 0,20

where A is the maximum end of the scale (maximum contribution to sustainability) and E is the minimum end of the scale (minimum contribution to sustainability)

6 Checking the contribution to sustainability criteria

6.1 Determination of the design value of the structure's contribution to sustainability index

Where the Owner decides to apply sustainability criteria to the structure, the Designer must define a strategy in the design in order to achieve these criteria, by determining the design value of the structure's contribution to sustainability index ($ICES_{design}$) and identifying the criteria, or sub-criteria where applicable, which must be met in order to achieve the value set.

To determine the $ICES_{design}$, the following will be adopted: $a_1 = a_2 = a_3 = 0$.

In addition, the Designer must indicate the measures which must be taken into account during the execution of the structure in the corresponding documents and, in particular, in the technical report, specific technical specifications and budget.

6.2 Determination of the actual value of the structure's contribution to sustainability index on execution

Where the Owner has decided to apply sustainability criteria to the structure, the Project Management must check, either directly or through a quality control body, that the actual value of the structure's contribution to sustainability index as a result of the actual conditions of its execution ($SCSI_{execution}$) is not less than the value of the index defined in the design.

The documents proving the final value of the $ICES_{execution}$ shall form part of the Final Work Documentation

ANNEX 14

Recommendations for using concrete with fibres

1 Scope

The specifications and requirements included in the main articles of this Code relate to concretes which do not incorporate fibres in their mass. As a result, some additional and specific recommendations must be given for cases where fibres are used in concrete, given that these may alter some of its properties, in order to improve certain types of performance, whether in the fresh state, at an early age or when hardened. The following are expressly outside the scope of this Annex:

- Concretes with polymers (impregnated with polymers, made of polymers or modified with polymers).
- Concretes produced using fibres other than those indicated in this Annex as acceptable for use in concrete.
- Concretes in which the distribution and/or orientation of the fibres is intentionally forced.
- Concretes with a dosage of fibres higher than 1,5% by volume.

For the purposes of this Annex, fibre-reinforced concrete (FRC) is defined as concrete which includes in its composition discrete short fibres which are randomly distributed in its mass. The provisions generally apply to all types of fibre, although it should be borne in mind that the existing fundamental knowledge base relates to steel fibres which is reflected to a certain extent in that knowledge.

This concrete can be used for structural and non-structural purposes. Using fibres in concrete has a structural purpose where their contribution is taken into account in the calculations of any of the ultimate or serviceability limit states and where they partially or totally replace the reinforcement in certain applications. It shall be considered that fibres have no structural function when they are included in the concrete for other purposes, such as improving fire resistance or controlling cracking.

Fibres may be added to plain, reinforced or prestressed concrete and this may be done by using any of the various systems for incorporating fibres in concrete which are approved practice. Where there is no such approved practice, the system used must be explained.

This Annex mentions certain national and international standards which relate to the subject of this Annex and which may serve as support or reference.

Each drawing of the structure must include a concrete classification table which shall indicate the additional conditions to be met by concrete with fibres, as set out in Article 39.2 of this Code.

The classification proposed in this Annex reflects the basic specifications which are required when fibres have a structural purpose. In addition to the properties which are implicit in the concrete classification according to Article 39.2 of this Annex, the Specific Technical Specifications must include those additional characteristics required of concrete with fibres and also the test methods for verifying these characteristics and the values which must be met by these characteristics. In all cases, a proposed dosage must be indicated with the following details:

- Dosage of fibres in kg/m^3
- Type, dimensions (length, effective diameter, slenderness), shape and tensile strength of the fibre (in N/mm^2), in the case of fibres with a structural purpose.

However, the effectiveness of the various fibres available on the market can be very variable and the conditions of availability of the product or the site conditions may recommend a modification of some of the characteristics specified in the specifications, whether in relation to the type, dimensions and therefore the dosage of fibres needed to obtain the same properties. As a result, when concrete is designated by its properties, the dosage indicated in the Specific Project Technical Specifications must be understood as a guideline. Before starting the concreting, the supplier shall propose a site-specific dosage and shall perform the prior tests in accordance with Annex 22 of this Code. In light of the results, the Project Management shall accept the proposed dosage or request new proposals.

2 Additions to the text of this Code

Below are the recommendations for using concrete with fibres, with reference to the relevant Titles, Chapters, Articles and Sections of this Code.

TITLE 1. DESIGN BASES

CHAPTER 3. ACTIONS

Article 10. Characteristic values of actions

10.2. Characteristic values of permanent actions

The density and usual dosages of fibres shall not alter the characteristic specific gravity values of concrete with fibres compared to those of concrete without these.

CHAPTER 4. MATERIALS AND GEOMETRY

Article 15. Materials

15.3. Partial safety factors for materials

For the Ultimate Limit States and for the Serviceability Limit States, the partial safety factors given in the main articles (Table 15.3) shall be maintained as it is understood that the incorporation of fibres under normal conditions does not alter the uncertainties leading to the estimation of these values.

TITLE 2. STRUCTURAL ANALYSIS

CHAPTER 5. STRUCTURAL ANALYSIS

The incorporation of fibres alters the non-linear behaviour of structural concrete, particularly under tension, thereby preventing the opening and propagation of cracks. As a result, carrying out a non-linear analysis may be particularly recommended in cases where the fibres constitute an important part of the concrete's reinforcement.

In addition, given the ductility introduced by the presence of fibres, the principles for applying the linear analysis method with limited redistribution and the plastic calculation methods are regarded as valid, when the requirements for applying these, as specified in Article 19, are met.

The plastic or ultimate moments shall be determined in accordance with section 39.5 and, for solid slabs, it shall be considered that the fracture lines have sufficient rotational capacity if the depth of the neutral fibre in the Ultimate Limit State (ULS) of simple bending is less than 0,3 d. The structural assessments for these purposes must be carried out using tests which represent the real conditions.

The use of structural fibres may increase the width of the compression struts; this can be taken into account in the strut and tie rod models. As a result, the combination of conventional reinforcement and fibres may form an alternative for reducing the amount of conventional reinforcement in D-Regions where there is a high density of reinforcement preventing the correct concreting of the element.

TITLE 3. TECHNOLOGICAL PROPERTIES OF MATERIALS

CHAPTER 6. MATERIALS

Fibres. Definitions

Fibres are short elements with a small cross-section which are incorporated in the mass of the concrete in order to give it certain specific properties.

In general, those fibres which provide greater fracture energy to plain concrete can be classed as structural fibres (in the case of structural fibres, their contribution can be taken into account when calculating the response of the concrete section). Those fibres which, without taking this energy into account in the calculation, improve certain properties such as, for example, control of shrinkage cracking, increase of fire resistance, abrasion, impact and others, can be classed as non-structural fibres.

The geometric characteristics of fibres (Length (l_f), Equivalent diameter (d_f), Slenderness (λ)) shall be established in accordance with UNE 83500 Part 1 and UNE 83500 Part 2. Furthermore, depending on their nature, fibres shall be classed as:

- Steel fibres
- Polymer fibres
- Other inorganic fibres

The effectiveness of fibres can be assessed in terms of the fracture energy, expressed in Joules (J), which will be determined for cast concrete using UNE 83510. Alternatively, in order to reduce the dispersion and testing times, the Designer or, where applicable, the Project Management shall assess, under their responsibility, the use of other procedures, such as the Barcelona double-punch test carried out on a cylindrical test piece of 15x15 cm.

Steel fibres

These fibres must comply with UNE 83500-1 and, depending on the manufacturing process, are classed as: drawn (Type 1), strip-cut (Type II), melt extracted (steel shavings) (Type III) and others (for example, molten steel fibres) (Type IV). The shape of the fibre has an important effect on the bond characteristics of the fibre with the concrete and may be very varied: straight, undulated, corrugated, shaped with different-shaped ends, etc.

It is recommended that the length of the fibre (l_f), is at least twice the size of the largest aggregate. It is common to use lengths of 2,5 to 3 times the maximum aggregate size. In addition, the diameter of the pumping pipe means that the fibre length must be less than two-thirds of the pipe diameter. However, the fibre length must be sufficient to ensure the necessary bond with the matrix and to prevent pull-out occurring too easily.

Small-diameter fibres of equal length allow the number of these per unit weight to be increased and make the framework or mesh of fibres more dense. The spacing between fibres is reduced when the fibre is finer, making this more efficient and allowing an improved redistribution of the load or stresses.

Polymer fibres

Plastic fibres are formed using an extruded and previously cut polymer material (polypropylene, high-density polyethylene, aramid, polyvinyl alcohol, acrylic, nylon, polyester).

These may be uniformly added to the concrete, mortar or slurry. They are governed by UNE 83500-2 and, depending on the manufacturing process, are classed as: extruded monofilaments (Type 1), fibrillated films (Type II).

Their dimensions may vary along with their diameter and format:

Micro-fibres: < 0,30 mm diameter
Macro-fibres: ≥ 0,30 mm diameter

Macro-fibres may collaborate structurally as their length can vary (from 20 mm to 60 mm) but this must be in proportion to the maximum aggregate size (length ratio of 3:1 fibre: maximum aggregate size).

Micro-fibres are used to reduce cracking due to plastic shrinkage of the concrete, particularly in pavements and floors, but they cannot assume any structural function. They are also used to improve fire resistance and, in this case, the number of fibres per kg should be very high.

In addition, due to their physical/chemical characteristics, micro-fibres are characterised by their fibre frequency which indicates the number of fibres present in 1 kg and which depends on the fibre length and particularly on its diameter.

Other inorganic fibres

With regard to this type of fibre, those included in this Annex are glass fibres which are the ones currently usually used in the field of concrete. Other fibres are not included as, although they exist, they are used for other applications outside the field of concrete.

Glass fibres

This type of fibre may be used provided that its adequate behaviour during the working life of the structural element is guaranteed, given the potential problems of deterioration in this type of fibre as a result of the alkalinity of the environment.

Given that FRCs can experience significant reductions in strength and tenacity due to exposure to the environment, the appropriate measures must be taken in relation to both the fibre and the cement matrix in order to ensure its protection. In this respect, fibres may have a surface protective layer made of an epoxy material which reduces their affinity with calcium hydroxide, a process responsible for weakening the compound.

Article 31. Concretes

31.1 Composition

When the fibres used are metallic, the total chloride ion contributed by the components shall not exceed 0,4% of the cement weight.

31.2 Quality conditions

When fibres are used, the quality conditions or characteristics required in terms of the concrete in the Specific Project Technical Specifications shall include the maximum length of the fibres.

When fibres have a structural function, the values of the residual characteristic tensile strength due to bending, $f_{R,1,k}$ *and* $f_{R3,k}$, as specified in Article 39, shall be included.

When fibres with other functions are used, the methods for verifying the suitability of the fibres for this purpose shall be specified.

31.3 Mechanical characteristics

For the purposes of this Code, the flexural strength of concrete refers to the strength of the product unit or mix and is determined from the flexural fracture test results. At least three of these tests must be carried out on prismatic test pieces of a width equal to 150 mm, height

equal to 150 mm and length equal to 600 mm, at 28 days of age, produced, stored and tested in accordance with EN 14651.

When the element to be designed has a depth less than 12,5 cm or when the concrete offers flexural hardening with a residual flexural strength $f_{R,1,d}$ higher than the tensile strength $f_{ct\,d}$,, it is recommended that the dimensions of the test piece and the preparation method are adapted to simulate the actual behaviour of the structure and that the test is carried out using unnotched test pieces.

For structural elements working as a slab, other alternative types of test may be used, provided that these are confirmed by a conclusive experimental campaign. When the deviation between the results for one product unit exceeds certain limits, the process followed must be verified in order to ensure that these results are representative.

In order to ensure that a product unit is uniform, the difference between the results for a group of three test pieces (difference between the highest and lowest results, divided by the mean value of the three), taken from the same mix, may not exceed 35%.

The criteria laid down in this Code for determining the value of the tensile strength, $f_{ct,}$, using the results of the indirect tensile test are valid provided that these refer to the limit of proportionality.

For compressive stresses, the stress-strain curve for concrete with fibres shall not be any different from that in the main articles as it may be considered that the addition of fibres does not significantly alter the behaviour of the concrete under compression.

The test proposed in UNE-EN 14651 provides the load-crack opening diagram for concrete (Figure A.14.1). Using the load values corresponding to the limit of proportionality (F_L) and to the crack openings of 0,5 mm and 2,5 mm (F_1 and F_3 respectively), the flexural strength value ($f_{ct,fl}$)) and the corresponding residual flexural strength values, : $f_{R,1}$ and $f_{R,3}$, can be determined.

The flexural strength and residual flexural strength values according to said standard EN 14651 are calculated by assuming a linear elastic distribution of stresses at the fracture point.

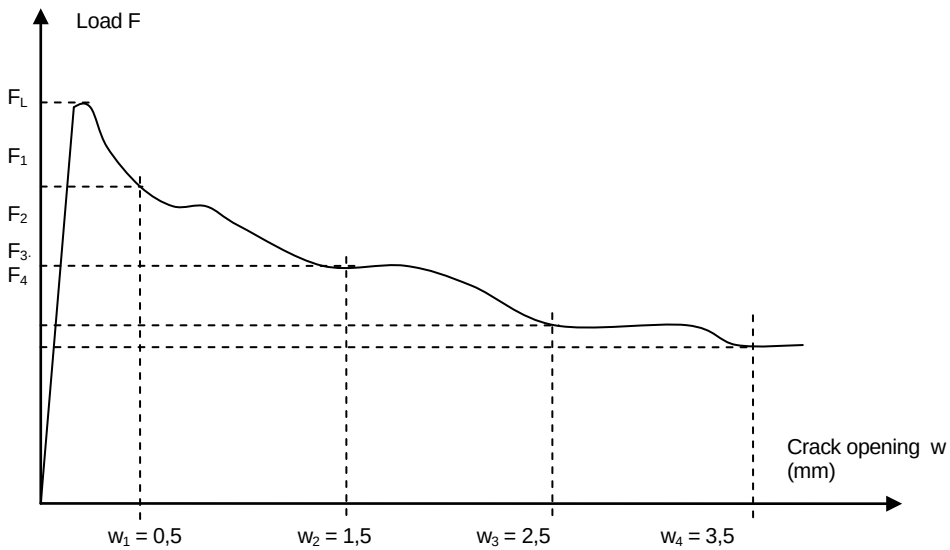

Figure A.14.1 Typical load-crack opening diagram

Using these values, the tension calculation diagram can be determined as indicated in Article 39. Other diagrams which directly define these constituent equations may also be used, provided that the results are endorsed by conclusive experimental campaigns and the specialised bibliography.

31.4 Minimum strength value

So that fibres can be regarded as having a structural function, the residual characteristic tensile strength due to bending $f_{R,1,k}$ shall not be less than 40% of the limit of proportionality and $f_{R,3,k}$ shall not be less than 20% of the limit of proportionality (see Article 39.1).

31.5 Workability of concrete

The use of fibres in concrete can cause a loss of workability, the magnitude of which will depend on the type and length of the fibre used and also on the quantity of fibres incorporated. This factor must particularly be taken into account when determining the consistency of concrete where the fibres are added on site.

In the case of concrete with fibres, it is recommended that the consistency of the concrete is not less than 9 cm of slump in the Abrams cone (although this depends on the type of application and placing system). In this case, the Abrams cone test is not particularly suitable and it is recommended that the consistency is tested in accordance with the tests proposed in UNE EN 12350-3 or UNE 83503.

TITLE 4. DURABILITY

CHAPTER 7. DURABILITY

Article 37. Durability of concrete and reinforcements

37.2.4 Covers

The use of concrete reinforced with fibres with a structural function eliminates the need to use mesh reinforcement which the Guidelines require to be placed in the middle of covers exceeding 50 mm.

37.2.8 Use of fibre-reinforced concrete (this part does not correspond to any corresponding article in the Code)

In general, fibre-reinforced concrete may be used in all exposure classes. In the general exposure classes IIIb, IIIc and IV and in specific exposure class F, its use must be justified by means of experimental tests where carbon steel fibres are used. A viable alternative is to use stainless, galvanised or corrosion-resistant steel.

In the case of specific exposure classes due to chemical attack (Qa, Qb and Qc), steel and synthetic fibres may be used following a study proving the non-reactivity of the chemical agents with these materials (not including the concrete).

37.3.6 Resistance of the concrete to erosion

In general, the use of steel fibres improves the resistance to erosion.

TITLE 5. CALCULATION

CHAPTER 8. MATERIAL DATA FOR THE DESIGN

Article 39. Characteristics of concrete

39.2. Classification of concrete

Concretes shall be classified using the following format (which must be included in the design drawings and in the Specific Project Technical Specifications for the design):

T - R / f-R1-R3 / C / TM-TF / A

where:

T Identifier which will be HMF for plain concrete, HAF for reinforced concrete and HPF for prestressed concrete

R Specified characteristic compressive strength, in N/mm^2
f Identifier of the type of fibre which will be A in the case of steel fibres, P in the case of polymer fibres and V in the case of glass fibre
R1,R3 Specified residual characteristic flexural strength $f_{R,1,k}$ and $f_{R,3,k}$, in N/mm^2
C Initial letter of the type of consistency, as defined in Article 31.5
TM Maximum aggregate size in millimetres, defined in Article 28.2
TF Maximum length of the fibre, in mm
A Designation of the environment, in accordance with Article 8.2.1

As regards the specified residual characteristic flexural strengths, it is recommended that the following series is used, provided that the minimum value required in Article 30.5 is exceeded:

1,0 - 1,5 - 2,0 - 2,5 - 3,0 - 3,5 - 4,0 - 4,5 - 5,0 - etc.

In this series, the figures indicate the specified residual characteristic flexural strengths of the concrete at 28 days, expressed in N/mm2.

Where the fibres have no structural function, the symbols R1 and R3 must be replaced by: "CR" in the case of fibres for shrinkage control, "RF" in the case of fibres for improving the fire resistance and "O" in other cases.

In the case of concretes designated by dosage, the following formula is recommended:

T - D - G/f/C/TM/A

where G is the fibre content, in kg/m^3 of the concrete, as prescribed by the applicant. The other parameters have the meaning indicated in the main articles. In this case, it must be guaranteed that the type, dimensions and characteristics of the fibres coincide with those indicated in the Specific Project Technical Specifications.

39.4 Design strength of concrete

The value of the corresponding characteristic design strength, $f_{R,1,k}$ and $f_{R,3,k}$, divided by a partial safety factor γ_c, which shall take the values indicated in Article 15, shall be regarded as the design residual flexural strengths of the concrete, $f_{R,1,d}$ and $f_{R,3,d}$. It is possible to work with residual tensile strengths, provided that the experimental validity of the approach is proven. Correlations with the bending results may be sought.

39.5 Design tensile stress-strain diagram of concrete with fibres

In order to calculate the sections subject to normal stresses in the Ultimate Limit States, one of the following diagrams shall be used:

- Rectangular diagram: In general, the diagram in Figure A.14.2, characterised by the design residual tensile strength, $f_{ctR,d}$, shall be used.

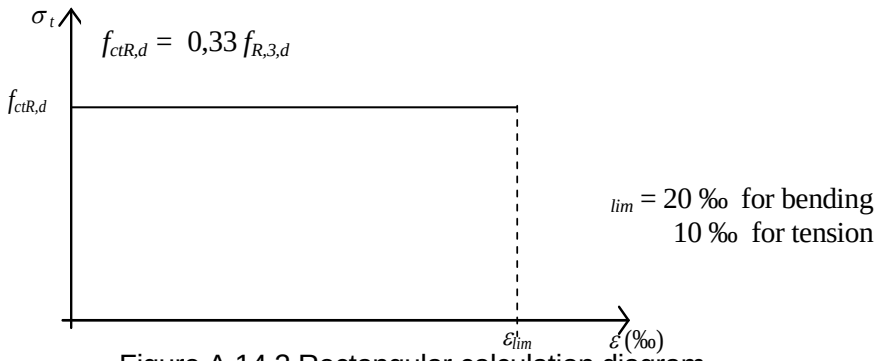

Figure A.14.2 Rectangular calculation diagram

- Multilinear diagram: For applications requiring an adjusted calculation, the stress (σ)- strain (ε) diagram in Figure A.14.3 shall be used, defined by a design tensile strength f_{ctd} and design residual tensile strengths $f_{ctR1,d}$ and $f_{ctR3,d}$, associated with both strains ε_1 and ε_2 under post-peak conditions, where:

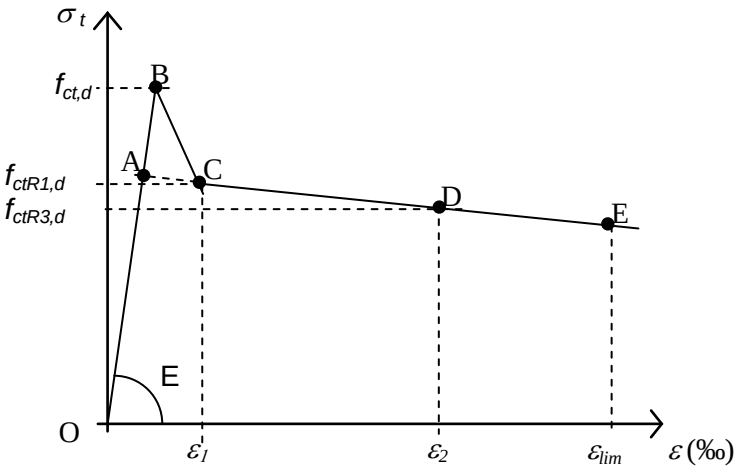

Figure A.14.3. Multilinear calculation diagram.

Where

f_L Load corresponding to the limit of proportionality

$f_{ct,d}$ = 0,6 $f_{ct,fl,d}$

$f_{ctR1,d}$ = 0,45 $f_{R,1,d}$

$f_{ctR3,d}$ = k_1 (0,5 $f_{R,3,d}$ - 0,2 $f_{R,1,d}$)

k_1 = 1 for sections subject to bending and 0,7 for sections subject to tension

ε_1 = 0,1 + 1000*$f_{ct,d}$ / $E_{c,0}$

ε_2 = 2,5/l_{cs}

ε_{lim} = 20‰ for sections subject to bending and 10‰ for sections subject to tension

l_{cs} Critical length (in metres) of the calculated element which may be determined using the expression

l_{cs} = min (s_m, h - x)

where: x = depth of the neutral axis

h-x = distance from the neutral axis to the most highly tensioned end

s_m = mean distance between cracks. Unless justified data is available, the values in Table A.14.1 may be used for s_m.

Table A.14.1 Reference values for s_m

Elements without traditional reinforcement or with very little reinforcement and fibre concrete with a bending behaviour with softening ($f_{R,1} < f_L$ and $f_{R,2} < f_L$)	H (depth of the member)
Fibre-reinforced concrete, with $f_{R,3,d} < 2$ kN/mm^2	s_m calculated in accordance with Article 49.2.4
Elements with fibre concrete with a bending behaviour with hardening ($f_{R,1} > f_L$ and/or $f_{R,2} > f_L$)	Shall be determined experimentally as indicated in Article 31.3
Other cases	The specialised bibliography shall be consulted

Note: To simplify matters, elements with very little reinforcement shall be regarded as those in which the geometric quantity of traditional tension reinforcement is less than one per thousand.

The effect of the A-B-C peak may be important when a non-linear analysis is carried out, particularly for small strains. In other cases, the simplified bilinear diagram, formed of the straight lines corresponding to the elastic section O-A and the extension of the straight line C-E to point A, and also considering a rigid behaviour with E = ∞, may be used for the fracture calculation.

Other calculation diagrams shall be accepted provided that the results obtained using these satisfactorily coincide with the results produced by the rectangular diagram indicated in Figure A.14.2 or are on the safe side.

39.8 Creep of concrete

When using synthetic fibres for structural purposes, the manufacturer must indicate the concrete's coefficient of creep, with the results being confirmed experimentally.

39.9 Poisson's rate

The fibres individually or as a group must have a Poisson's rate similar to that of concrete if the mesh effect is to be taken into account at structural level.

CHAPTER 10. ULTIMATE LIMIT STATE CALCULATIONS

Article 42. Failure Limit State under normal forces

42.1.2 Basic assumptions

The ultimate loadbearing capacity of sections in which the fibres have a structural function shall be calculated using any of the diagrams defined in Article 39.5 as a calculation diagram for concrete under tension.

42.1.3 Deformation domains

These are deemed to be the same as for a structure with conventional concrete.

42.2.2 Concrete confinement effect

Fibres with a structural function provide a concrete confinement effect similar to that of transverse reinforcements. In order to quantify the confinement effect produced by the fibres, the specialised bibliography must be consulted.

42.3.2 Simple or compound bending

In those cases where fibres with a structural function are used, either alone or in combination with traditional reinforcement, the following limitation must be observed:

$$A_p\ f_{pd}\frac{d_p}{d_s} + A_s\ f_{yd} + \frac{z_f}{z}A_{ct}\ f_{ctR,d} \geq \frac{W_1}{z}f_{ctm} + \frac{P}{z}\left(\frac{W_1}{A} + e\right)$$

where:

$z_f\ A_{ct}\ f_{ctR,d}$	Contribution of the fibres
z_f	Lever arm for the tension in the concrete
A_{ct}	Tensioned area of the concrete
$f_{ctR,d}$	Design residual tensile strength in the rectangular diagram

In the case of rectangular sections with or without passive reinforcement, the following simplified expression may be used in which there is no need to determine the tensioned area of the concrete.

$$A_s\ f_{yd} + 0{,}4\ A_c\ f_{ctR,d} \geq 0{,}04\ A_c\ f_{cd}$$

This limitation is justified as a guarantee to prevent fragile fracture of the concrete. The action of the traditional reinforcements and the fibres is complementary in this respect and therefore the limitation constitutes a minimum fibre content requirement for elements without traditional reinforcements and the possibility of reducing, and even eliminating, the requirement for minimum traditional reinforcements in elements with a sufficient content of structural fibres. This limitation does not apply for slabs resting on the ground.

42.3.4 Simple or compound tension

In the case of concrete sections subject to simple or compound tension which contain two main reinforcements and fibres, the following limitation must be observed:

$$A_p\ f_{pd} + A_s\ f_{yd} + A_c\ f_{ctR,d} \geq 0{,}20\ A_c\ f_{cd}$$

42.3.5 Geometric ratios (amount of reinforcement)

The values in Table 42.3.5 of the minimum geometric ratios which must be provided in all cases in the various types of structural element, depending on the steel used, may be reduced in the case of concrete with fibres by an equivalent mechanical quantity:

$$A_c\ f_{ctR,d}$$

where: A_c and $f_{ctR,d}$ have the meaning given above.

Article 44. Failure Limit State under shear

44.1 Failure ULS due to shear forces: General considerations

The contribution of the fibres shall be taken into account in the loadbearing capacity of the tie rods.

44.2.3.2.3. Fibre-reinforced concrete members with and without shear reinforcement (this part does not correspond to any article in the Code)

Where there are bent longitudinal bars which are taken into account in the calculation as shear reinforcement, at least one-third of the shear strength must be provided by the contribution of the steel fibres or, where applicable, by the joint contribution of the steel fibres and vertical stirrups. In all cases, the minimum quantity of shear reinforcement is established and shall be provided as indicated in Article 44.2.3.4.1 of this Code.

The failure shear stress due to tension in the web is equivalent to:

$$V_{u2} = V_{cu} + V_{su} + V_{fu}$$

where:

V_{cu} Contribution of the concrete to the shear strength given in Article 44.2.3.1.

V_{su} Contribution of the transverse reinforcement of the web to the shear strength. Same as Article 44.2.3.2.2.

V_{fu} Contribution of the steel fibres to the shear strength.

$V_{fu} = 0{,}7\ \xi\ \tau_{fd}\ b_0\ d$

where:

$\xi = 1 + \sqrt{\frac{200}{d}}$ with d in (mm) and $\xi \leq 2$ (same as Article 44.2.3.2.1)

τ_{fd} Design value of the increment in shear strength due to the fibres, taking the value: $\tau_{fd} = 0{,}5\ f_{ctR,d}$ (N/mm^2).

In the case of T-sections, the contribution of the flanges may be taken into account through a multiplying coefficient k_f in the expression of V_{fu}. This coefficient may be determined using the following expression:

$$k_f = 1 + n \cdot \left[\frac{b_f}{b_0}\right] \cdot \left[\frac{h_f}{d}\right] \text{ with } k_f \leq 1{,}5$$

where:

h_f Height of the flanges in mm
b_f Width of the flanges in mm
b_0 Width of the web in mm

$n = \frac{b_f - b_w}{h_f} \leq 3$ and $n \leq \frac{3 \cdot b_w}{h_f}$

44.2.3.4.1 Transverse reinforcements

The minimum quantity of shear reinforcement, whether in the form of Steel Fibre-Reinforced Concrete and/or vertical stirrups, shall be provided where the following ratio is met:

$$V_{su} + V_{fu} \geq \frac{f_{ct,m}}{7{,}5} b_0\, d$$

44.2.3.4.2 Longitudinal reinforcements

In the case of structures made of concrete reinforced with fibres with a structural function; (V_{su}+V_{fu}) must be used in the expressions in the main article in place of V_{su}.

44.2.3.5 Longitudinal shear between the flanges and web of a beam

It has been confirmed experimentally that fibres with a structural function can significantly contribute to the resistance of flange-web longitudinal shear stress. In order to take account of this contribution, conclusive experimental campaigns or endorsed scientific publications must be used.

Article 46. Failure Limit State due to punching

46.6 Fibre-reinforced concrete slabs (this part does not correspond to any article in the Code)

Fibres can improve punching strength. An initial approach is to take account of their contribution by using a loadbearing stress in the critical surface equivalent to:

$$\tau_{fd} = 0{,}5\ f_{ctR,d}\ \ (\mathrm{N/mm^2})$$

However, this value may be significantly higher, but this must be proven experimentally if it is to be used.

Article 47. Failure Limit State due to longitudinal shear stress in joints between concretes

47.3 Provisions in relation to reinforcements

It shall only be considered that the fibres contribute to the slip resistance in the case of joints which are strengthened transversely, where the dimensions of the keys are comparable to that of the fibre itself.

TITLE 7. EXECUTION

CHAPTER 13. EXECUTION

Article 69. Reinforcement production, reinforcing and assembly processes

69.5.1. Anchorage of passive reinforcements
69.5.1.1. General

Fibres improve the anchorage characteristics where these are used together with passive and active reinforcements. This factor may be taken into account in the calculations in this article provided that this is confirmed by experimental tests which prove that this is the case.

Article 71. Production and use of concrete

71.3 Production of concrete

71.3.2. Dosage of constituent materials

71.3.2.4. Water

The increase in the consistency due to the use of fibres must always be offset by the addition of water-reducing admixtures, without altering the specified water dosage.

71.3.2.6. Fibres (this part does not correspond to any article in the Code)

The effectiveness of the various types of fibre can vary a great deal. As a result, it is recommended that the concrete is designated by its properties and that the type and dosage of fibres are defined in the prior tests. Although a minimum fibre content is not specified, when steel fibres with a structural function are used, it is not recommended to use dosages less than 20 kg/m^3 of concrete.

The selection of the type and dosage of fibres will depend on their effectiveness and their influence on the consistency of the concrete. The maximum length will comply with the conditions stipulated in this Annex. The increase in slenderness of the fibres and the use of high dosages can increase their mechanical efficiency, but can also cause a reduction in the consistency and a greater risk of the formation of fibre balls which separate from the concrete (“hedgehogs").

The upper limit of the fibre content is set at 1,5% by volume of the concrete. The use of very high dosages requires the granular structure of the concrete to be significantly altered. For these cases, it is recommended that the specialised bibliography is consulted.

The provisions in the Chapter on materials in this Annex must be taken into account. The fibre dosage shall be determined by weight.

When fibres are used, the fibre dosage shall be determined by weight, using weighing machines and scales other than those used for aggregates. Where automatic dosing machines are used, these must be calibrated with the frequency determined by the manufacturer. The fibre weight tolerance shall be ±3 per 100.

71.2.4. Mixing equipment

The check that the mix produced by a fixed or mobile mixer is uniform must include the verification that the maximum difference tolerated between the fibre content results determined according to UNE 83512 -1 or UNE 83512 -2 from two samples taken from the concrete discharge (1/4 and 3/4 of the discharge) is less than 10%.

71.3.3. Mixing

Mixing is a critical phase in producing concrete with fibres due to the risk of tangling of the fibres, thus forming “hedgehogs”. This risk can be reduced by good dosage with a sufficient content of fine aggregate, but is increased by excessively long transport and particularly when the fibre content is high and these are very slender. The filling order may also be decisive. As a general rule, fibres must be added together with the aggregates, preferably with the coarse aggregate at the start of the mix. It is not advisable to make the fibres the first component of the mix.

In the case of steel fibres, when the concrete is to be transported over a long distance, the addition of fibres on site may be proposed. As a result, a sufficiently fluid concrete must be provided to facilitate the travel of the fibres to the bottom of the drum and an on-site dosing system must be provided which guarantees the accuracy indicated in Article 71.2.3. The fibres must be poured in slowly (between 20 and 60 kg per minute) with the drum rotating at its maximum speed until the uniform distribution of the fibres in the mass of concrete is guaranteed.

71.3.4. Designation and characteristics

Concrete produced at a concrete-mixing plant may be designated by its properties or by its dosage. In both cases, for concrete with fibres, the following must at least be specified:

- Material forming the fibres, and their maximum length
- In the case of fibres with a structural function, the specified residual characteristic tensile strengths due to bending $f_{R,1,k}$ and $f_{R,3,k}$, in N/mm^2

- In the case of fibres without a structural function, the functions of the fibres or the characteristics of these guaranteeing their effectiveness for this purpose.

71.4.2. Supply of the concrete

The delivery note must contain the following data:

- Specification of the concrete: Designation in accordance with section 39.2.
- Material, type, dimensions (length, characteristics of the section and equivalent diameter, slenderness) and characteristics of the shapes (shaped at the ends, undulated, etc.) of the fibres.
- Fibre content in kilograms per cubic metre (kg/m^3) of concrete, with a tolerance of ±3%.

The list of the fibre characteristics may be replaced by a reference to their full commercial designation, supported by a data sheet previously accepted by the Technical Management and available in the site book.

71.5 Placing of concrete

71.5.1. Pouring and placing of concrete

Concrete must be poured and placed in such a way that no additional transport of the concrete on site is required. Interruptions in the concreting must be avoided as these could cause irregularities in the distribution of the fibres.

When the concrete is placed on site using a hopper, the diameter of the discharge outlet must be greater than 30 cm to facilitate pouring.

71.5.2. Compacting of concrete

Due to the fact that using fibres reduces the workability of concrete, greater compacting energy will be required. However, the response to vibration of concrete with fibres is better than that of a traditional concrete which is why, for the same slump in the Abrams cone, a shorter vibration time is required.

Compacting leads to a preferential orientation of the fibres. In general these tend to settle parallel to the surface resting against formwork, particularly if surface vibrators are used. This effect is only local but may be significant in thin elements.

The use of internal vibrators may generate zones with too much concrete and too few fibres in the zone where the vibrator has been placed, and also some orientation in the direction tangential to the external diameter of the vibrator.

TITLE 8. CONTROL

CHAPTER 16. CONFORMITY CONTROL OF PRODUCT

Article 85. Specific criteria for checking the conformity of the component materials of the concrete

85.6 Other concrete components (this part does not correspond to any article in the Code)

85.6.1 Specifications (this part does not correspond to any article in the Code)

Are those corresponding to Articles 29 and 30 and the ones that the Project Technical Specifications could include.

85.6.2 Tests (this part does not correspond to any article in the Code)

- Before to the start of the works the effect of fibers will be checked according to the tests referred in Article 86. Consequently, the trade marks, tipes and fibre doses being admissible. The continuity of the composition and the characteristics shall be guarantied by the corresponding Producer.
- Along the period of execution of the work it shall be controlled that the fibres used are those accepted as in the previous paragraph.
- The Work Management could require, if necessary, the checking of the properties exigible to the fibres.

85.6.3 Aceptation or rejection criteria

Failure of any of the specifications will be a sufficient condition to qualify the fibre as ones not suitable for the concretes.

Any possible modification of the commercial mark, the type or the dosage of the fibres that is going to be used, with regard to what has been accepted in the tests prior to the beginning of the work, will imply their non use until, after the accomplishment with these modifications of the tests foreseen in 81.4.2, Project Manager authorizes their acceptance and use in the work.

Article 86. Control of the concrete

The control of the quality of the concrete of fibres will include that of the type and contents of fibres, and in the event of fibres with structural function, that of their residual strength according to the method that establishes the Project Technical Specifications, besides the control specified in the articles in this Code.

86.1. General criteria for the conformity control of the concrete

Where the fibres had a structural function, in adition to the tests specified in the articles,the flexural test of three speciments for each batch used for control, according to UNE-EN 14651, had to be done in order to determine the values of the residual strength $f_{R,1,m}$ *y* $f_{R,3,m}$ at 28 days of age. The fibre content, according to UNE 83512-1 o UNE 83512-2 , shall be obtained In every batch.

When according to specifications in 30.3, other types of alternative tests are selected for the control of the residual flexural strength of the concrete; these will have to be contrasted by a concluding experimental campaign. The Project Manager will determine previously the values of reference to obtain during the tests and the criteria of acceptance and rejection.

According to has been indicated in the part of materials of this Annex, Project Manager will be able to value, under his responsibility, the use of other procedures that facilitate the control, as it can be the case of the Barcelona test of double punching, carried out on cilinder speciment of 15 x 15 cm.

86.3. Testing

In the case of concretes of fibres with consistency less below 9 cm of seat in the Abrams cone it is recommended to use other methods as the Consistometer Vb in agreement with EN 12350-3 or the inverted cone according to UNE 83503.

86.3.2. Tests on the strength of the concrete

Before the beginning of the concreting the accomplishment of previous tests or characteristic tests, which are respectively described in the Articles 86 and 87, is necessary.

When there is experience, well documented and sufficient, so much in materials, included the type and trademark of the planned fibres, as in dosage and instalations (for example the concrete mixing plants), only the test for control would be neccesary.

86.5.5. Control of the strength of the concrete at 100%

The criteria of definition of lots will coincide with what has been specified in the articles.

The control of the residual flexural strength to flexotracción as UNE-EN 14651 will be carried out on 2 batches by lot. In these batches the control of the contents in fibres will be done as UNE 83512-1 or UNE 83512-2.

When the result of the control of contents in fibres in one batche of the lot was inferior by 10% to the stipulated value, the control of residual flexural strength shall be extended to all the batches on which samples are taken for determining the compressive resistance of the concrete.

The analysis of results and the estimators to use to obtain the corresponding characteristic values from the results of the tests will be the same that the ones included in the Articles for the resistance to compression.

86.5.6. Indirect control of the strength of the concrete

This tipe control does not apply to the concretes with fibres with structural function.

86.7. Decisions arising from the control

When in a lot of a work with strength control implemented, it happens $f_{R,j,est} \geq f_{R,j,k}$ such lot shall be accepted.

If were $f_{R,j,est} < f_{R,j,k}$,, for lack of an explicit forecast of the case in the Project Technical Specificationss of the work and without prejudice of the planned contractual sanctions (to see 4.4), it will be proceeded as it follows:

- If Si $f_{R,j,est} \geq 0,9\ f_{R,j,k}$,, the lot will be accepted.
- If $f_{R,j,est} < 0,9\ f_{R,j,k}$,, it will be proceeded to carry out, for decision of the Project Management or at the request of any of the parts, the studies or pertinent complementary tests.

If it would be detected some variation in the aspect, dimensions or shape of the fibres, the preliminary tests would be performed again.

86.8. Tests on additional information for the concrete

The extraction of core samples, carried out in accordance with Article 101, leads to cylindrical speciments on those that can not be applied the tests of reference for the determination of the mechanical flexural characteristics of the concrete of fibres. Since this verification will not be able to be carried out, it can be replaced by other tests that allow estimating the resilience of the concrete as, for example, the Barcelona test of double punching.

CHAPTER 17 CONTROL OF THE CONSTRUCTION

Article 92. General criteria for the control of the construction

In the table 92.5, the following construction units, specific of fibre concretes, shall be included:

- Type of fibres used alter the control of fibres contents
- Storage conditions for fibres
- Procedure to add fibres to the concrete mix

The maximum sizes of these inspection units shall be defined in the corresponding project, depending on the characteristics of the work.

A 22. Preliminary and characteristic tests of concrete

A22.1 Preliminary tests

In concretes with fibres the preliminary tests take special importance for the definition of the fibres to use and their dosage. When the fibres had structural function the preliminary tests will include the preparation of at least four series of of speciments proceeding from different batches, of six speciments each for test at the 28 days of age, by every dosage that it is wanted to establish, and will be operated in agreement with UNE-EN 14651 to determine the average values of the residual flexure strength:

$$f_{R,1,m} \; y \; f_{R,3,m}.$$

In order to define the values of resistance to be obtained in the preliminary tests, when the coefficient of variation of this test is unknown, only as an informative reference, it can be taken as:

$$f_{R,j,k} = 0,7 \, f_{R,j,m}$$

A22. 2 Characteristic tests for strength

When the fibres have structural function the tests will include, besides the ones specified in the Articles, the test of three speciments per batch in agreement with UNE-EN 14651 to determine the values of the residual flexural strength $f_{R,1,m}$ y $f_{R,3,m}$, at the 28 days of age. In every batch of this type will be determined also the contents in fibres UNE 83512-1 or UNE 83512-2.

The analysis of results and the estimators to use to obtain the corresponding characteristic values from the results of the tests will be the same ones referred in the Articles for the resistance to compression.

ANNEX 15

Recommendations for using recycled concrete

1 Scope

For the purposes of this Annex, recycled concrete (RC) is defined as concrete manufactured using coarse recycled aggregate from processed concrete waste.

For its application in structural concrete, this Annex recommends limiting the content of coarse recycled aggregate up to 20% by weight out of the total weight of coarse aggregate. With this limitation, the final properties of recycled concrete are hardly affected compared to results obtained for conventional concrete. For higher percentages, special studies and complementary experiments are required for each application. The Annex gives information on some of the concrete properties that may be affected with substitutions greater than the indicated limit.

This document only considers the points that complement the requirements set out in the various articles of this Code or that replace them in certain cases. Other specifications that do not contradict those laid down in the Annex remain in force.

Recycled aggregate may be used for mass concrete and reinforced concrete with characteristic strength no greater than 40 N/mm^2 while its use in prestressed concrete is excluded.

The following types of concrete are outside the scope of this annex:

- Concrete manufactured using fine recycled aggregate.
- Concretes manufactured using recycled aggregates of a nature other than concrete (mainly ceramic, asphalt aggregates, etc.).
- Concretes manufactured using recycled aggregates from concrete structures with conditions that affect the quality of the concrete such as alkali-aggregate, sulphate attack, fire, etc.
- Concretes manufactured using recycled aggregates from special concretes such as aluminium concretes, fibre-reinforced, polymer-reinforced, etc.

2 Complements to the text of this Code

Recommendations for use of recycled concrete are indicated below with reference to the Titles, Chapters, Articles and Sections of this Code

TITLE 1. BASIS OF DESIGN

CHAPTER III Actions

Article 10 Characteristic values of actions

10.2 Characteristic values of permanent actions

In the case of recycled concretes with a recycled aggregate percentage less or equal than 20%, the characteristic values of the deadweight are obtained from the same density value laid down in this Guidelines.

- Mass concrete 2,300 kg/m^3
- Reinforced concrete 2,500 kg/m^3

For recycled coarse aggregate percentages greater than 20%, the resulting density of the recycled concrete is less than that of conventional concrete of the same density as a recycled aggregate due to the mortar that remains attached to the natural aggregate. The higher the percentage o recycled aggregate used, the lower the density of concrete. For total replacement of coarse aggregate, the reductions are therefore between 5-15% of the density of a conventional concrete.

TITLE 3. TECHNICAL PROPERTIES OF MATERIALS

CHAPTER IV Materials

Article 26 Cement

The type of cement used in the manufacture of concretes with recycled aggregate shall be the same as used in a conventional concrete for the same application.

Article 28. Aggregates

28.1 General

The combination of natural and recycled coarse aggregate shall satisfy the specifications laid down in Article 28 of this Code. This Annex sets out the requirements to be met by recycled coarse aggregates and also those specifications laid down for natural aggregates to ensure the mixture of both complies with the requirements laid down in Article 28.

In general, test methods laid down in this Code shall be used for recycled aggregates although in some cases change may be necessary as indicated in the corresponding sections.

Natural aggregates or obtained from ground rocks may be used to manufacture recycled concrete.

It is considered that recycled aggregates obtained from normal structural concretes or from high strength concretes are sufficient for the manufacture of structural recycled concrete although a check shall be carried out to ensure they meet the specifications laid down in the following sections.

Recycled aggregate batches shall provide a document identifying the waste source that includes the following aspects:

-nature of material (mass concrete, reinforced concrete, concrete mixture, etc.),

-aggregate production plant and waste carrier company,

-presence of impurities (ceramics, wood, asphalt),

-details on source (origin or type of structure obtained from),

-any other information of interest (cause of demolition, chloride contamination, concrete affected by alkali-aggregate reactions, etc.).

Separate and identified stockpiles shall be established for recycled aggregates and natural aggregates.

It is advisable for recycled aggregates from concretes of very different qualities to be stored separately due to the fact that the quality of the original concrete affects the quality of the recycled aggregate, obtaining aggregates with improved properties from high quality concretes. One possible distinction may be to store waste from structural concrete or high strength concrete separately from that obtained from non-structural concrete to permit greater uniformity in the properties of the produced recycled aggregates.

28.2 Designation of aggregates

Recycled aggregates shall be designated with the format laid down in Article 28 of this Code, and shall be designated "R" in the "Nature" section.

28.3 Maximum and minimum aggregate sizes

The minimum permitted size for recycled aggregate is 4 mm.

28.4 Aggregate particle size grading

Plants producing recycled aggregates generally obtain a coarse fraction with an appropriate shape coefficient, flakiness index and grading within the limits recommended for its use in structural concrete.

Recycled aggregates shall display an undersize particle content less than or equal to 10% and a content of particles passing through a 4 mm screen no greater than 5%.

The undersize particle content of recycled aggregate is usually greater than that of natural aggregates due to the fact that these may be generated after sieving during storage and transport due to their greater friability. The fine recycled fraction is also characterised by its higher content of mortar, that negatively affect the quality of the concrete. This is the main reason why their use is restricted in the application of structural concrete.

28.6 Physical-mechanical requirements

In recycled concrete with a content of recycled aggregate no greater than 20%, the content of clay lumps shall be no greater than 0.6% and that of natural coarse aggregate no greater than 0.15%.

If recycled concrete includes recycled aggregate quantities greater than 20%, precautions shall be taken during its production to eliminate as far as possible soil impurities within the raw material and ensures that the combined aggregate complies with the specifications in this Code. In the extreme case of using 100% recycled coarse aggregate, this shall meet the maximum specification of 0.25% of clay lumps.

28.6.1 Physical-mechanical requirements

In recycled concrete with a recycled aggregate content no greater than 20%, the absorption of recycled aggregate shall be no greater than 7%. The absorption of natural coarse aggregate shall also be no greater than 4.5%.

The requirement for the recycled aggregate abrasion resistance is the same as for natural aggregates (Los Angeles coefficient no greater than 40%).

In recycled concretes with more than 20% of recycled aggregate, the combination of natural aggregate and recycled coarse aggregate shall comply with the specifications laid down in this Code with an absorption of water no greater than 5%.

As a first check in a production plant, to estimate the water absorption of recycled aggregates, an absorption test may be carried out after 10 minutes that should be less than 5.5% for recycled aggregate applications no greater than 20%.

In the case of concrete exposed to freezing environments, to determine the maximum weight loss experienced by recycled aggregates when they are subject to treatment cycles with magnesium sulphate solutions, the sample shall be prepared beforehand by washing and sieving vigorously through a 10 mm sieve to eliminate all friable particles prior the test procedure described in UNE-EN 1367 Part 2. The limit to the test result laid down in this Code for natural aggregates shall also be applied to recycled coarse aggregates.

28.7 Chemical requirements

The specifications in the Article relating to the chloride content and sulphate content shall be maintained.

Recycled aggregates may include impurities and contaminants that negatively affect concrete properties. These contaminants may be very varied, e.g. plastic, wood, plaster, brick, glass, organic material, aluminium, asphalt, etc. These impurities cause in all cases a decrease of compressive strength in concrete. Also, depending on the type of impurity, other problems may arise such as alkali-aggregate reactions (glass), sulphate attack (plaster), “pop-out” (wood or paper), high shrinkage (clay soils) or a low resistance to thaw-freeze (some ceramic materials).

The impurity contents shall be checked in the recycled aggregate, establishing the maximum values given in Table A15.1:

TABLE A.15.* Maximum impurities content in recycled aggregates

Elements	Max. Impurity content % of total sample weight
Ceramics	5
Lightweight particles	1
Asphalt	1
Other materials (glass, plastics, metals, etc.)	1,0

28.7.1 Chlorides

Recycled aggregates may have an appreciable content of chloride depending on the source of the concrete used as a raw material, particularly in concretes from maritime works, bridges or pavements exposed to de-icing salts. Concretes that have been manufactured using accelerant additives may also contain a high level of chlorides.

It is advisable to determine the total chloride content instead of the water-soluble chloride content, applying the same limit laid down in this Code for the latter. This is due to the possibility

of certain combined chlorides that in certain circumstances may be reactive and attack the reinforcement. UNE-EN196-2 may be used to determine total chloride in recycled aggregate.

28.7.4 Organic material compounds that alter the setting and hardening rates of concrete

The test method included in UNE-EN 1744-1 for determining the content of lightweight particles present several problems when used in recycled aggregates because the solution becomes clouded with soil particles and its density changes. This means that the samples must be washed beforehand and then dried before the test is carried out.

28.7.6 Alkali-aggregate reactivity

The recycled aggregates will not present potential reactivity with the alkalis in concrete. In the case of recycled aggregates obtained from a single concrete of controlled source, i.e. concretes of known composition and characteristics, the same verifications established in this Code articles shall be carried out. In the case of recycled aggregates from different source concretes, these shall be considered potentially reactive.

Article 29 Admixtures

In recycled concretes with substitutions greater than 20%, the use of admixtures that modify rheology is recommendable to improve workability since it makes up for the higher water absorption by recycled aggregate when this is used in a dry state.

Article 30 Additions

Additions may be used under the same terms indicated in the article.

TITLE 4. DURABILITY

CHAPTER VII Durability

Article 37 Durability of concrete and reinforcements

37.2.4 Reinforcement covers

This Code set out minimum concrete cover depending on its strength and the exposure class, which are applied for concretes with a recycled aggregate content no greater than 20%.

For concretes with a higher recycled aggregate content, the cover in this Code may be maintained if the concrete mix design adopted guarantee a similar durability to that required in this Code for conventional concrete in each exposure class, as indicated in article 37.3 for corrosive environments by means of the relevant studies.

Only in the case of maintaining the same concrete mix as for conventional concrete may it be necessary to provide thicker cover to compensate the increased porosity of the recycled concrete, according to the specific studies carried out in each case.

37.3. Durability of the concrete

The durability of recycled concrete with a recycled aggregate content no greater than 20% is similar to that of a conventional concrete as far as the specifications in the article are applicable.

The higher porosity of recycled aggregate makes the recycled concrete incorporating such aggregate more susceptible to environmental effects, however, which means special measures shall be adopted when used in corrosive environments with percentage of recycled aggregate greater than 20%. This behaviour shall be taken into account in the concrete mix by increasing

the cement concrete or reducing the water/cement ratio. Another possibility is to increase the reinforcement cover required in certain corrosive environments.

37.3.2. Limitation on water and cement content

In recycled concrete containing more than 20% of recycled aggregate, the values laid down in Table 37.3.2.a may be insufficient and it may be advisable to adjust the concrete mix proportion to ensure the requirements referring to the water penetration test results as laid down in this article are complied with for all exposure classes except I and IIb.

For substitutions of recycled aggregate greater than 20%, the minimum strength compatible with the durability requirements may be greater than those set out in table 37.3.2.b.

37.3.4. Frost resistance of concrete

When the recycled concrete is subject to exposure class H or F, the recycled aggregates shall comply with the specification relating to stability of aggregates to sodium sulphate or magnesium sulphate solutions.

When the recycled concrete is subject to exposure class H or F, a minimum air entrained content of 4.5% shall be introduced.

In the case of concrete containing more than 20% of recycled aggregates, special tests shall be carried out with the recycled concrete mix design adopted.

37.3.5. Sulphate-resistance of concrete

In this type of exposure class, the use of recycled aggregate is dependent on knowledge of the source of the original concrete, which must have been manufactured with sulphate-resistant cement.

37.3.6. Seawater resistance of concrete

In this type of exposure class, the use of recycled aggregate is dependent on knowledge of the source of the original concrete, which must have been manufactured with sea water-resistant cement.

37.3.7. Erosion resistance of concrete

The recycled aggregate shall comply with the specifications set out in the article in the Los Angeles coefficient, which shall be less than 30%.

The limitation established for the Los Angeles coefficient is difficult to comply with in recycled aggregates because they usually display higher abrasion due to the adherent mortar.

37.3.8. Alkali-aggregate reactivity resistance

In environments exposed to humidity, other than I and IIb, it is advisable to use recycled aggregates from a single concrete of controlled origin as set out in article 28.7.6 of this Annex. In this case, reactivity tests shall be carried out on the recycled and natural aggregate mixture to be used in the work.

In these environments and in the case of using recycled aggregates of different sources, the measures laid down in this Code for use of potentially reactive aggregates shall be applied as a precaution.

37.4. Corrosion of reinforcements

As with the other properties, concretes with a recycled aggregate content no greater than 20% display a satisfactory performance with regard to corrosion.

For concretes with recycled aggregate percentages greater than 20%, the corrosion protection is lower than that offered by conventional concrete with the same mix design and for this reason it is advisable to carry out specific tests in each case.

TITLE 5 DESIGN

CHAPTER VIII Information concerning materials to be used in structures

Article 39 Characteristics of concrete

39.1. Definitions

For recycled concrete with a recycled coarse aggregate no greater than 20%, the equations in the article for calculating tensile strength may be used. For substitution percentages higher than 20%, this property is hardly affected although the carrying out of tests is advisable in each case.

39.2. Identification of concretes

The code T indicates whether the concrete type will be HRM or HRA according to whether the concretes are mass or reinforced respectively, manufactured using recycled aggregates. As far as characteristic strength is concerned, it is advisable to use the series laid down in the article with the upper limit of 40 N/mm^2.

39.5. Design stress-strain diagram of concrete

The diagram in the article applies to recycled concretes with a coarse aggregate substitution percentage no greater than 20%.

For recycled aggregate percentages greater than 20%, two aspects of the stress-strain diagram may be affected:

On the one hand, there is an increase in peak strain sc1 as the recycled aggregate percentage increases due to the higher susceptibility of such aggregates to strain.

On the other hand, greater strength loss may occur, compared with conventional concrete, in tests under sustained loads.

In such cases it is therefore advisable to carry out specific studies to establish the design diagram to be used.

39.6. Modulus of elasticity of concrete

The equation and notes tables used in the article to calculate the modulus of elasticity of the concrete applies to concretes with a recycled coarse aggregate percentage no greater than 20%.

For recycled aggregate substitutions greater than 20%, the modulus of elasticity decreases progressively as the recycled aggregate percentage increases.

As a guideline and for 100% recycled coarse aggregate, the concrete modulus of elasticity shall be 0.8 times that of conventional concrete. Due to the change in quality of recycled aggregates, a high dispersion may nevertheless arise in the value of the modulus (since values even lower than that given may arise), which makes it advisable to carry out tests in each case.

39.7. Shrinkage of concrete

The article equation and tables and also the notes for estimating concrete shrinkage apply to concretes with a recycled coarse aggregate substitution no greater than 20%.

For recycled aggregate substitutions above than 20%, the shrinkage increases gradually as the recycled aggregate percentage increases. As a guideline and for 100% recycled coarse aggregate, shrinkage shall be 1.5 times that of a conventional concrete. Due to the change in quality of recycled aggregates, a high dispersion may arise in the shrinkage value (some values may be higher than indicated), which makes it advisable to carry out tests in each case.

39.8. Creep of concrete

The article equation and tables and also the notes, for estimating concrete creep rate apply to concretes with a recycled coarse aggregate substitution no greater than 20%.

For recycled aggregate substitutions above than 20%, the creep rate increases gradually as the recycled aggregate percentage increases. When calculating creep rate, this effect is shown through the decrease in the longitudinal modulus of elasticity as indicate in article 39.6 of this Annex. In this case, as a guide value for 100% recycled coarse aggregate, the creep coefficient shall be 1.25 times that of a conventional concrete. Due to the change in quality of recycled aggregates, a high dispersion may arise in the creep rate value (some values may be higher than indicated), which makes it advisable to carry out tests in each case.

CHAPTER IX Carrying capacity of struts, ties and nodes

Article 40. Carrying capacity of struts, ties and nodes

The resistant capacity of rods and nodes in recycle concretes with a recycled aggregate content no greater than 20% is the same as for conventional concretes.

For substitution percentages greater than 20%, the reduction in strength under sustained load may be significant: Specific tests are advisable in such cases as discussed in article 39.5.

CHAPTER X Design for ultimate limit states

Articles in this chapter apply to concretes with recycled aggregate substitutions no greater than 20%. In other cases, it is advisable to carry out specific studies in accordance with the remarks set out in articles 39 and 40.

CHAPTER XI Design for serviceability limit states

Article 49. Cracking Limit State

The contents of this article of this Code are maintained except with regard to maximum separation between stirrups that shall adopt a maximum value of 200 mm for recycled concrete with the aim of improving the response to cracking under a shear stress.

For coarse aggregate percentages higher than 20%, specific studies should be carried out or an experimental campaign should be developed.

Article 50. Deformation Limit State

In the case of recycled concrete with substitution no greater than 20% that is not particular susceptible to strain, the specifications laid down in the article apply.

In components highly susceptible to strain and particularly for recycled aggregate percentages higher than 20%, specific studies shall be carried out or an experimental campaign shall be applied in previous tests.

Article 51. Vibration limit state

In concrete elements with a substitution percentage no greater than 20% of recycled aggregate, the specifications in the article apply.

TITLE 6 STRUCTURAL ELEMENTS

CHAPTER XII Structural Elements

All the articles in this chapter take into account the considerations set out in this Annex.

TITLE 7. EXECUTION

CHAPTER XIII Execution

Article 69 Construction, reinforcing and assembly processes for reinforcements

69.5 Specific criteria for anchorage and splicing of reinforcements

For concretes with substitution percentage no greater than 20% of recycled aggregate, the specifications laid down in this article in this Code apply.

For substitutions higher than 20%, a slight reduction has been noted in the adherence capacity between the corrugated bars and recycled concrete. In the absence of specific experimental results, the following equation may be adopted for the basic anchorage length:

For bars in position I:

$l_b i=1,1nH^2>(f_{yk}/20)\ \phi$

For bars in position II:

$l_{bII} = 1,55\ m\phi^2 \geq (f_{yk}/14)\ \phi.$

Article 71 Elaboration and placing of concrete

71.2.3. Mix design installations

The water absorption of recycled coarse aggregate is high and it is therefore advisable to use aggregates in saturated conditions for concreting using more than 20% of recycled aggregates. To maintain the moisture content, systems that humidify the aggregate in conveyor belts may be installed in the mixing plants or water sprinklers in the aggregate hoppers.

71.3 Concrete elaboration

It is advisable for concrete containing recycled aggregate to be prepared in a mixing plant.

71.3.1. Supply and storage of component materials

Separate stockpiles shall be established and identified for recycled aggregates and natural aggregates.

71.3.2 Mix proportions of component materials

Normal mix design methods for conventional concretes apply to recycled concretes with a recycled aggregate percentage no greater than 20%. In any case, it is advisable to carry out previous tests to adjust the mix design.

In recycled concretes with substitution greater than 20% and due to the lower quality of recycled aggregates, concrete manufactured using recycled aggregates requires a higher content of cement or a lower water/cement ratio in the dosage to maintain the same strength and durability as for a conventional concrete.

Equally, to achieve the required consistency, it is usually necessary to add more water to the dose to compensate for the higher absorption of recycled aggregate. Other possibilities may be to use plasticizing or superplasticizing admixtures in the dosage or to presoak the recycled aggregate.

71.3.3. Mixing

Mixing concrete with recycled aggregates in a dry state may take longer than for conventional concrete. This allows the moistening of aggregates with the aim of preventing water absorption by the recycled aggregate affecting the concrete consistency.

The mixing time must nevertheless not be excessively extended to prevent the generation of fines due to the friability of the attached mortar of the recycled aggregate. It is advisable to adjust the mixing time by carrying out characteristic tests.

71.3.4 Designation and characteristics

When designating the recycled concrete, the designation shall show that the product is concrete manufactured using recycled aggregates as specified in section 39.2 of the present Annex.

71.4 Transport of concrete

The transported recycle concrete volume shall not exceed two thirds of the total volume of the transporter drum in any case.

In concretes with substitutions greater than 20% of recycled aggregate, it may be advisable to carry out characteristic tests to evaluate the change in consistency during transport and make up for this change by adding plasticizing or superplasticizing admixture on site following the concrete manufacturer's guidelines.

71.5. Placing of concrete

In the case of pumped concrete, the pumping pressure may alter the homogeneity of recycled concrete characteristics due to its effect on water absorption of recycled aggregate. The concrete mix design shall, therefore, be adjusted by carrying out characteristic tests and taking samples at the pipe output.

TITLE 8 CONTROL

CHAPTER XV Control of materials

Article 79. Conditions for the conformity of the structure

79.3.1 Documentary control of supplies

When the recycled aggregate comes from a single origin concrete, the control required shall be the same as laid down in the article for conventional aggregates.

The greater heterogeneity usually presented by recycled aggregates when are obtained from various types of original concretes make it necessary to carry out greater control of their properties, especially those that are most unfavourable in this type of aggregate such as absorption, fine content, undersize fraction and impurity content.

In this case, the frequency of production control tests determined on the basis of time or recycled aggregate quantity shall be defined by the most conservative criteria of those set out in the following table:

TABLE A 15.2 Production inspection test frequency

PROPERTY	STANDARD	FREQUENCY	
Grading. Undersize fraction components	UNE-EN 933-1	1/week	Every 2000 t.
Shape index	UNE-EN 933 -4	1/month	Every 10000 t.
Fine content	UNE-EN 933-2	1/week	Every 2000 t.
Los Angeles coefficient	UNE-EN 1097-2	1/month	Every 2000 t.
Absorption	UNE-EN 1097-6	1/week	Every 2000 t.
Stability to $MgSO_4$ solution (*)	UNE-EN 1367-2	1/ 6 months	Every 10000 t.
Clay lumps	UNE 7133	1/week	Every 2000 t.
Lightweight particles	UNE 7244	1/ month	Every 10000 t.
Determination of sulphur compound (SO_3)	UNE-EN 1744-1	1/ 3 month	Every 10000 t.
Determination of acid-soluble sulfates (SO_3)	UNE-EN 1744-1	1/ 3 month	Every 10000 t.
Determination of total chloride	UNE-EN 1744-1	1/ 3 month	Every 10000 t.
Impurity content	EN 933-11	1/week	Every 2000 t.

(*) Only applicable in frost or de-icing salt environment

CHAPTER XVI

Article 86. Concrete control

86.4. Control prior to construction

Experience with conventional concrete mixing is not directly applicable to recycled concrete and previous tests are therefore very advisable. These tests shall also be used to analyze the feasibility and advisability of presoaking the aggregate prior to its use.

When carrying out these tests, the process and level of saturation to be reached shall be adjusted to reduce the variation in consistency between batches.

In the case of recycled concrete, the strength to be achieved in these tests to ensure that the characteristic strength of the work is satisfactory may be somewhat higher than expected with conventional concrete, taking into account the increase in dispersion of results due to a lack of uniformity of the recycled aggregate used. When carrying out tests, it is therefore advisable to use recycled aggregates of different qualities within permissible limits.

In elements particularly susceptible to strain or when using recycled aggregate percentages higher than 20%, it is advisable to include tests within the overall set of tests that determine properties such as modulus of elasticity, shrinkage and creep of concrete.

86.5. Inspection during construction

86.5.2. Inspection of the conformity of concrete workability during construction

Inclusion of recycled aggregates in concrete may lead to variations in consistency, even when the same water/cement ratio is maintained in the different batches due the different qualities of recycled aggregates. This effect is more pronounced in mixture with more than 20% of substitutions. In such cases, it is therefore recommended to presoak the recycled aggregate or to adjust the consistency in the work by adding plasticizing or superplasticizing admixtures following the concrete manufacturer's guidelines.

86.5.4. Statistical control of concrete strength during construction

For inspection purposes, the work should be divided in lots, being applicable the maximum limits laid down in this Code for the case of concretes with substitutions no greater than 20%.

The plant classification according to the production variation coefficient shall be carried out using only results from recycled concrete mixtures.

In elements with special responsibility or in the case of concretes with more than 20% of recycled aggregates, it is advisable to increase the inspection, reducing lots laid down in this Code and adopting those shown in the following table:

TABLE A.15.3
Recommended size of concrete batches with more than 20% of recycled aggregates or special elements

Upper limit	Structural element type		
	Compressed elements	Elements subject to simple bending	Massive
Concrete volume	50 m^3	50 m^3	100 m^3
Concreting time	2 weeks	2 weeks	1 week
Constructed surface area	500 m^2	500 m^2	-
Number of floors	1	1	-

In such cases, the inspection should be carried out determining the strength of N > 6 batches per lot.

86.5.6 Indirect control of concrete strength

For recycled concretes with more than 20% of recycled coarse aggregate, it is not advisable to use an indirect strength control.

A 22 Previous and characteristic test of concrete

A22.2 Compressive strength in characteristic test

The characteristic tests shall be carried out to check possible variations in concrete consistency and strength results due to the use of different recycled aggregate batches from the supply plant.

These tests shall also allow an adjustment in the mixing time, make it possible to-check the effect of transporting time on consistency and evaluate the need to correct this in the work by adding plasticizing or superplasticizing admixtures following the manufacturer's guidelines.

For recycled concretes with a content of recycled aggregate no greater than 20%, the control procedures in the article are applicable.

ANNEX 16

Recommendations for the use of lightweight concrete

Introduction

The specifications and requirements laid down in the articles in this Code refer to the use of normal weight aggregates. It is therefore necessary to establish different or additional recommendations when lightweight aggregates are used to produce structural concretes.

A wide range of densities and mechanical properties may be obtained taking into account that the normal weight aggregate may be replaced by light weight aggregate in a partial manner, replacing only the coarse fraction of the aggregate or total, also replacing the sand by fine lightweight aggregate.

To distinguish lightweight concrete from conventional concrete, a subindicator “l” should be added to the stress-strain parameters of the concrete.

2 Scope

For the purposes of this Annex, structural light concrete (SLC) is defined as closed structure concrete with an apparent density measured under dry conditions up to constant weight is less than 2000 kg/m^3 but greater than 1200 kg/m^3 and containing a certain proportion of natural or artificial light aggregate. Cellular concretes are excluded whether cured in a standard manner or in an autoclave.

It is important to highlight that apparent density (or unit weight) in a fresh state is greater than that of normal aggregate concrete and depends on the light aggregate saturation level and the water content of the mixture.

In the case of light structural concrete, minimum strength is established as 15 or 20 N/mm^2 since maximum strength depends on the type of light aggregate used and the specific design of the mixture. Although applications exist for high strength light concrete, the maximum strength of structural light concrete considered in this Annex is limited to 50 N/mm^2.

3 Supplements to the text of this Code

Recommendations for the use of structural light concrete processed using light aggregates are indicated below with reference to the Titles, Chapters, Articles and Sections in this Code.

TITLE 1. BASIS OF DESIGN

The bases laid down in this article of the Guidelines are applicable.

TITLE 2. STRUCTURAL ANALYSIS

The calculation principles and methods established in this article are applicable.

For a non-linear analysis of light concrete structures, a stress-strain diagram shall be adapted based on experimental observations. If no experimental data are available, the diagram in Article 21 may be applied.

In this case, the strain value corresponding to the maximum stress defined in Table A. 16.1 and A.16.2 shall be modified by the following coefficient:

$$\eta_E = \left(\frac{\rho}{2200}\right)^2$$

where p is the apparent dried density of the concrete.

The maximum concrete strain obtained from the equation in Article 21 shall be multiplied by factor *K* depending on the concrete aggregate type and this amounts to:

- 1.1 for concretes with light aggregates and normal aggregate.
- 1.0 for concretes only processed using light aggregates.

In the case of a concrete with light fine aggregate and density of 1,800 kg/m^3, strain corresponding to maximum stress (ε_{cl1}),is defined in Table A.16.1.

TABLE A 16.1

f_{clk} [N/mm^2]	25	30	35	40	45	50
$\varepsilon_{cl,1}$	1.5	1.65	1.8	1.95	2.05	2.2

For a light concrete with normal fine aggregate and density 2,000 kg/m^3, see table TABLE A.16.2

fclk [N/mm]^2	25	30	35	40	45	50
$\varepsilon_{cl,1}$	1.35	1.45	1.6	1.75	1.85	2

The thermal expansion coefficient of concrete with light aggregates depends on the characteristics of the aggregate used in its manufacture with a wide range between $4 \cdot 10^{-6}$ and $14 \cdot 10^{-6}$ °C^{-1}. If no data is present and for structural analysis, an average value of $8 \cdot 10^{-6}$ °C^{-1} may be adopted. In this regard, it is not necessary to consider existing differences between the steel in the reinforcement and the concrete with light aggregate.

TITLE 3. TECHNOLOGICAL CHARACTERISTICS OF MATERIALS

CHAPTER VI MATERIALS

Article 28 Aggregates

28.1 General

There are many different types of light aggregates, both natural and artificial, designed to produce structural light concrete. To determine the light aggregate types used to produce structural concrete, the most reasonable thing is to establish a link with the density ranges laid down in point 1 of this Annex.

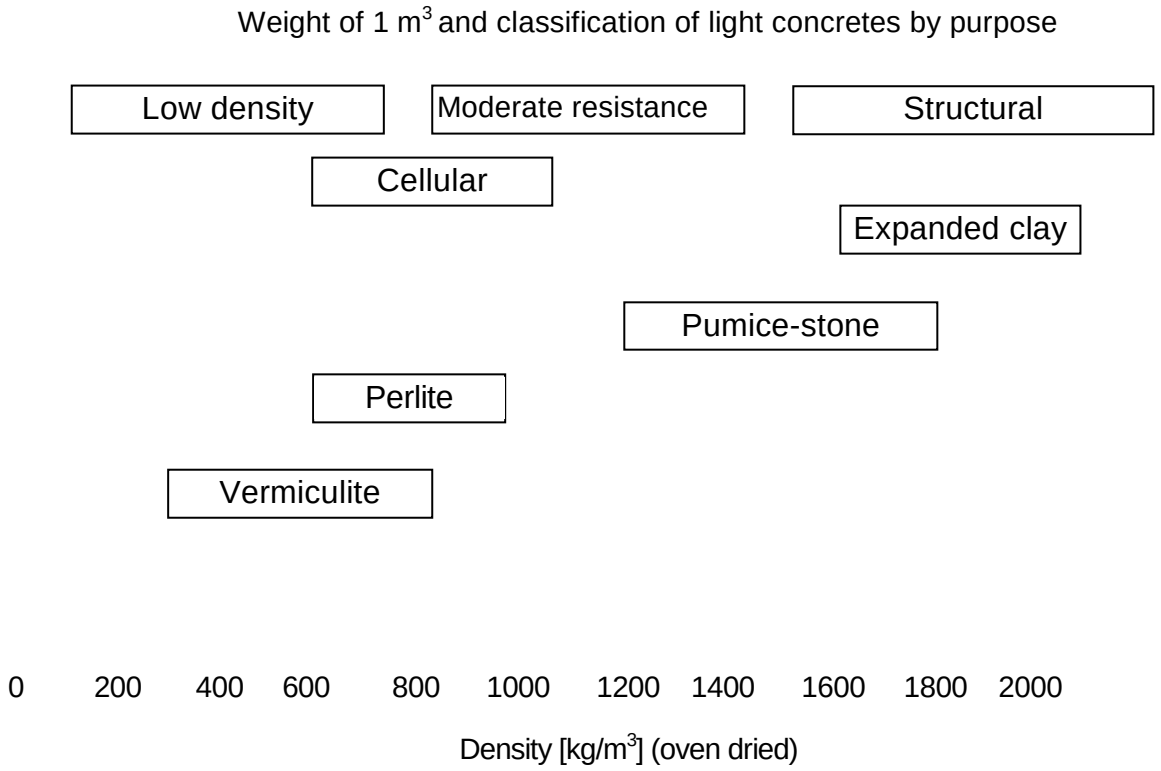

Figure A. 16.1 Density ranges and classification of light weight concretes.

Structural light concretes contain light aggregates that are situated at a high range on the scale and consist of clays, expanded slates or schists, pumice stone or may also take the form of synthetic aggregates, from raw materials such as fly ash.

28.2. Designation of aggregates

When designating aggregates by size, it should be taken into account that granulometric graphs may not be produced by weight for light aggregates. For this reason, it is necessary to change the definition of a maximum size D of an aggregate, and instead of definition of D by weight, it is defined by volume.

28.2. Maximum and minimum aggregate sizes

For the purposes of this Code, the maximum size D of a light aggregate is the minimum sieve size UNE EN 933-2 whereby more than 90% of the volume passes through (% of substandard higher than D 10%) when everything also passes through the double opening screen (% of substandard greater than 2 D equal to 0%). The minimum size of an aggregate is designated as the maximum sieve size UNE EN 933-2 whereby less than 10% by volume passes through (% substandard less than d less than 10%). In *table 28.2*, “% retained by weight” shall be replaced by “% retained by volume” and similarly “% passing through by weight” shall be replaced by "% passing by volume".

28.3. Specifications and tests (this Section has not an equivalent one in this Code).

Density for structural light aggregate is essentially less than 2, which means that the requirement referring to the limitation of particles floating in a fluid of specific weight 2 shall not be applied.

Lightweight aggregates do not display a history of an alkali-aggregate reaction and it will not therefore be necessary to evaluate the product for this type of attack.

28.4. Aggregate particle size grading

With regard to grading analysis, the normal procedure for screening and determining the weight of the retained fraction is insufficient because the difference sized fractions have different densities. If the aggregate is of normal weight and its density does not depend on its size, it is possible to convert weight to volume directly.

The same procedure applied to light aggregates provides incorrect information because the different fractions or sizes possess different densities. This may be taken into account when determining the density of each fraction and if the corresponding volume is calculated. With this proviso, it is possible to consider the same grading limits established for fine aggregates of normal weight.

28.5. Form of coarse aggregate

Because artificial or synthetic aggregates in the approximate shape of a sphere or ellipsoid are used in structural light concrete, the importance of the limits imposed on the shape coefficient and/or slab index shall be reduced.

28.6 Physical-mechanical requirements

Light aggregates are less strong than aggregates of normal weight, both under compression and when subject to the effects of wear by abrasion and crushing. In this situation, the wear resistance of coarse aggregate shall not be evaluated by the Los Angeles methods according to UNE-EN 1097-2, or limitation to the friability of light fine aggregate, evaluated in accordance with a micro-Deval test indicated in UNE 83115 EX.

The absorption capacity of light aggregates is normally high because their lower weight is achieved due to their porous structure. The limitation of water absorption values shall not be applied although ideally they shall be processed in order to present as closed a structure as possible, particularly if absorption is expressed as a % of of the aggregate, because they are less dense.

Since absorption is normally high, to prevent this effect significantly altering the properties of fresh concrete (slump loss, for example), different prior concrete methods or treatments shall be adopted during the concrete production process.

With regard to the frost resistance and structural light concrete, the presence of incorporated air in the concrete helps to reduce deterioration in a similar manner to what occurs with concretes of normal weight. The concrete saturation level (and that of the aggregate) is a crucial factor, as is the appropriate level of strength. Evaluation of the aptitude of aggregates to magnesium sulphate solution treatment cycle in accordance with the method in UNE EN 1367-2 may not be applied, because the low intrinsic strength of light aggregate and its high absorption indicates a remote probability of compliance. In general, the aptitudes of concrete shall be evaluated under freezing and thawing cycles. High strength, inclusion of incorporated air, and a low level of saturation aggregate (and concrete) contribute to significantly improving behaviour.

Article 31 Concretes

31.1 Composition

In structural light concretes, the influence of using light aggregate, mixture proportion, prior saturation level of light aggregate and even the type and variety of light aggregate have a direct influence on the properties of structural light concrete both in a fresh state and in a setting state. For this reason, the composition of concrete and the light aggregate pre-conditioning procedure

shall be examined beforehand, without exceptions, to ensure that it is able to produce concretes whose mechanical, rheological and durability characteristics satisfy design needs.

31.4. Minimum strength value

Design strength f_{ck} *(see 39.1)* shall not be less than *15* N/mm^2 in mass concrete, or 25 N/mm^2 in reinforced or prestressed concrete.

31.5. Concrete workability

The principles established in section 31.5 of this Code may be applied without the need for alteration. The characteristics of test methods UNE-EN 12 350-2 nevertheless mean that slump undervalues the aptitude of light concrete to be compacted.

Slump in a tapered cone is due to the strain of concrete under its own weight. The density of light concrete is less than that of conventional concrete and for this reason it offers greater workability for equivalent slumps.

For the same reason, it is not considered prudent to exceed the upper limits for fluid consistency even with the use of superfluidization additives.

TITLE 4. DURABILITY

CHAPTER VII DURABILITY

Article 37 Durability of the concrete and reinforcements

37.2.3. Concrete quality requirements

For equivalent strength levels, structural light concretes possess a mortar matrix that is usually stronger than that corresponding to a concrete of normal weight. For this reason, it is sufficient to indicate that the durability is assured by compliance with stress classes as indicated in table 37.3.2.b. Obviously, requirements relating to the minimum cement content and maximum water/cement ratio shall naturally also be met.

37.2.4. Coverings

Minimum coatings for structural light concrete shall be 5 mm higher than that indicated in point 37.2.4

37.3. Durability of concrete

Structural light concretes processed using light aggregates do not generally display good behaviour to erosion because the light aggregate is usually soft. With the exception of this situation, its behaviour is similar to that of conventional concrete of normal weight.

37.3.1 Proportioning requirements and concrete performance

The following requirements shall be met to achieve appropriate concrete durability:

a) General requirements

- Minimum cement concrete, according to 37.3.2 (see table 37.3.2.a)
- Strength class according to table 37.3.2.b

The accurate determination of the water/cement ratio is not direct because light aggregates are partially presaturated with water and are capable of additional absorption. For this reason, the limit to the water/cement ratio is replaced with the strength class.

a) Additional requirements

It is not prudent to expose structural light concrete to wear by abrasion in a permanent situation. While in the concrete surface the aggregate particles are covered by mortar, light concretes are able to withstand erosion from eventual actions.

37.3.2. Limitations on water and cement content

Depending on the exposure classes to which concrete is subject, defined in accordance with 8.2.2 and 8.2.3, the specifications set out in table 37.3.2.b for the strength class shall be met.

37.3.7. Erosion-resistance of concrete

It is not advisable to use structural light concrete with light aggregate for exposure class E. This does not make structural light concrete able to withstand possible erosion but the wear mechanism is not controlled by the strength of aggregates as is the case with concrete of normal weight.

TITLE 5. DESIGN

CHAPTER VIII Information concerning materials to be used in structures

Article 39 Characteristics of concrete

39.1 Definitions

The mechanical properties of concrete with light aggregates (ultimate strain, longitudinal strain modulus, tensile strength), for the same compressive strength depend to a large extent on the density, being higher as the dry density of light concrete increases.

39.2 Identification of concretes

With regard to the characteristic strength indicated, the same series as for conventional concrete with strength specified in N/mm^2 is used.

HLE - 25, HLE - 30, HLE - 35, HLE - 40, HLE - 45 and HLE - 50

39.3 Characteristic stress-strain diagram of the concrete

For these concretes, it is advisable to use the parabola rectangle or rectangular diagrams given below, which take into account the steady reduction in failure strain when the dry density of light concrete is reduced:

a) Parabola-rectangle diagram:

The same diagram as in the article may be used, changing the ultimate strain in accordance with:

$$\varepsilon_{cu} = 0{,}0035 \cdot \eta_1$$

Where: $\eta_1 = 0{,}40 + 0{,}60 \dfrac{\rho}{2200}$

b) Rectangular diagram:

The rectangular diagram in the article is applicable, with constant stress

$\sigma_c = \eta(x) f_{cd}$ and height of the compressed block $y = \lambda(x) \cdot h$,, altering ultimate strain as expressed in the above equation and where factor λ for obtaining $\lambda(x)$ is defined by the equation:

$$\lambda = 0{,}936 \cdot \eta_1 - 0{,}737$$

where:

$$\eta_1 = 0{,}40 + 0{,}60 \frac{\rho}{2200}$$

39.6 Modulus of longitudinal deformation of the concrete

The tangent longitudinal modulus of strain of a concrete with light fine aggregate and density of 1,800 kg/m^3 is defined in Table A. 16.1.

TABLE A 16.1

f_{clk} [N/mm^2]	25	30	35	40	45	50
E_{cli} [kN/mm^2]	22.1	23	23.9	24.7	25.4	26.1

In the case of light concrete with normal fine aggregate and density of 2,000 kg/m^3 the values of the tangent longitudinal modulus of strain are given in Table A. 16.2.

TABLE A 16.2

f_{clk} [N/mm^2]	25	30	35	40	45	50
E_{cli} [kN/mm^2]	27.2	28.4	29.5	30.5	31.4	32.3

CHAPTER IX Carrying capacity of struts, ties and nodes

Article 40 Concrete struts

40.3.4 Confined concrete struts

If no more data are available, the characteristic strength and ultimate elongation of the confined concrete struts may be obtained by means of:

$$f_{clk,c} = f_{clk}\left(1{,}0 + k\alpha\omega_w\right)$$

where

K = 0.66 for light concrete with sand.
K = 0.60 for light concrete with light fine aggregate.

CHAPTER X Calculations relating to ultimate limit states

Article 42 Limit State of failure due to normal forces

42.1.3 Deformation domains

The reduction in ultimate strain in concrete subject to bending shall be taken into account when defining strain domains in accordance with the provisions in this annex.

Article 44. Limit State of Failure due to shear

44.2.3.1 Obtaining V_{u1}

The shear failure force due to oblique compression of the core is obtained as in the article, reduced by a factor υ.

$$\upsilon = 0{,}50\eta_1\left(1-\frac{f_{lck}}{250}\right)$$

42.2.3.2 Obtaining V_{u2}

42.2.3.2.1 Members without shear reinforcement

The shear tensile force in the core is obtained as:

$$V_{u2} = \left[\frac{0{,}18}{\gamma_c}\eta_1\xi(100\rho_1 f_{clv})^{1/3} + 0{,}15\alpha_l\sigma'_{cd}\right]b_0\,d$$

with a minimum value of:

$$V_{u2} = \left[0{,}35 f_{lctd} + 0{,}15\alpha_l\sigma'_{cd}\right]b_0\,d$$

where $\eta_1 = 0{,}40 + 0{,}60\dfrac{\rho}{2200}$

44.2.3.2.2 Members with shear reinforcement

The contribution of the concrete to the shear force strength is obtained as:

$$V_{cu} = \left[\frac{0{,}15}{\gamma_C}\eta_1\,\xi\,(100\,\rho_l\,f_{clv})^{1/3} + 0{,}15\alpha_l\,\sigma'_{cd}\right]\beta b_0\,d$$

with a minimum value of:

$$V_{u2} = \left[0{,}35 f_{lctd} + 0{,}15\alpha_l\sigma'_{cd}\right]b_0\,d$$

where $\eta_1 = 0{,}40 + 0{,}60\dfrac{\rho}{2200}$

Article 45 Limit State of Failure due to torsion in linear elements

45.2.2.1 Obtaining T_{u1}

The failure torsion force by oblique compression of the core is obtained as in the article, reduced by a factor υ.

$$\upsilon = 0{,}50\eta_1\left(1-\frac{f_{lck}}{250}\right)$$

Article 46. Limit State of Failure due to punching

46.3 Slabs without punching reinforcement

Maximum tensile strength stress in the critical perimeter is obtained as:

$$\tau_{rd} = \frac{0{,}18}{\gamma_c} \eta_1 \xi \left(100\, \rho_\ell\, f_{cv}\right)^{1/3} + 0{,}1 \cdot \sigma'_{cd}$$

with a minimum value of:

$$\tau_{rd} = 0{,}40\, f_{lctd} + 0{,}1 \cdot \sigma'_{cd}$$

TITLE 6. EXECUTION

Article 69 Construction, reinforcing and assembly processes for reinforcements

69.3 General criteria for structural ironwork processes

69.3.4 Bending

With the aim of avoiding excessive compression and sscratching of SLC in the bar curvature area, folding of the bar to obtain hooks and bends shall be carried out using mandrels of diameter no less than those indicated in Table 66.3 multiplied by [1.5]

The remaining content of this section is applicable to SLC

69.4 Reinforcement of structural ironwork

69.4.1. Distance between bars of passive reinforcements

69.4.1.1 Isolated bars

The maximum diameter of the bar to be used with SLC shall be Φ = 32 mm. The remaining content of this section is applicable to SLC

69.4.1.2. Groups of bars

In SLC, the groups of bars are made up of two bars at most.

69.5 Specific criteria for anchorage and splicing of reinforcements

69.5.1 Anchorage of passive reinforcements

The basic length of SLC corrugated bar anchorage is as indicated in the text multiplied by a factor [$1/\eta_1$],

where

$$\eta_1 = 0{,}40 + 0{,}60 \frac{\rho}{2200}$$

and where ρ is the SLC dry density value ≤ 2000 (kg/m^3)

Article 71 Elaboration and placing of concrete

71.3 Elaboration of concrete

71.3.2. Composition of component materials

In the case of SLC, conducting previous tests with the aim of checking that SLC meets the conditions laid down is the established procedure of accepting the required composition and approving the concrete construction procedure.

The high water absorption levels generally typical of light aggregates in the dry state makes it difficult to predetermine the true water/cement ratio corresponding to the required dose. If the status is saturated, which is not immediately achieved, a process of water transfer to the concrete paste that also alters the required water/cement ratio may arise from the cortex accessible to capillarity effects. In the first case, the workability of SLC will be reduced and in the second case its strength will be reduced.

The complexity of the problem gives rise to different procedures for constructing concrete that evade a standard regulation. The correct result of the planned composition is highly sensitive to small adjustments in the construction procedure. The previous tests are therefore established as a dose and construction procedure validation method, as a unique and indivisible process.

The remaining content of this section is applicable to SLC

71.3.2.3 Aggregates

When working SLC, the aggregates may be composed by weight, volume or in a mixed manner so that the light aggregate is dosed by volume and the rest by weight.

The remaining content of this section is applicable to SLC

71.3.3 Mixing of concrete

Mixing SLC takes longer, in general, than conventional concrete. This increase in mixing time is required for the moistening of the aggregates before adding the cement and blending the mixture after adding additives following the addition of total mixture water. This time is required to prevent rapid absorption of water and additives by the light aggregate removes workability from the concrete mixture and efficacy from the action of its admixtures.

The low density of light aggregate may cause it to float at the beginning of the mixture, depending on the level of water saturation it possesses when it enters the mixing machine, which may determine effective use of the mixing machine.

The remaining content of this section is applicable to SLC

71.4 Transport and supply of concrete

71.4.1 Transport of concrete

If the SLC is transported by pumping the influence of the pump pressure must be considered on the increase in water absorption by light aggregates and also the corresponding decrease when it ceases. In the first case, a loss of workability will arise and in the second case an excess water/cement ratio. In the first example, this will make the concrete difficult to place and, fundamentally, its pumping operation and in the second case, a loss of strength will arise in the affected concrete and also a loss of compactness in internal structures. A change must therefore be made in the dose as a consequence.

The corresponding previous test on SLC after pumping constitutes the concrete validation procedure.

Transport in a concrete mixing truck makes it possible to correct the tendency for a drop in workability that arises in all cases during transport and also the tendency for light aggregates to segregate during the transport of more workable concretes by means of mixing before pouring.

The remaining content of this section is applicable to SLC

71.5 Placing of concrete

71.5.2 Compaction of concrete

Compacting of SLC requires higher vibration energy than that required for normal concrete. As a consequence, compacting is carried out by reducing separation between consecutive vibrator conditions to 70% of that used for normal structural concrete.

The tendency for light aggregate to float grows with excessive vibration.

The surface coating of the face on which the concrete is placed shall be produced by appropriate implements used to press the light aggregate and add it to the mixture so that it is covered by the grouting.

ANNEX 17

Recommendations for the use of self-compacting concrete

1 Scope

For the purposes of this Annex, self-compacting concrete is a concrete that is compacted by the action of its own weight as a consequence of a studied composition and the use of specific superplasticization admixtures, without the need for vibration energy or any other compacting method. It does not display segregation, coarse aggregate blocking, bleeding or grout exudation.

Self-compacting concrete adds to the properties that conventional concrete in any of strength classes, the properties of self-compactability described above.

The specifications laid down in the articles of this Code are guaranteed by experience on conventional concretes, whose workability is measured through the slump in the Abrams cone in accordance with UNE-EN 12350-2. This Annex lays down recommendations for appropriate use of such concrete that, due to its compactability, possesses properties in the fresh state that give it a workability that may not be evaluated by slump in the Abrams cone.

It is the responsibility of the Design Author or, if appropriate, the Project Management to specify the most appropriate type of self-compacting concrete in each case.

2 Supplements to the text of this Code

Recommendations for use of self-compacting concrete are indicated below with reference to the Titles, Chapters, Articles and Sections of this Code.

TITLE 1. BASIS OF DESIGN

The bases laid down in this article of the Code are applicable.

TITLE 2. STRUCTURAL ANALYSIS

CHAPTER 5 Structural analysis

The principles and methods of calculation established in this article are applicable.

For any long-term analysis and also loss or difference deflections calculations, the values and evolution of the modulus of elasticity, flow rate and shrinkage may differ from conventional compacting concretes.

If experimental tests are not available to provide rheological parameters of this concrete, they may be available by consulting specialised texts.

TITLE 3. TECHNICAL CHARACTERISTICS OF MATERIALS

CHAPTER 6 Materials

The component materials used in self-compacting concretes are the same as used in conventional compacting concretes in accordance with the requirements laid down in the current UNE 83001, and Title 3 of this Code, also including other specified below, that shall meet the standard quality requirements applied. It is particularly important that self-compacting concrete should be manufactured with the greatest possible regularity. This means

that the initial selection and inspection of materials are very important as is the previous validation of any dosage.

Self-compacting concrete should preferably be manufactured using appropriate cements for this purpose depending on the type and quantity of admixtures they contain or otherwise with common cement type CEM I, concrete admixtures meeting the regulation (Article 30 of this Code) and using, where required, an appropriate inert filler as an aggregate to correct the granule size of finer diameter sands that pass through a 0.063 mm screen.

One way or the other, a sufficient quantity of fines (particles passing through a 0.125 mm screen) shall be achieved to obtain the property of self-compactability. The total quantity of fines less than 0.125 mm supplied by the cement, the concrete admixtures and the aggregates required to manufacture self-compacting concrete is in the order of 23% by weight of the concrete mass. This may be determined, when necessary, with greater accuracy by means of the corresponding characteristic tests.

As in conventional compacting concrete, other components such as water recycled from concrete plants, pigments, shrinkage reducing admixtures based on glycol or fibres may be used in self-compacting concrete when necessary, applying the same limitations and specifications as for conventional concrete.

Article 26 Cements

Cements conforming to the current specific regulations shall be used. When cements are used for specific special applications in self-compacting concrete that include in their composition a quantity of additional admixtures destined exclusively to provide the self-compacting concrete the necessary amount of fine particles (particles that pass through a 0.125 mm screen), the minimum quantities of the above mentioned cements to be used shall be such that after deducing the amount of complementary admixtures they contain, they meet the requirements laid down in Article 37.3.2 of this Code. The quantity of complementary admixtures shall not be considered in the calculation of the water/cement ratio or the maximum cement quantity. Both the maximum water/cement ratio value and the maximum cement quantity shall comply with the specifications laid down in the Articles of this Code.

Article 28 Aggregates

The maximum size of aggregates for the self-compacting concrete defined in accordance with Article 28.3 of this Code shall be limited to 25 mm. It is advisable to use maximum sizes between 12 mm and 20 mm, depending on the reinforcement layout.

Fillers are aggregates whose large proportion passes through a 0.063 screen and are obtained by treating the source materials from which they proceed.

Appropriate fillers are those that come from the same materials as the aggregates that conform to the specifications laid down in Article 28 of this Code.

In accordance with Standard UNE EN 12620, the granule size of a filler shall be defined in the following table (Table A17. 1)

Table A17.1. Filler granule size

Sieve size (mm)	Percentage passing through by weight
2	100
0'125	85 to 100
0'063	70 to 100

The initial designation tests, the factory production control and certification of the above mentioned control for the filler in question are established in Standard UNE EN 12620.

It is advisable in exclusive case of self-compacting concrete, that the quantity obtained by adding the fine aggregate particle content passing through a UNE 0.063 screen and the lime addition, if appropriate, of the cement should not be greater than 250 kg/m^3 of self-compacting concrete,.

For the filler storage, methods similar to those used for cement shall be used. Waterproof recipients or silos shall be used to protect the filler against humidity and contamination.

The water requirement of inert fines that pass through a UNE 0.063 screen shall be compensated by the use of appropriate superplasticization admixtures that guarantee fulfilment of the water/cement ratios specified in Article 37.3.2 of this Code, thus guaranteeing durability.

Article 29 Admixtures

The use of a superplasticization admixture is a fundamental requirement in self-compacting concrete and it may sometime be advisable to use a viscosity modulating admixture that minimizes the effect of changes in humidity content, fine content or granule size distribution to ensure that the self-compacting concrete is less sensitive to small changes in the quality of raw materials and proportions, regarding the self-compactability property.

It should be used after finding out its compatibility with cement and additions, checking effective maintenance of rheological properties over time specified by installation of the self-compacting concrete and the corresponding mechanical properties by carrying out previous tests.

The superplasticization admixtures shall meet the Standard UNE EN 934-2.

The viscosity modulating admixtures shall help achieve appropriate mixtures, minimizing the effects of changes in humidity content, fine content or granule size distribution.

The viscosity modulating admixtures should conform to the general requirements laid down in Table 1 of UNE EN 934-2.

Article 30 Additions

The use of additions not covered by Article 30 of this Code is not considered.

Article 31 Concretes

As its definition suggests, self-compacting concrete displays three basic intrinsic properties:

- Fluidity or ability to flow without external aid and fill the formwork
- Resistance to blocking or ability to pass between the bars of the reinforcement
- Dynamic and static ability and resistance to segregation that allows it to achieve a final uniform distribution of the aggregate throughout the mass.

31.1. Composition

The components of self-compacting concrete are the same as those of conventional structural concrete although their proportions may differ, as self-compacting concrete is characterized by a lower coarse aggregate content, higher mineral fines content and a lower maximum aggregate size in general.

31.3 Mechanical characteristics

Compressive strength value is an essential reference for self-compacting concrete.

Development of compressive resistance through time may be considered equivalent to that of conventional compacting concrete. As already mentioned, however, the possibility of a delay in the gain of initial strength due to the higher dose of admixtures used shall be taken into account.

The same considerations as applied to compressive strength may be applied to tensile strength. The relationship between both strengths proposed by article 39.1 of this Code may be applied, as it can be for flexural strength.

31.5 Concrete workability

The workability of self-compacting concrete may not be characterised by the methods described in article 31.5 of this Code for conventional concrete. This self-compactability is characterised through specific test methods that make it possible to evaluate the material performance in terms:

- of fluidity by means of flow test according to UNE 83361 or flow test in a V funnel according to UNE 83364.
- block resistance by means of a flow test with a J ring in accordance with UNE 83362 and by means of L box test according to UNE 83363.
- and resistance to segregation.

Although no standard tests are available to evaluate the resistance to segregation, this characteristic may be checked from the behaviour of the material in the flow tests and V funnel. In the flow test, a uniform distribution of coarse aggregates should be observed and not type of segregation or exudation in the perimeter of the final test cake.

Table A17.2 displays the acceptable ranges that self-compacting parameters should conform to, in any case, according to the different test methods. These requirements shall be met simultaneously for all specified tests. The design Author or, if appropriate, the Project Management may define a more specific self-compactability level by means of the categories defined in section 39.2 of this Annex depending on the work characteristics.

Table A17.2 General requirements for self-compactability

Test	**Parameter measured**	**Permissible range**
Flow	$\mathbf{T_{50}}$	$T_{50} \leq 8$ sec
	$\mathbf{d_f}$	550 mm $\leq d_f \leq$ 850 mm
V funnel	$\mathbf{T_V}$	4 sec $\leq T_V \leq$.2O sec
L box	$\mathbf{C_{bL}}$	$0.75 \leq C_{bL} \leq 1{,}00$
Flow with J ring	$\mathbf{d_{Jf}}$	$\geq d_{f}$-50 mm

Self-compacting concretes shall maintain their self-compactability characteristics over a time period, referred to as “open time” that is sufficient for their correct installation based on design operating and environmental needs. The characterisation test mentioned above may be used to determine the open time, comparing the result of various repetitions of the same tests carried out consecutively in the same sample.

TITLE 4. DURABILITY

CHAPTER 7I Durability

Article 37 Durability of concrete and reinforcements

37.3 Durability of concrete

As a consequence of the absence of vibrations and the habitual use of additions and fillers in self-compacting concrete, the paste-aggregate interface is usually denser than in conventional concrete. As a consequence, together with the greater general compactability of the granular structure, it is usually observed a reduction in the speed of entrance of most corrosive agents.

The absence of vibration shall lead in turn to an external coating layer of concrete of higher density that is therefore less permeable.

However, the maximum a/c ratio and minimum cement content required laid down in point 37.3.2 of this Code for the relevant exposure class shall be respected in any case.

The behaviour of self-compacting concrete under freezing and thawing cycles may be considered equivalent to that of conventional compacting concrete, the same precautions and specifications laid down in point 37.3.2 in this Code for conventional concrete shall be considered.

Due to the denser microstructure of self-compacting concrete, the risk of explosive spalling may be higher for this material. For self-compacting concrete, however, when the additional of silicate fume is not significant, the fire resistance may be assumed to be the same as set out in Annex 7 of this Code for conventional concrete of the same strength class or high strength concretes where the above mentioned addition is significant.

TITLE 5. DESIGN

CHAPTER 8 Materials data for the design

Article 39. Characteristics of concrete

While the properties of self-compacting concrete in the fresh state differ to a large extent from those of conventional compacting concrete, its behaviour in terms of strength, durability and other performance parameters in a set state may be considered similar to those of conventional concrete of the same w/c ratio and produced using the same component materials. The properties of self-compacting concrete in a set state referred to in the following section shall be evaluated using the same test procedures used for conventional compacting concrete.

Regarding its behaviour at an early age, some changes may arise in properties such as shrinkage and/or setting times as a consequence of the higher doses of fines and admixtures are generally used.

In applications where the modulus of elasticity, shrinkage due to drying and flow rate may be critical factors and the paste or coarse aggregate content varies essentially from that normally used, these properties shall be analysed by means of specific tests.

In general, the differences from conventional concrete are sufficiently small to ensure that self-compacting concrete may be used in the formulation given in the articles of this Code. Particularly, the same active and passive reinforcement anchorage length may be used, the same criteria to specify minimum concrete strength and the same construction joint processes.

39.1 Definitions

Self-compacting concrete may be subject to the equations proposed in 39.1 of this Code, which connect compressive strength with tensile strength and with flexural strength.

39.2 Identification of concretes

The designation of self-compacting concrete is similar to that of conventional compacting concretes according to Article 39.2 of this Code. All that needs to be done is to use the code AC (e.g. HA-35/AC/20/IIIa) in accordance to the equation given below as indicator C of consistency.

T-R/AC/TM/A

Alternatively, self-compactability may be defined by a combination of the classes corresponding to flow (AC-E), viscosity (AC-V) and block resistance (AC-RB) in accordance of the following equation.

T-R/(AC-E+AC-V+AC-RB)/TM/A

where T, M, TM and A refer to the same as defined in section 39.2 of this Code and y AC-E, AC-V and AC-RB represent the corresponding classes in accordance with tables A17.3, A17.4 and A17.5.

Table A17.3 Flow classes

Class	Criterion, according to UNE 83361
AC-E1	550 mm $\leq d_f \leq$ 650 mm
AC-E2	650 mm<$d_f \leq$750 mm
AC-E3	750 mm < $d_f \leq$ 850 mm (*)

Table A17.4 Viscosity classes

Class	Criterion for flow test, according to UNE 83.361	Alternative criterion for V funnel test according to UNE 83364
AC-V1	2'5 sec < $T_{50} \leq$ 8 sec	10 sec $\leq T_v \leq$ 20 sec
AC-V2	2 sec < T_{50} < 8 sec	6 sec $\leq T_v \leq$ 10 sec
AC-V3	$T_{50} \leq$ 2 sec (*)	4 sec $\leq T_v \leq$ 6 sec (*)

Table A17.5 Blocking resistance classes

Class	Characteristic requirement	Criterion by J ring test, according to UNE 83362 (*)	Criterion for L box test, according to UNE 83363
AC-RB1	Required when the maximum aggregate size is greater than 20 mm or the thickness of the holes through which the concrete passes is between 80 and 100 mm	$d_{Jf} \geq d_f$-50 mm, with a ring of 12 bars	≥ 0.80, with 2 bars
AC-RB2	Required when the maximum aggregate size is less or equal to 20 mm or the thickness of the holes through which the concrete passes is between 60 and 80 mm	$d_{Jf} \geq$ df.50 mm, with a ring of 20 bars	≥ 0.80, with 3 bars

(*) where: d_f represents the flow in the test according to UNE 83361 and
D_{Jf}, represents the flow in the J ring test according to UNE 83362

If the concrete must pass through areas with thicknesses less than 60 mm, the behaviour shall be assessed experimentally by designing components that make it possible to evaluate specific block resistance in this specific case.

In general, self-compactability class AC-E1 shall be considered as the most appropriate for most structural elements that are normally constructed. Particularly, its use is recommended in the following cases:

- structures that are not strongly reinforced,
- structures where the filling of the formwork is simple, the concrete may pass through wide holes and the pouring holes do not require it to be horizontally displaced in long distances inside the formwork.
- structural elements where the non-formwork surface is slightly separated from the horizontal.

The self-compactability class AC-E3 is recommended in the following cases:

- Structures that are strongly reinforced,
- Structures where the filling of the formwork is very difficult, the concrete may pass through very small holes and the concrete pouring holes require very long horizontal displacement inside the formwork.
- Horizontal structural component where it is very important to achieve concrete self-levelling.
- Very high, very slender and very strongly reinforced structural elements.

39.6. Modulus of longitudinal deformation of the concrete

As self-compacting concrete contain a higher volume of paste than conventional compacting concrete and given that the paste modulus of elasticity is lower than that of aggregates. A slightly lower strain modulus may be obtained (between 7% and 15%) in the case of self-compacting concrete.

In the absence of experimental data, the strain modulus may be calculated using the equation in the articles of this Code for conventional compacting concrete. When detailed knowledge of the longitudinal strain modulus is required, as for example in certain structures with an advance construction process where strain monitoring is critical, experimental determination of the above mentioned value may be used like in conventional concrete.

39.7. Shrinkage of concrete

In general, the equation in Article 39.7 of this Code is applicable. However, due to the composition of self-compacting concrete, higher shrinkage may occur, which shall be considered as indicated below.

As self-compacting concrete has a higher quantity of fines in its composition and a high resistance to segregation, the material exudes practically no water during installation. Although this aspect is theoretically positive, in practice the effect may be negative because exudation water very often compensates for water that evaporates in the fresh state and consequently prevents cracking due to plastic shrinkage.

In this way, due to the low water/binding agent ratio generally considered, the curing of self-compacting concrete is particularly important, more in structures with high surface/volume ratios.

In self-compacting concrete, a combination of factors is more likely to arise than in conventional compacting concrete, leading to significant endogenous shrinkage; a higher cement content and the use of finer cement (leading to higher heat of hydration), a higher quantity of fine material in general and low water/fines ratio.

The use of fly ashes and/or lime filler may contribute to the reduction of endogenous shrinkage.

If the endogenous shrinkage of material is a significant parameter for the function of the structure, it shall be evaluated for the mixture in question throughout a time period of at least 3 months through laboratory tests on samples sealed immediately after taking out of the mould.

As occurs in conventional compacting concrete, a high cement content will lead to a higher heat of hydration, consequent expansion and subsequent thermal heat shrinkage, which may be critical as far as cracking is concerned in medium or large mass components. The same precautions shall be taken as for conventional compacting concrete.

If the shrinkage due to drying of the material is a significant parameter for the function of the structure, it shall be evaluated for the mixture in question over a time period of at least 6 months through laboratory tests on samples exposed to a controlled atmosphere.

39.8. Creep in concrete

The formula given in Article 39.8 of this Code may be used in general. The flow behaviour of self-compacting concrete may be considered equivalent to that of conventional compacting concrete of the same a/c ratio. Although slightly higher strain may arise for the same strength level, if air drying is allowed, this difference may disappear due to the higher refinement of the self-compacting pour structure.

In applications where flow rate may be a critical factor, this property shall be taken into account during the dosage process and checked by means of specific laboratory tests on samples exposed to a controlled atmosphere.

CHAPTER 10 Calculations relating to Ultimate Limit States

Article 44. Limit State of Failure due to shear

Although no differences worth to be considered have been detected in the calculation process, due to the lower coarse aggregate content and the lower maximum size in general, self-compacting concretes display a smoother crack structure than that of conventional contracting concretes of the same strength. This slightly reduces the resistant component of the assembly. In any case, the corresponding calculation may be carried out using the formula in the articles set out in this Code for conventional compacting concrete.

TITLE 7. CONSTRUCTION

Article 68. Processes prior to placing of reinforcements

68.2. Falsework and underpinning

When using self-compacting concrete, it shall be taken into account that the static pressure law exercised by the concrete may be hydrostatic when calculating falsework, formwork and moulds.

68.3. Formwork and moulds

Although the self-compacting concrete does not increase the loss of grout through the formwork joints, it is desirable to ensure that the formwork is properly watertight, as when using conventional compacting concrete.

Article 69 Construction, reinforcing and assembly processes for reinforcements

69.5. Specific criteria for anchorage and splicing of reinforcements

In average terms, the adherence between the reinforcement bars and the concrete is higher for self-compacting concrete than for comparable conventional concrete. Therefore the standard adherence stress still can be considered.

Article 70. Positioning and tensioning processes for the active reinforcements

70.2. Processes prior to the tensioning of active reinforcements

70.2.3. Bonding of active reinforcements to concrete

The prestressing reinforcement anchorage length may be calculated using the formula given in point 70.2.3 of this Code. Nevertheless constructing prestressed components using self-compacting concretes of a strength class lower than that used for construction with conventional concrete, is not allowed.

Article 71 Manufacture and placing of concrete

71.2 Installations for the manufacture of the concrete

In the self-compacting concrete manufacturing process, special care should be taken over the following aspects:

Self-compacting concrete should be prepared in a plant that belongs or not to the construction site.

The humidity of aggregates shall be accurately calculated during storage and before mixing of concrete components to prevent unexpected variations that affect the workability of the concrete.

The admixtures may be incorporated in the plant or construction site. Due to the special characteristics of this concrete, it is nevertheless advisable to combine both situations under the control of the concrete manufacturer.

Transport shall be carried out by means of a mobile mixer or cement truck.

71.3 Manufacture of concrete

71.3.1 Supply and storage of component materials

71.3.1.1 Aggregates

If using a filler, the characteristics shall be determined in accordance with UNE EN 121620.

71.3.2 Dosage of component materials

When dosing a self-compacting concrete, the corresponding needs relating to the design shall be considered, as follows:

structural needs spacing between reinforcement bars, element sizes, architectural complexity of the formwork, visible faces, design peculiarities that may affect concrete flows such as thickness changes, bulges, etc.

operational needs:: filling procedure (pump, tank, channel, etc.), filling speed and duration, characteristics of the formwork, visibility of concrete during filling, distance where flow must arrive, drop height, accessibility of the cement truck, positioning of pumping equipment, etc.

environmental: climate and temperature of the atmosphere at the time of filling, temperature of the material, transport duration, any critical traffic situations, etc.

performance: environmental exposure class, characteristic strength and other design requirements.

As general characteristics, in a self-compacting concrete the total fine content (particle size < 0.125 mm), i.e. cement, additions and fillers, shall be in the range from 450 to 600 kg/m^3 (180 to 240 litres/m^3). The cement content is in a range of 250 to 500 kg/m^3. Paste volume (water, cement, active mineral additions, fillers and admixtures) are normally above 350 litres/m^3.

Water and cement content limitations are specified in accordance with the exposure conditions defined in the articles of this Code, in accordance with Article 37.3.2.

Taking into account that the paste is mostly responsible for giving the aggregate fluidity and movement, it is logical to think about continuous granulometry and over and above the spacing conditions between bars, a maximum aggregate size no greater than 25 mm. The coarse aggregate volume is lower in self-compacting concrete than in conventional compacting concrete, generally not exceeding 50% of total aggregates.

If more than one admixture is used, it is important to note the compatibility between them.

Once self-compacting requirements have been achieved (see point 31.5 of this Annex), it is essential for dosing to be tested in a situation of industrial supply to the construction site.

71.5. Placing of concrete

71.5.1. Pouring and positioning of concrete.

When the self-compacting concrete is laid by means of pumping, the corresponding pressure increase shall be taken into account.

When using self-compacting concrete, a maximum pouring distance of 10 m from the point where the concrete is poured is recommended.

The improved coatings of visible surfaces and lower air occlusion is achieved when the concrete is laid as close as possible to the base of the formwork. That is the reason why it is recommendable to initiate concrete pouring by placing the hose as close as possible when pumping.

71.5.2. Compaction of concrete

Due to the condition of self-compactability, it is not generally necessary to subject the concrete to a compacting process.

71.5.3. Placing of concrete in special climatic conditions

71.5.3.2. Concreting in hot weather

Measures shall be adopted to reduce the risk of drying out during the various stages of manufacture, transport, installation and curing during the first few hours.

71.6 Curing of concrete

It is advisable to carry out effective curing that prevents surface drying and the effects of plastic shrinkage as self-compacting concrete may be more vulnerable than conventional compacting concrete.

TITLE 8 CONTROL

CHAPTER 14 General bases for the control

Article 86. Control of the concrete

The principles and methods established in this article are applicable.

The self-compacting concrete acceptance conditions with regard to the properties of self-compactability that characterise this specific concrete shall be established on the basis of the result of the test referred to in point 86.3.2 of this Annex and that specifications given under point 31.5 of the Annex.

86.3.1. Tests on the workability of the concrete

The workability of self-compacting concrete is not measured by means of consistency as for a conventional compacting concrete, but by means of the property of self-compactability whose specifications are laid down in point 31.5 of this Annex.

When using self-compacting concrete, the self-compactability properties must be checked in each and every one of the cement trucks or supply units by means of a single flow test in accordance with UNE 83361, for each cement truck or supply unit in the case of mass or reinforced concrete, with reinforcements that do not obstruct the passage of concrete or by means of a single flow test and another with a J ring, in accordance with UNE 83363, in the case of a densely reinforced or prestressed concrete.

Remaining tests for characterisation of self-compactability laid down in point 31.5 of this Annex by means of the V funnel and L box methods according to UNE 83364 and 83363, respectively, shall only be carried out in the concrete production plant as previous tests to adjust dosage and characteristic tests.

86.3.2. Tests on the strength of the concrete

These tests shall be carried out in the same way as in conventional compacting concrete but with a modification to UNE 83301 whereby the tests shall be manufactured by simple pouring, once only, without any type of compacting. Only surface finishing with a trowel shall be permitted.

86.4. Inspection prior to supply

In any case it is advisable to carry out prior tests systematically to optimise the dosing to be used in self-compacting concretes, paying particular attention to the characteristics of self-compactability.

A 22 Prior and characteristic tests of the concrete

A.22.2 Characteristic tests of the strength

The calculation principles and methods established in the Annex 22 of this Code are applicable.

ANNEX 18

Concretes for non-structural use

1. Scope

This Code lay down specific regulations for Structural Mass Concrete (HM), Structural Reinforced Concrete (HA) and Structural Prestressed Concrete (HP). This Annex also defines the scope and specifications to which concretes for non structural use are subject.

For the purposes of this Annex, concrete for non structural use are defined as concretes that do not add structural responsibility to the construction but contribute to improve the durable conditions of the structural concrete or add the necessary volume of a resistant material to provide the geometry required for a certain purpose. This type of concrete may be classified into two classes:

- Blinding Concrete (HL): The purpose of this concrete is to prevent structural concrete drying during pouring and also possible contamination during the first hours of concreting.
- Non Structural Concrete (HNE): Concrete with the purpose of configuring resistant material volumes. Examples include concretes for sidewalks, concretes for borders and concretes for filling.

The following sections of this Annex provide relevant specifications and recommendations for the effective application of these guidelines to concretes for non structural use.

2. Materials

2.1 Usable cements

The cements usable for these concrete types are shown in the following table:

Table A 18.1 Usable cements

USE	RECOMMENDED CEMENTS
Non-structural precast concrete	Common cements except CEM II/A-Q, CEM II/B-Q, CEM II/A-W, CEM II/B-W, CEM II/A-T, CEM II/B-T, CEM III/C
Blinding and filling of trenches concretes	Common cements
Other concretes produced in the site	Cement for special uses ESP VI1 and Common cements except CEM II/A-Q, CEM II/B-Q, CEM II/A-W, CEM II/B-W, CEM II/A-T, CEM II/B-T, CEM III/C.

2.2 Aggregates

For the manufacture of concrete for non-structural use, rolled sands and gravels or sands and gravels from crushed rocks or appropriate steel industry slag may be used.

Up to 100% of recycled coarse aggregate may be used for the manufacture of non-structural cement, provided it complies with the specific classifications laid down in Annex 15 of this Code.

If the affected performance of granulated slag from combustion in power stations has been demonstrated in accordance with article 28 of this Code, they may be used as aggregates provided they comply with the specifications laid down in the article for steelwork aggregates.

2.3 Admixtures

Concretes for non-structural use are characterised by their low cement content and it is therefore advisable to use water-reducing admixtures with the aim of reducing the porous structure of the concrete in its set state as far as possible.

3. Characteristics of concretes for non-structural use

3.1 Blinding Concrete (HL)

The only concrete usable for this application is designated as follows:

HL-150/C/TM

As indicated in the identification, the minimum cement dose shall be 150 kg/m^3.

It is advisable for the maximum aggregate size to be 30 mm with the aim of facilitating the workability of these concretes.

3.2 Non Structural Concrete (HNE)

The minimum characteristic strength of these types of non-structural concretes shall be 15 N/mm^2. Due to the low strength required of these concretes and consequent low cement contents, it does not appear necessary to among the requirements that the designation should contain any type of reference to the environment in accordance with Article 39.2. The designation of Non-Structural Concretes (NSCs) is therefore as follows:

HNE-15/C/TM

It is advisable for the maximum aggregate size to be less than 40 mm with the aim of facilitating the placing of these concretes.

For these concretes, it is necessary to follow the curing instructions indicated in section 71.6 of these Guidelines, particularly as applied to floors, sidewalks and concreted components with large exposed surfaces.

For these concretes, the component shall be inspected in accordance with Article 85 of this Code and a consistency inspection shall be carried out at least once daily or with the frequency laid down in the Special Technical Specifications or by the Work Management. Independently of this regulation Inspection, the Special Technical Specifications may lay down strength control n criteria for such concretes.

ANNEX 19

Guarantee levels and requirements for the official recognition of quality marks

1. Introduction

This Code consider the possibility that the Project Management may apply special considerations for some products and processes if they show additional guarantee levels to the minimum ones required in accordance with Article 81.

In general, these additional guarantee levels are demonstrated through the possession of a quality mark that is officially recognised by a competent Administration within the field of construction and which belongs to a Member State of the European Union, or to the Agreement on the European Economic Area or having an agreement for establishing a Custom Union, in which case the level of equivalence shall be proved applying the procedures in the Directive 89/106/CEE .

2. Guarantee levels for products and processes

In case of products that, according the Directive 89/106/EEC, need to have the CE marking, the guarantee level required by regulation is that associated with the referred CE marking, specified in the corresponding harmonized European standards and which allows free trade within the European Economic Area. In the case of products or processes for which the CE marking is not in force, the guarantee level required by regulation is that laid down in the Article in this Code.

The Manufacturer of any product, the Person responsible for any process or the Constructor may, voluntarily, opt for a quality mark that ensures a guarantee level that exceeds the minimum requirement laid down by this Code. In the case of products with a CE marking, said quality marks must bring added value with regard to characteristics not covered by CE marking.

Given that, since these are voluntary initiatives, the quality marks may show different criteria for concession in the corresponding specific procedures; this Annex lays down the conditions that allow differentiation when there is an additional guarantee level to the minimum required by regulation and which, therefore, may be officially recognised by the competent public authorities.

3. Technical basis for the official recognition of quality marks

The Administration that carries out the official recognition of the quality mark must verify that the requirements included in this Annex are complied with and ensure that they are maintained for official recognition. In order to achieve this, the Administration, while maintaining the necessary confidentiality, may intervene in all those activities that it considers relevant for the recognition of the quality mark.

The official regulation where the Administration gives the recognition shall explicitely indicate that it is done for the purpose that lays down in this Code and in agreement with the technical basis included in this Annex.

The Administration that carries out the official recognition of a quality mark of a product or process, in order to guarantee the requirements that lead to recognition, may require that designated representatives to participate in the committees defined in the certification body or taking decisions on certification matters.

The competent Administration shall have access to all the documents regarding the quality mark, with the necessary guaranty of confidentiality.

4. General requirements for quality marks

For its official recognition a quality mark shall:

- Be of a voluntary nature and awarded by a certification body that complies with the requirements of this Annex.
- Be in agreement with this Code and to include in its regulations explicit declaration of this agreement.
- Shall be awarded based on a procedure described in a governing Regulation for the quality mark that defines its specific guarantees, the awarding procedure, the operating system, the technical requirements and the rules for making decisions related to it. This regulation must be available to the public, defined in clear and specific terms and it must provide unambiguous information both for the client of the certifier and the other interested parties. Likewise, the regulation must take account of specific procedures both in the case of external installations to the construction site and installations that belong to the site, as well as processes developed in the site
- Guarantee independence and impartiality in the concession, not allowing, among other measures, taking part in the decisions regarding any expedient to persons developing consultancy activities related with.
- It shall include, in the Regulations governing the granting of the quality mark, the appropriate treatment for certificated products for which there are non-compliant production test results in order to guarantee that, in this case, the appropriate corrective action is carried out immediately and, if applicable, clients are informed. The Regulations procedure shall also lay down the maximum period that may elapse between the non-conformance being detected and the corrective action being carried out.
- It shall lay down the minimum requirements that the laboratories working on the certification must verify.
- To establish for the awarding that it shall be a continuous production control during a period of at least six months in the case of products or processes developed in installations different from the work site. In the event of installations on the site, the governing regulation shall consider criteria to ensure the same level of information of the production and the guarantee for the user.
- In case of products or processes included in the scope of this Code, but which is different to those covered in this Annex, additional guarantees shall be presented over those required by regulation, but which may contribute to the compliance of the basic requirements laid down by this Code.

5. Specific requirements of the quality marks

This Code defines, besides the general requirements demanded in the section 4 of this Annex, specific requirements that the quality marks must fulfil in order to be officially recognized by an Administration.

5.1. Concrete

The quality mark for concrete shall:

- Guarantee the control of the acceptance of component materials used in the manufacture of concrete and the stocks system shall allow the trazability of every batch, with a continuous and documented control of the reception and consumption of such component materials.
- Guarantee the concrete is mixed in fixed installations, for which the Regulations could include a transitory situation until January 1st, 2010. Apart of that, shall be guaranteed the real use of such installations with sealing systems or similar in order to detect by-pass systems for using mobile mixers. As alternative could be used other systems of fabrication with mobile mixers provided the certification body could guarantee an adequate control of the homogeneity and quality of the process taking into account, among others, the six-monthly checking of all the tests specified in the table 71.2.4.
- Check that the concrete production installations have a management system for data regarding the production in order to supervise in real time the amount of concrete produced. With this system the daily real versus foreseen data of dosage regarding, at least, cement, aggregates, admixtures and water will be registered. Apart of that, it will be checked that exist electronic systems to guarantee the correct dosage of, at least, cement, admixture and water. Dosing shall be automatic not allowing non-authorized variations in dosing and it will operate when detecting non-admissible deviations. The certification system shall audit the dosing data.
- Guarantee that when the concrete needs to be transported outside the installation, such as for example prepared concrete, the product reach the consumer maintaining the homogeneity and the specifications defined, through, among other procedures, using transport units implemented with systems for continuous register of the resistance of the shovels as well as the volume of the water tanks. As alternative, could be adopted the sealing of the water tanks to check that water has not been added to concrete before the supply, in this case, it will be checked that a declaration signed by the client on the correct condition of the sealing is included in the documentation. The transportation elements shall be implemented with systems to allow their geographic allocation from the production central and to track the path from the central to the final supply site.
- Consider concrete designated by characteristics with a different resistance or ambient as different products, belonging to independent productions.
- Guarantee that the installation has a procedure to maintain the guarantee during the periods when, for whatever reason, interruptions occur in the normal production of a certificated product. Likewise, the quality mark shall define the way to check that the procedure is carried out if any interruption occurs. It shall demand to generate the corresponding alert when any of these situations occur. It shall supervise that concretes with interruptions in their production longer than 3 months were not maintained as certified products, cancelling the certificate validity in such case.
- Guarantee the production control followed by the concrete installation shall consist of at least a daily determination of the resistance of the concrete for each kind of specific resistance manufactured.
- Implement a external control of the strength that shall be carried out at least twice a month for each type of product for which more than 200 m³ has been produced. In other cases at least one determination shall be carried out for the types produced.
- Guarantee the interruptions of certified products sampling are never longer than 1 month, in which case it will be considered that the product has had a discontinuity in the

production and it must be penalized accordingly to the Regulation of the quality mark, as well as being applied a sampling frequency that corresponds to a new production.

- Define a system of penalties that ensures the least impact to the production of non-conformance concrete. For this purpose, the Producer shall inform in writing to the certification body the detail of the first corrective actions adopted in a period no longer than a week since any non conformity detection, not elapsing more that two months since detecting a non conformity regarding the product requirements until, if not solved, the awarding of the quality mark be invalidated.
- The consumer risk, understood as the probability of accepting a defective batch, for the specific resistance of concrete must be less than 45%.
- Guarantee that in the conditions defined in the previous paragraph, the values of strength obtained in the control of production have a limited scattering, such that in every case the standard deviation and the variation coefficient being simultaneously smaller than the values in the table below:

Strength specified for concrete, f_{ck} (N/mm^2)	Standard deviation of the population σ (N/mm^2)	Coefficient of variation of the population δ
20	3,0	0,115
25	3,6	0,110
30	4,2	0,110
35	4,9	0,110
40	5,5	0,108
45	6,0	0,105
50	6,5	0,103
60	7,3	0,098
70	8,1	0,094
80	8,7	0,089
90	9,2	0,085
100	9,6	0,080

- Guarantee the concrete compositions specified by the producer to the client in the certificated declaration of the concrete composition supplied as referred in the section 86.6.
- Guarantee the traceability of concrete with the component materials, that would be declared to the client with proper labelling systems for this goal.

5.2. Passive reinforcements

The quality mark for passive reinforcements shall:

- Guarantee that the acceptation of steel used for elaboration of passive reinforcement and the stock system allow a perfect traceability by mean of a continuous and documented control of the consumption of steel.
- Demand an computerized system for the control of the traceability of the reinforcements regarding the steel used in the elaboration.
- In the case of standardised passive reinforcements, when the CE marking enters into force, the quality mark must bring added value with regard to characteristics not covered by such marking. In any case, the quality mark must ensure that the added values are consistent with the special considerations covered by the Code for this case.
- In the case of assembled reinforcement or structural ironwork, guarantee that it is checked, at least once each turn, the height of the corrugation by diameter and machine of the straightened material and the length, by machine or cutting tool, in the control of production defined by the Producer.
- Guarantee that the validation of the processes:
    - Straightening: for each machine and this for a diameter for each one of the series (small, medium or large), a monthly sample shall be taken before and after the process.
    - Cutting: for each machine or operator (if the cut is by hand), a measurement each turn.
    - Bending: for each machine, a reinforcement each turn.
    - Welding: for every welding work position, a quarterly check.
- Require that, when discontinuities superior to 1 month in the manufacture of the certified product are produced, the manufacturer will communicate this discontinuity to the certificatory body, otherwise it will be sanctioned according to the Regulations of the quality mark. The requirements to the production and the intensity of the controls after the discontinuity will have to be established in the Regulations, according to the causes.
- Require the manufacturers of structural ironwork having systems of labelling through computerized codes that guarantee the traceability of the reinforcements and that allow the subsequent management of the traceability in the work.
- Define and apply, in its case, a regime of sanctions that guarantees the minimum impact of the production of not conformed reinforcement in the user. To this purpose, will not elapse more than 3 months since a non conformity related to the requirements of the product is detected until, if it had not been settled, the use of the mark is suspended for this certified product.

5.3. Precast elements

The quality mark for precast elements shall:

- Guarantee the requirements laid down in this Annex in the installations for producing the component elements (concrete, passive reinforcement, active reinforcement, etc.) without prejudice to the provisions specifically laid down in this section.
- Guarantee that the Prefabricator have a fixed concreting installation and a workshop for passive reinforcement capable of producing the whole of materials necessary for the manufacture of precast elements. Only in exceptional cases shall the use of external

plants or workshops be permitted, in which case, they must also possess a quality mark.

- Check that precast concrete installations have a data management system of the concrete plant in order to supervise in real time the production of concrete. This supervision shall be carried out by external technical personnel to the concrete production department. By means of this system, the daily production of concrete shall be registered with data on the real dosage against the anticipated dosage, of at least cement, aggregates, admixtures and water. In addition, the concrete plant shall have appropriate electronic systems to ensure, as a minimum, the dosage of cement and admixtures. The dosage shall be fully automatic thereby preventing unauthorised variations in the dosage and it shall respond when unauthorised deviations are detected.
- Check that the transport of concrete for pouring into moulds must be carried out in such a way that the concrete has the ideal characteristics for its use; to ensure this the samples shall be taken during the unloading of the vehicle or in the system for distribution of the concrete.
- Check the production control shall consider concretes with different designations as belonging to independent productions.
- Guarantee that the production control followed by the installation shall consist of at least one daily determination of the strength of the concrete for each kind of concrete manufactured that day. To minimise the risk of the consumer accepting a defective batch, this determination shall consist of a sufficient number of samples to carry out a predictive analysis of the resistance required at 28 days.
- Check that a procedure is established to maintain the guarantee during the periods when, for whatever reason, interruptions occur in the normal production of any type of concrete.
- Guarantee that under no circumstances shall interruptions of more than 1 month be permitted during the sampling of concretes.
- Check the external control of the resistance shall be carried out with a frequency of at least or more than 2 times a month for each designation of concrete manufactured with a monthly production volume exceeding 200 m³. For production volumes of less than 200 m³ a month, at least one external test shall be carried out.
- Check that the Prefabricator has an internal self-control laboratory to at least carry out tests on concrete strength and verification tests shall be carried out in external accredited laboratories. A responsible technician shall be head in the laboratory of the Prefabricator.
- Guarantee whether or not resistant soldering is used for the elaboration of the reinforcements, the welders must be approved in accordance with the system used.
- Check appropriate systems to ensure the traceability shall be available, both for the materials used and for the precast elements themselves.
- Check that the manufacturers to have labelling systems by means of codes that allow the computerized management of the precast products and guarantee the identification and the traceability of the element from its fabrication to the position in site. This system of management of the finalized products will allow the preparation of computer listings that contain the prefabricated units supplied to a construction site and their main characteristics.
- Check that in the case of precast units for one-way floors slabs, the Prefabricator has a specification sheet and its corresponding Memory of Calculation of the systems of floor slab systems in which each of its elements can be used and guarantee that its technical contents is correct. For that, the certification body will seal the corresponding

sheets, indicating the dates on which they have been checked and the technician responsible for this verification. This specification sheet, which could be given to the Authors of the project, shall include, at least the following information:

a) Name and addresses of the producer and the technician author of the Memory
b) All the geometric and mechanical characteristics of the constituting systems and elements considered by the producer as useful for making easier to check their complying with this Code, complementing the characteristics of each element provided, if it is the case, for the CE mark.
c) All the geometric and mechanical characteristics of the elements not subjected to the CE mark necessary to check them according this Code.
d) In particular, at least the following characteristics shall be defined:

- geometric characteristics and weight per meter in the case of the resistant elements of the floor, or per square meter in the case of floor slabs, and of its constitutive elements if they are not included in the CE mark. Sections details at scale among 1:2 and 1:50 of each of the elements that compose the system will be included. When the resistant prefabricated unit incorporates transverse reinforcements, these will be represented to scale separately on it.
- the designation of the used materials, so much of the prefabricated units without EC marking as those of the upper in situ concrete slab , if any. For each material it will be given the design strength, elastic limit or maximum unit load, if necessary, according to this Code,
- for elements without EC marking, the diameter and position of the reinforcement in the transversal section of the resistant prefabricated units. In the case of the prestressed elements, the initial presstres tension of the active reinforcement and the estimated total loss.
- the mechanical characteristics of the resistant elements considered as isolated indicating the maximum resistant moments on secondary supports and the centre of span. In the case of prestressed elements, it will be indicated, as well, the bottom resistant module, the stresses due to prestressing in the upper and lower fibre and the value of the prestressing force multiplied by the eccentricity of the equivalent tendon relative to the centre of mass of the element section.
- the mechanical characteristics of the different types of floor slabs defined in the specification sheet, to negative and positive bending, indicating the ultimate bending and cracking moments, the gross and fissured stiffness, the limit moments in service according to the different classes of exposure and the ultimate shear. The values of rigidity and moment of cracking will be calculated at twenty-eight days of age, the multiplier coefficients to obtain these values being indicated to other ages.

5.4. Steel for passive reinforcements

The quality mark for passive reinforcement shall:

- When the CE marking enters into force, guarantee an added value with regard to characteristics not covered by said marking.
- Differentiate the productions based on the forms of supply (bar or roll).

- The quality mark must ensure added value focused on the transformation processes in ironwork and the assembly of reinforcements being consistent with the special considerations covered by this Code for these cases.
- Request the manufacturers to have labelling systems by means of computerised codes ensuring the traceability of steel up to the casting level and which allow the subsequent management of said traceability by the customer.

5.5. Steel for active reinforcements

The quality mark for passive reinforcement shall:

- Guarantee for the products supplied to the customer bonding conditions so that the anchoring lengths and the transfer of the prestressing covered in this Code may be applied.
- Guarantee that the relaxation at 80% shall not exceed the non-permissible conformity values referred to in the article 38.9 of this Code.
- Define, with a sufficient statistical guarantee, experimental checks on samples, and, if applicable, on elements, including the risk of variability and defining the bonding characteristics for each type of element.

5.6. Prestressing application systems

The quality mark for this execution process shall:

- Develop a quality system that covers all the activities included in the installation procedure, including injection.
- Check the fulfilment of the quality system referred in the previous paragraph.
- Guarantee the entire traceability of the post-tensioning process, carried out by specially trained personnel in accordance with the audited procedures of the quality mark.
- Check that the presstressing Company has a health and safety system with additional guaranties to the usual required by the current legislation and which may be audited by a certification system.

6. emporary quality mark for concrete

Up to the 31 of December 2010 and with temporary character, the competent Public Administrations will be able to recognize officially quality marks of concrete, even in the case that they do not reach the level of guarantee established in the section 5.1 of this Annex, provided the fulfilment of the rest of applicable requirements of this Annex is guaranteed. This type of quality mark with official recognition will have to be referred as temporary in all the documentation that regulates it.

In order to prevent confusions in the market, those facilities that opt for a temporary quality marks, shall not be able to fabricate products with marks of level of guarantee according to the section 5.

The transitory quality mark of concrete shall:

- Guarantee that the control of reception of the component materials used for the manufacture of the concrete and the system of stocks allow the perfect traceability of every batch.
- Guarantee the supplied concrete is homogeneous.
- Guaranteeing that, when there is transport of the concrete out of the installation, as for example in the case of the ready-mixed concrete, the product supplied to the customer preserves its homogeneity and maintains the defined specifications.

- Consider concretes designated by different resistance as independent productions (products, from now on).
- Guarantee that the installation has a procedure to maintain the guarantee during the periods when, for whatever reason, interruptions occur in the normal production of a certificated product. Likewise, the quality mark shall define the way to check that the procedure is carried out if any interruption occurs, for that reason shall request updated information when these circumstances occur.
- Guarantee that the production control followed by the installation of concrete implies at least a determination for every 200 m³ of elaborated product and that a weekly verification is complied at least.
- Define an external control that will be carried out with a frequency never inferior to 2 determinations per month for the total of the products fabricated, procuring an equitative sampling of the total set of the products protected by the quality mark.
- Guarantee that, in no case, are interruptions produced in the samplings corresponding to the products certified, by causes external to the certificatory organism, which are superior to 3 months, in whose case it will be considered that the product had a discontinuity in the production and will have to be sanctioned according to the regulation of the mark, applying it, as well, a sampling rate equivalent to the one of a new production.
- Define and apply, if applicable, a sanction regime that guarantees the minimum impact of the production of not conformal concrete on the user. To this purpose, will not pass more than 4 months since it is detected a non conformity that decreases the confidence in the fulfilment of the requirements of the product until, if it had not been settled, the use of the mark shall be suspended for this registered product, if necessary.
- Guarantee that the products present a scatter measured by the coefficient of variation being less than 13%.
- Guaranteeing, through the statistical criteria established in the corresponding regulations of the mark, that the risk of the consumer, understood as the probability of accepting a faulty batch, for the resistance specified of the concrete will have to be inferior to 50%..

7. Requirements for the Certification Body

The certification bodies applying for new awarding after the date of approval of this Code, must be accredited according to the Royal Decree 2200/1995 in 28th December, in conformity with UNE-EN 45011 in case of certification of products or in conformity with UNE-EN ISO/IEC 17021 in case of certification of processes or systems.

The certification bodies that are recognized or have requested the official recognition before the date of approval of this Code, will have up to the 31th of December 2010 to be accredited in accordance with what has been indicated in the previous paragraph.

The certification body will put availably of the competent Administration that carries out the recognition all the necessary information for the correct development of the activities in relation to the recognition of the badge.

Likewise, the certificatory body shall:

- Notify the competent Administration that carries out the official recognition any change that took place in the initial conditions in which the recognition was granted.
- Being endowed with an organ (committee), specific for every product or process, that analyze the application of the regulating rules and adopt or, depending the case, suggest the adoption of decisions related to the concession of the mark. In this committee will have to be, justly represented, the manufacturers, the users and the collaborative agents with the certification (laboratories, auditors, etc.).

- Check that the laboratory used to carry out the control of production has the sufficient material and human resources.
- Check the conformity of the results of tests for the control of production with a periodicity adequate for the manufacture of the product and, in no case, less than one per semester. For that, the regulations of the mark will establish criteria of acceptance, statistical as well as precise. For the analysis of these results of tests, the regulations will establish also the criteria for correction, according to the results obtained through the verification laboratory in the tests of contrast. The statistical conformity of the results of self-control corrected, as well as of the not corrected ones will have to be checked
- Check that, when a non conformity of the production control is produced, the manufacturers have taken corrective measures in a term not superior to a week, have informed in writing to the customers, providing them with the results of the self-control. They will have to have solved the non conformity in a maximum term of three months. According to the adoption of corrective measures, it will be able to be granted an additional term of three months, to the ending of which it will be proceeded to the withdrawal of the mark in the case of the non conformity being maintained. If necessary, to the effect of speeding up the adoption of measures, the allegations of the manufacturer and the proposal of withdrawal of the mark, the process will be able to be carried out by computer procedures (Internet etc).
- Carry out, through verification laboratories, periodic tests of contrast of the properties of the products protected by the mark. The sampling to carry out these tests must be done guaranteeing the representativeness and proper distribution to the verification laboratories and also to the laboratories of the manufacturers, in its case. The certification body, according to the obtained results, will carry out, if applicable, corrections of the data obtained in the production control.
- Organize inter-laboratory tests with periodicity annual, at least, to allow tracking the evolution of the laboratories.
- Establish a system of market monitoring, so that all the products protected by the mark are the target of periodic analysis, taking samples for testing and checking that the documentation allows, in any case, guarantee the traceability as well as the coincidence of the supplied product with the characteristics that appear in the sheet of supply.
- In the case of the concrete, as the certification must include the transport up to the supply site of the customer, any sampling for self-control, for tests of contrast or for tracking the market, will always be carried out on specimens taken in the final destination.

8. General requirements for verification laboratories

They shall be laboratories of the certification body or subcontracted by it, accredited according to the Real Decree 2200/1995 of 28 of December fulfilling the standard UNE-EN-ISO/IEC 17025 or belonging to some Public Administration with competences in the area of the construction of the referred in section 78.2.2.1.

The certificatory body shall watch that the verification laboratories designated for every dossier, are independent of the laboratories that carry out the production control.

9. Requirements for the manufacturer production system

The production installation shall:

- Have implemented a quality system audited by an authorized certificatory body according to the Real Decree 2200/1995 of 28 of December conforms to UNE-EN-ISO/IEC 17021. This system will be according to the standard UNE-EN ISO 9001, in the parts that are of application.

- Have a laboratory for the continuous control of the production and the product to supply, being own or contracted.
- Have defined and implemented a continuous production control in factory, whose data for a period of, at least, six months before the concession have to be available. This period could be of two months in some special cases in which the same product is fabricated regularly, as for example in the facilities of work site. For these cases, the regulations of the mark shall include specific criteria that assure the same level of guarantee to the user as in the general case, so that the mark can be granted in a maximum term of two months from the presentation of the self-control data.
- Have subscribed a certificate of insurance that protects its civil liability for possible faulty products fabricated, in a sufficient amount, according to has been established by the regulations of the quality, mark.
- Have an information system on the results of the production control, which is accessible for the user, through computer procedures (internet, etc...) or alternatively, a system for evaluation by the certification body of the self-control with weekly periodicity, preferably automatized by computer procedures, In the last case, the manufacturer will make available the results of the production control to the users that require it,.

ANNEX 20

Checklist for control of the design

The design control should be carried out on the design documents. As a guide, the checklist for each document shall be as follows.

1. Calculation report

1.1. Geometric study

1.2. Geotechnical report

Check that the report specifies:

a) Relevant recommendations for definition of the foundations;
b) strength, strain and ground stability properties;
c) groundwater level;
d) geotechnical characteristics of the ground that can produce or mobilize thrust;
e) aggressivity properties of soil; and
f) aggressivity characteristics of groundwater in contact with the foundations.

1.3. Actions

1.3.1. Identification and consistency,

a) Types of actions
   a.1) direct and indirect;
   a.2) fixed and variable;
   a.3) permanent, variable and accidental.

b) These agree with
   b.1) standards on actions corresponding to the type of structure in question;
   b.2) geotechnical report;
   b.3) specific documents on actions to be considered, accepted by the Owner.

1.3.2. Actions during the construction process

Check whether actions have been evaluated during the construction process by examining

a) incidence in force calculations; and
b) effect on sizing.

1.4. Structural proposal

Check whether the structural layout adopted guarantees

a) overall structure stability;
b) stability of each one of its parts; and
c) stability during the stages of the construction process

1.5. Structural models

Check whether

a) they are correct and consistent with sizing criteria with regard to final structure; and
b) they are correct and consistent with sizing with regard to construction process stages.

1.6. Calculation of forces

1.6.1. Combinations of actions

Check whether
a) the action combinations considered are relevant; and
b) the action combinations not considered are irrelevant.

1.6.2. Weighting coefficients;

Check whether

a) partial safety coefficients of actions are adapted to those laid down by specific current regulations or otherwise to those indicated in this Code; and
b) combination coefficients are adapted to those laid down in the specific regulations or otherwise those indicated in this Code.
c) they comply with conditions for reduction of partial material coefficients, where applicable

1.6.3. Calculations methods or computer programs used

Check whether the calculations programs or methods used

a) are correctly specified in accordance with the provisions of the standards; and
b) are approved as acceptable.

1.6.4. Data entry in programs for the calculation of forces

Check whether these agree with:

a) the structural proposal adopted;
b) the model adopted;
c) the geometry of the structure;
d) the suggested combination of significant actions

1.6.5. Outputs of results of calculation programs

Check whether the results are consistent with the models used and the actions adopted, having carried out an independent evaluation of forces on a significant sample of selected components in accordance with structural importance and representativeness criteria. The following aspects shall be officially noted in accordance with the level of control (table 82.2):

a) sample selected;
b) selection criteria
c) check processes;
d) assumptions adopted; and
e) results obtained

1.6.6. Consideration of the construction process

Check whether forces have been evaluated during the construction process, particularly during falsework installation, to establish limits and factors conditioning the structure. Depending on the control level (table 82.2) officially note whether:

a) the loads transmitted during falsework installations are evaluated;
b) the transmitted load evaluations are correct;
c) the conclusions are correct;
d) additional studies are required.

1.7. Checking of limit states

1.7.1. Consistency between the results of the calculation and checking forces

Check the suitability of the forces adopted in limit state checks. Depending on the control level (table 82.2) take the sample corresponding to the structural components shown in this table.

1.7.2. Characteristics of materials and reduction factors

Check whether the characteristics of materials and their partial safety factors are correctly specified for:

a) concrete;
b) steel for reinforcements

1.7.3. Dimensioning and checking

Examine whether the dimensioning of sections and elements and also checks on ultimate and serviceability limit states are in accordance with the standards. Depending on the control level (table 82.2), take the sample corresponding to the structural components shown in this table.

1.7.4. Durability

Check whether specifications relating to durability are met with regard to:

a) exposure class;
b) concrete specification and justification of cement type; and
c) covers

1.7.5. Fire resistance

Check whether specifications relating to fire resistance are met with regard to:

a) fire resistance times;
b) mechanical covers;
c) thicknesses; and
d) additional studies required.

1.7.6. Seismic resistance

Check whether specifications relating to seismic behaviour are met with regard to:

a) suitability of structural hypothesis;
b) seismic area;

c) construction class;
d) workability:
e) ties; and
f) other aspects.

1.7.7. Consistency of dimensioning with the models

Check whether the dimensioning results are consistent with the models used by carrying out an independent evaluation of dimensioning by means of safety checks, strain checks and other relevant limit states, on a significant sample of components chosen in accordance with criteria of structural importance and representativeness. Depending on the inspection level (table 82.2), take a corresponding sample, identifying:

a) sample selected;
b) selection criteria;
c) check processes;
d) assumptions adopted; and
e) results obtained

1.7.8. Impact on the construction process

Check whether the effects of dimensioning on the construction process have been evaluated, particularly during falsework installation, to establish their limitations and conditioning effects on the structure. Depending on the inspection level (table 82.2), take the corresponding sample and note officially whether:

a) the loads transmitted during falsework installations have been evaluated;
b) the transmitted load evaluations are correct;
c) the conclusions are correct;
d) additional studies are required.

1.7.9. Case of specific elements

If particular components are present, such as special supports, corbels or wall beams take a sample check to evaluate whether the dimensioning is correct. Depending on the inspection level (table 82.2), take the corresponding sample and note officially whether:

a) samples selected;
b) selection criteria;
c) check processes;
d) assumptions adopted; and
e) results obtained

1.7.10. Consistency with geotechnical report

Check whether the foundation component dimensioning respects the conclusions in the geotechnical report with regard to:

a) foundation type;
b) cement type;
c) covers;
d) permissible pressure; and
e) differential movements.

2. Drawings

2.1. Consistency with calculation report

Check whether the force and dimensioning calculation results have been respected by checking a significant sample of elements selected in accordance with criteria of structural importance and representativeness. Depending on the inspection level (table 82.2), take a corresponding sample and note officially whether:

a) samples selected;
b) selection criteria;
c) check processes;
d) assumptions adopted; and
e) results obtained

2.2. Consistency with other definition drawings of the work

Check whether the layout, squares and dimensions of the various structural components, openings affecting the structural behaviour of components and other conditioning factors that may affect the structure defined in non-structural drawings have been taken into consideration in these structural drawings and to define the structural model.

Depending on the control level (table 82.2), take a corresponding sample and note officially whether:

a) samples selected;
b) selection criteria;
c) check processes;
d) assumptions adopted; and
e) results obtained

2.3. Graphic documentation

Depending on the control level (table 82.2), take a corresponding sample, identifying.

a) foundations;
b) walls and buttresses;
c) pillars;
d) beams;
e) slabs and flooring; and
f) special components.

It shall be included:

a) samples selected;
b) selection criteria;
c) check processes;
d) assumptions adopted; and
e) results obtained

Check by sampling in accordance with the inspection level (table 82.2):

a) whether the layout heights, the squares and dimensions of the various structural components agree with the forecast figures in the structural model adopted;
b) whether construction openings have been allowed for in the installations and whether these agree with the assumptions made when calculating forces and dimensions;
c) whether provisions for reinforcements in cross-sections and reinforcements diagrams have been defined by means of detailed quartering views that allow the steelwork to be processed and facilitate the positioning of reinforcements in the

parts to make them viable;

d) whether the reinforcement overlaps and anchorages and their bending radiuses have been defined or whether clear criteria have been laid down for their definition;
e) whether reinforcement transitions have been defined at joints and their construction viability evaluated;
f) whether details of the support of prefabricated or composite parts have been defined as a function of the supposed joint actions in the structural model and their required stability conditions;
g) whether geometrical conditions have been defined together with other details to be met by the surroundings of parts of a lightening nature, depending on their influence in the definition of the resistance section of composite parts;
h) whether the covers have been respected in accordance with the environmental exposure and fire resistance conditions;
i) whether all these structural elements have been defined without any gaps in their definition or severe lack of information on components; and
j) whether the material characteristics partial safety coefficients adopted and associated inspection levels have been defined.
k) whether the geotechnical characteristics for the design have been described.
l) whether the proposed construction process has been defined, where necessary.

3. Technical specifications

3.1. Consistency with calculation report

It shall be checked

a) whether the material and construction specifications have been met and also its associated reception control levels specified in the calculation report;
b) whether aspects have been specified such as wall backfill conditions that affect ground thrust, respecting the assumptions laid down in the calculation reports; and
c) whether the essential aspects of the construction process affecting the structural models have been specified together with actions adopted in the force calculation and in the ultimate and serviceability limit checks.

3.2. Consistency with structural plans

A check shall be carried out to ensure that the material and construction specifications have been met and also its associated reception control levels specified in the calculation report.

3.3. Tolerances

A check shall be carried out to ensure that the dimensional tolerances have been specified or specifically referred to in order to adopt those given in the standards.

ANNEX 21

SUPPLY AND CONTROL DOCUMENTATION

1. Documentation prior to supply

The supplier must provide the relevant documentation as laid down in Section 79.3.1 of this Code and as detailed below.

1.1 Documentation of quality mark

Where applicable, a statement signed by a physical person suitably qualified to do so, which must contain at least the following information:

- Identification of the certifying body
- Logo of the quality mark
- Identification of the manufacturer
- Scope of the certificate
- Guarantee that remains covered by the mark (level of certification)
- Certificate number
- Date of issue of certificate

The existence of an officially recognised quality mark, pursuant to the provisions laid down in this Code, may reduce the documentation required in this Annex.

1.2 Other documentation

1.2.1 Cements

The documentation to be submitted shall comply with the relevant regulation in force.

1.2.2 Water

In the case of water not previously used or arising from the cleaning of the tanks in the concreting plants, a test certificate shall be issued guaranteeing that all of the specifications laid down in Article 27 of this Code have been met.

The document shall also contain:

- Name of laboratory
- A declaration from the laboratory that it is accredited, pursuant to Standard UNE EN ISO/IEC 17025, to carry out the test in question, in the case of laboratory that is not a public laboratory, as covered in Section 78.2.1.1, .
- Date of issue of certificate

1.2.3 Aggregates

Where applicable, the documentation required by the CE marking shall be provided. The figure shows a model example of a label for the market.

01234

Empresa, Apartado de correos 21, B-1050

02

0123-CPD-0456

EN 12620
Áridos para hormigón

Forma de las partículas	Valor declarado	(*IL*)
Tamaño de las partículas	Denominación	(*d/D*)
Densidad de partículas	Valor declarado	(Mg/m^3)
Limpieza		
Calidad de los finos	Cumple / no cumple el valor umbral y categoría	(%) (*AM*, *EA*)
Contenido en conchas	Categoría	(p.e., CC_{10})
Resistencia a la fragmentación y machaqueo	Categoría	(LA_{15})
Resistencia al pulimento	Categoría	(CPA_{54})
Resistencia a la abrasión	Categoría	(CAA_{10}, A_N30)
Resistencia al desgaste	Categoría	($M_{DE}20$)
Composición / contenido:		
Cloruros	Valor declarado	(% C)
Sulfatos solubles en ácido	Categoría	(p. e., $AS_{0,2}$)
Azufre total	Cumple / no cumple el valor umbral	(% *S*)
Componentes que alteran la velocidad de fraguado y endurecimiento del hormigón	Cumple / no cumple el valor umbral	(Tiempo de fraguado en minutos y resistencia ala compresión *S* %)
Contenido en carbonatos	Valor declarado	(% CO_2)
Estabilidad en volumen		
Retracción por secado	Cumple / no cumple el valor umbral	(% *WS*)
Componentes que alteran la estabilidad en volumen de las escorias de a.h. enfriadas por aire	Valor declarado	(aspecto)
Contenido en carbonatos	Valor declarado	(% CO_2)
Absorción de agua	Valor declarado	(% *WA*)
Emisión de radioactividad	Valor declarado a petición	
Liberación de metales pesados	Valor umbral válido en el lugar de uso	
Liberación de carbonos poliaromáticos	Valor umbral válido en el lugar de uso	
Liberación de otras sustancias peligrosas	Por ejemplo, sustancia X: 0,2 µm^3	
Durabilidad frente al hielo y deshielo	Valor declarado	(*H* o *SM*)
Durabilidad frente a la reactividad álcali-sílice	Valor declarado a petición	

In the case of self-consuming aggregates, a test certificate shall be issued guaranteeing that all of the specifications mentioned in the CE marking have been met. The documentation shall also contain:

- Identification of the laboratory carrying out the abovementioned tests.
- In the case of a laboratory that is not a public laboratory covered in Section 78.2.1.1, a statement from the laboratory that it is accredited, pursuant to Standard UNE EN ISO/IEC 17025, to carry out the abovementioned test.
- Date of issue of the certificate
- Guaranty that the statistical analysis meets that required in the CE marking.
- For aggregates that do not comply with the grading set defined in Section 28.4.1 a study of the fines justifying their use on a trial basis must be provided.

1.2.4 Admixtures

The document required by the CE marking shall be forwarded. The figure shows a model example of a label for the market.

CE

0123-CPD-0001

AnyCo Ltd, PO Box 21, B-1050

00

0123-CPD-0456

EN 934-2

Aditivo para hormigón
Reductor de agua de alta actividad
superplastificante
EN 934-2:T3.1/3.2

Contenido máximo en cloruros ……. , en masa
Contenido máximo en alcalinos ……., en masa
Comportamiento a la corrosión[1]: NEN 3532

Sustancias peligrosas X: menor que …..
ppm

[1] Solamente se requiere cuando se coloca en el marcado de un miembro nacional con reglamentaciones sobre esta materia.

1.2.5 Additions

Where applicable, the documentation required by the CE marking shall be forwarded. The figure shows a model example of a label for the market.

01234
Compañía, dirección **05** 01234-CPD-00234
EN 450-1 **Ceniza volante para hormigón** **Categoría de finura: N** **Valor declarado de la finura en caso de categoría N: 25%** **Pérdidas por calcinación, categoría: A** **Densidad de partículas: 2 300 kg/m^3** **Sustancias peligrosas: NL, F$^{3)}$**

In the case of silica fume, a test certificate shall be issued guaranteeing that all of the specifications mentioned in Section 30.2 of this Code have been met. The document shall also contain:

- Name of laboratory
- In the case of a laboratory that is not a public laboratory, as covered in Section 78.2.2.1, a statement from the laboratory that it is certificated, pursuant to Standard UNE EN ISO/IEC 17025, to carry out the abovementioned test.
- Date of issue of certificate
- Guarantee that the statistical analysis corresponds

1.2.6 Concrete

The test certificates guaranteeing compliance with the relevant provisions laid down in this Code must be forwarded. As a minimum, they shall include:

- Certificate of dosing mentioned in Annex 22 to this Code
- Where applicable, a certificate of the tests that implement those covered in Annex 22: resistance to compression and depth of water penetration
- Name of laboratory
- In the case of a laboratory that is not a public laboratory, as covered in Section 78.2.2.1, a declaration from the laboratory that it is accredited, pursuant to Standard UNE EN 17025, to carry out the abovementioned test.
- Date of issue of certificate
- Type of specimen used in the compression test

The following documents relating to the materials used in preparing concrete shall be forwarded:

Documentation corresponding to the CE marking or, where applicable, certificates of tests guaranteeing compliance with the specifications laid down in this Code.

Where applicable, statements of having an officially recognised quality mark.

1.2.7 Steel for passive reinforcements

Where applicable, the documentation required by the CE marking shall be forwarded. The figure shows a model example of a label for the market.

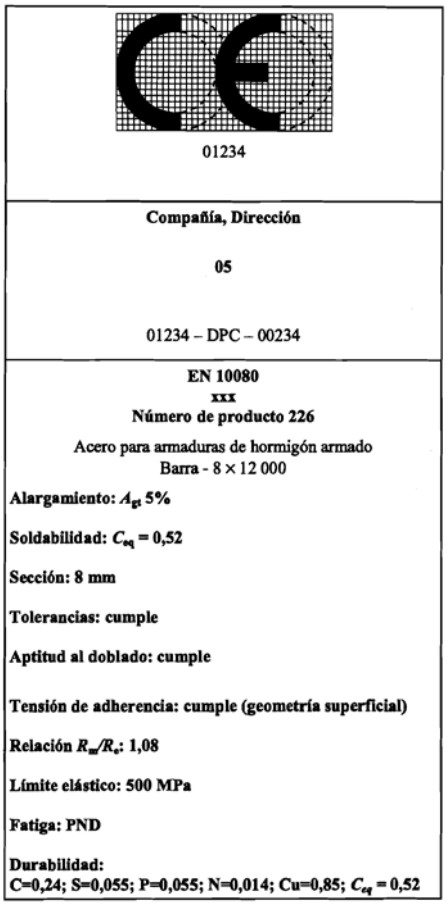

Until the CE marking has entered into force, a test certificate guaranteeing compliance with all of the specifications mentioned in Article 32 of this Code. The documentation shall also contain:

- Name of laboratory

In the case of a laboratory that is not a public laboratory as covered in Section 78.2.2.1, a statement from the laboratory that it is accredited, pursuant to Standard UNE EN ISO/IEC 17025, to carry out the abovementioned test.

- Date of issue of certificate
- Where applicable, bending-unbending test certificate
- Where applicable, simple bending test certificate

For particularly susceptible weldable steel, certificates of fatigue and alternative strain tests

When the manufacturer guarantees the adherence characteristics by means of the beam test laid down in Section 33.2 of this Code, he shall issue an adherence homologation certificate, which will contain, as a minimum, the following:

- Commercial brand of the steel
- Type of supply: bar or roll
- Permitted maximum variations of geometric characteristics of ribs

1.2.8 Steel for active reinforcements

Where applicable, the documentation required by the CE marking shall be forwarded. The figure shows a model example of a label for the market.

CE

01234

Any Co Ltd, PO Box 21, B-1050

06

01234-CPD-00234

EN 10138–1

wire, intended to be used for the prestressing of concrete

Force ratio – 0.9

Tensile yield strength – 1 770 MPa

Elongation at maximum force – 3,5 %

Relaxation - ≤ 2,5 %

Sections and tolerances on sizes – 19,6 mm^2 ± 2 %

Surface geometry – Indented type 1

Modulus of elasticity – 205 GPa

Corrosion resistance Class C1 – Pass

Until the CE marking has entered into force, a test certificate guaranteeing compliance with all of the specifications mentioned in Article 34 of this Code shall be included. The documentation shall also contain:

- Name of laboratory

In the case of a laboratory that is not a public laboratory, as covered in Section 78.2.2.1, a statement from the laboratory as being accredited pursuant to Standard UNE EN 17025, to carry out the abovementioned test.

- Date of issue of certificate
- Tension test certificate
- Where applicable, bending-unbending test certificate
- Where applicable, simple bending test certificate
- Where applicable, skewed tension test certificate

1.2.9 Passive reinforcements

In the case of electrowelded(wire fabrics) meshes and basic reinforcements electrowelded in a lattice, the documentation required in the CE marking shall be forwarded from the date of its entry into force.

Prior to the abovementioned entry into force, a certificate of guarantee from the manufacturer shall be forwarded signed by a suitably qualified physical person containing all of the characteristics laid down in this Code.

In the case of reinforcements prepared according to the design project, a certificate of guarantee confirming compliance with all the specifications pursuant to this Code shall be included, along with a test results certificate. The documentation shall also contain:

- Name of the laboratory carrying out the tests

In the case of a laboratory that is not a public laboratory as covered in Section 78.2.2.1, a statement from the laboratory that it is accredited, pursuant to Standard UNE EN ISO/IEC 17025, to carry out the abovementioned test.

- Date of issue of certificate
- Where applicable, certificate of junction detachment test
- Where applicable, certificate of bending-unbending tests and simple bending test
- Where applicable, certificate of qualifications of the personnel carrying out non-resistant welding
- Where applicable, certificate of type-approval of welders and the welding process

A copy of the documentation relating to steel for passive reinforcements shall also be forwarded pursuant to Section 1.2.7 of this Annex.

1.2.10 Prestressing systems

The documentation required by the CE marking shall be forwarded. There is no labelling model to which the supplier of prestressing must adhere, when this is done by means of a specific European technical suitability document for each year. All suppliers must choose the labelling model that they deem appropriate, which must bear the following information:

The letters CE must be followed by the identification number of the certification body

- Number and registered address of the supplier
- Identification of the product
- The last two digits of the year in which the marking was attached
- Number of the CE conformity certificate for the product
- Number of the technical approval document
- Technical approval guidelines number (ETAG 013)

Steel specifications

- Type: bar, wire or cord
- Maximum unit load
- Nominal cross-section
- Relaxation at 1000 hours for an initial tension equal to 70% of the guaranteed maximum unit load
- Elasticity module

Specifications of tendons

- Type
- Corrosion protection
- Specifications of anchorages
- Weight of the tendon
- Maximum unit load
- Curve friction coefficient (μ)
- Parasite friction coefficient (k)
- Minimum curve radius
- Inside and outside diameter of the sheath, and thickness
- Maximum separation between the supports of the sheath

Specifications of anchorages

- Type of anchorage
- Minimum separation between mass centers, with indication of the average strength of the concrete
- Minimum separation between plates, with indication of the average strength of the concrete
- Penetration of wedge

1.2.11 Prefabricated components

Where applicable, the documentation required by the CE marking shall be forwarded. Where those prefabricated components in which it is declared that the materials specified in the manufacturing plan pursuant to the project have been used, and prepared in such a way that the manufacturing process complies with the manufacturing plan pursuant to the project (method 3 of those laid down in the scope of Directive 89/106/EEC), the CE marking shall include the following information:

- Properties of the materials used
- Geometric data of the element: dimensions, sections and tolerances
- Quality control plan of the manufacturing process

For those prefabricated components deemed to comply with the essential requirements by means of the indication of the element's geometric data and the properties of the component materials and the products used (method 1), the following information must be included in the CE marking:

- Geometric data of the element: dimensions, sections and tolerances
- Properties of materials and products used that are necessary both for calculating

the bearing capacity and for other relevant properties of the component: durability, functionality, etc
- For components whose properties are determined by Eurocodes (method 2), the CE marking shall include the following information
- Characteristic values of resistance and other properties of the cross section whereby it is possible to calculate the bearing capacity and the other relevant properties of the component
- Values for calculating the properties of the element. National parameters shall be used to obtain these values and in the case of the National Annexes not having been prepared, those recommended in the Eurocodes shall be used.

For other products for which the CE marking is not in force, the certificate guaranteeing compliance with all of the specifications relating to passive reinforcements, active reinforcements and concrete laid down in this Code shall be included. The document shall also contain:

- Name of laboratory
- In the case of a laboratory that is not a public laboratory as covered in Section 78.2.2.1, a statement from the laboratory that it is accredited, pursuant to Standard UNE EN 17025, to carry out the abovementioned test.
- Date of issue of certificate
- Certificate of concrete composition mentioned in Annex 27 to this Code
- Where applicable, a certificate that the tests implement the provisions laid down in Annex 27: resistance to compression and depth of water penetration
- Where applicable, certificate of qualifications of the personnel carrying out non-resistant welding
- Where applicable, certificate of qualification recognition of welders and the welding process

Prior to supply, the following documentation relating to suppliers of materials used in the preparation of passive reinforcements shall be forwarded:

- Documentation corresponding to the CE marking or, where applicable, certificates of tests guaranteeing compliance with the specifications laid down in this Code.
- Where applicable, declarations of having an officially recognised quality mark.
- Where applicable certificate of adherence test

2. Documents during the supply

With the delivery of any material or product, the supplier shall provide a supply sheet including, at least, the information detailed below specifically for each material or product.

2.1 Aggregates

- Identification of the supplier
- Serial number of the supply sheet
- Name of the quarry
- Identification of the applicant
- Delivery date
- Quantity of the aggregate supplied
- Designation of the aggregate is specified in Section 28.2 of these Guidelines

- Identification of the place of supply

2.2 Admixtures

- Identification of the supplier
- Identification of the CE marking certificate
- Serial number of the supply sheet
- Identification of the applicant
- Delivery date
- Quantity supplied
- Designation of the admixture as specified in Section 29.2 of these
- guidelines
- Identification of the place of supply

2.3 Additions

- Identification of the supplier
- Number of the CE marking for fly ash
- Identification of the original installation (heat generating plant or blast furnace) for fly ash or slag
- Serial number of the supply sheet
- Identification of the applicant
- Delivery date
- Designation of the addition is specified in Section 30 of this Code
- Quantity supplied
- Identification of the place of supply

2.4 Concrete

- Identification of the supplier
- Serial number of the supply sheet
- Name of the concrete plant
- Identification of the applicant
- Delivery date and time
- Quantity of concrete supplied
- Designation of the concrete is specified in Section 29.2 of this Code; there must always be compressive strength, the consistency, the maximum size of the aggregate and the type of environment to which it will be exposed.
- Actual composition of the concrete, which shall include, at least,
    - type and content of cement,
    - water/cement ratio
    - addition content, where applicable
    - type and quantity of admixtures
- Identification of cement, admixtures and additions used
- Identification of the place of supply
- Identification of the lorry transporting the concrete
- Time limit for using the concrete

2.5 Steel for passive reinforcements

- Identification of the supplier
- Number of the CE marking certificate or, where applicable, indication of own consumption
- Number of the adherence approval certificate, where applicable, as laid down in Section 32.2 of this Code
- Serial number of the supply sheet
- Name of the factory

- Identification of the applicant
- Delivery date
- Quantity of steel supplied classified by diameter and type of steel
- Diameters supplied
- Designation of types of steel supplied
- Type of supply (bar or roll)
- Identification of the place of supply

2.6 Steel for active reinforcements

- Identification of the supplier
- Number of CE marking certificate (as of the date of entry into force)
- Serial number of the supply sheet
- Name of the factory
- Identification of the applicant
- Delivery date
- Quantity of steel supplied classified by type
- Diameters supplied
- Designation of the wire, bar or cord
- Identification of the place of supply

2.7 Passive reinforcements

- Identification of the supplier
- Number of the CE marking certificate or, where applicable, indication of self consumption
- Serial number of the supply sheet
- Name of the structural ironwork installations
- Identification of the applicant
- Delivery date and time
- Identification of the steel used
- Identification of the reinforcement
- Identification of the place of supply

2.8 Prestressing systems

- Identification of the supplier
- Number of CE marking certificate (as of the date of entry into force), or where applicable, indication of self consumption
- Serial number of the supply sheet
- Name of operator
- Identification of the applicant
- Delivery date and time
- Identification of materials used
- Designation of components supplied
- Quantity of components supplied classified by component
- Identification of the place of supply
-

2.9. Precast components

- Identification of the supplier
- Number of CE marking certificate (as of the date of entry into force), or where applicable, indication of self consumption
- Serial number of the supply sheet

- Name of prefabrication installation
- Identification of the applicant
- Delivery date and time
- Identification of materials used
- Designation of components supplied
- Quantity of components delivered
- Identification of the place of supply

3. Documents after the supply

3.1 Certificate of final guarantee of supply

Suppliers of materials or products covered by this Code shall provide a final supply certificate, detailing all materials or products supplied.

The supply certificate must retain the necessary traceability of the materials or products certified.

The box below contains a model with the minimum information that the supply certificate must contain

SUPPLY CERTIFICATE

Name of the supply company _____

Name and position of the person in charge of he supply :_____

Address:_____

Identification of the declarant (name, address, telephone/fax number, identity document

(VAT number/Passport)

I hereby certify that:

The company_____ _____

Identification of the declarant (name, address, telephone/fax number, identity document (VAT number/Passport)

Has supplied _____ the products below detailed

[Place of receipt of material or product]

_____ _____ _____ _____

_____ _____ _____ _____

Date *Delivery number* *Material Identification* *Quantity*

In the period between the declaration of being in possession of an officially recognised quality mark and the last supply, the quality mark in question has neither been suspended nor withdrawn. *(where applicable)*

I hereby declare that I am responsible for the compliance of the above supply with the provisions laid down in the Code for Structural Concrete, adopted by Royal Decree of [date]

Place, date and signature

In the case of supply of concrete with SR cement, and in order to ensure the its traceability, concrete suppliers shall add to the supply certificate defined above a copy of the delivery notes or the certificate of delivery of the cement to the concrete supply plant, corresponding to the period of supply of the concrete.

4. Record of samples taken:

The record of samples of the materials or products covered by this Code shall contain at least the following information:

- identification of the product
- Date, time and place of the taking of the samples
- Identification and signature of the persons responsible present in sampling
- Identification of the material or product from which the samples or specimens are taken, as laid down in this Code
- Number of samples taken
- Size of sample
- Code of sample

ANNEX 22

Preliminary and characteristics tests of concrete

1 Preliminary tests

This type of tests shall not be necessary, except in cases in which there has been no prior experience to provide documentary evidence for the use of concretes with the materials, composition and construction methods that are planned for specific works.

The aim of the preliminary tests is to demonstrate, through tests carried out on concrete manufactured in laboratories, that using the planned materials, dosage and construction methods it is possible to obtain concrete that presents the strength and durability conditions required by the design.

For the purposes of these tests, at least four series of samples shall be prepared from different mixes, each consisting of two samples for testing at 28 days old, for each dosage planned for use in the works, proceeding in accordance with the methods for the preparation of samples and for the performance of the strength and durability tests included in this Code.

In the case of compressive strength, the values obtained in this way shall be used to determine an average laboratory strength, f_{cm}, which must be sufficiently high in order that it may be feasibly expected that, with the scattering introduced by the planned manufacturing methods for its use in the works, the actual on-site characteristic strength will be greater, by a sufficient margin, than the characteristic strength specified by the design.

The preliminary tests provide information for estimating the average value of the property studied, but are not sufficient to determine the statistical distribution followed by the concrete of the works. Given that neither the specifications in this Code nor the additional specifications included in the design refer in general to average values, as in the case of strength, it is necessary to adopt a series of hypotheses to enable decisions to be made regarding the validity of the dosages tested.

In general, Gaussian distribution may be permitted, with a population standard deviation or coefficient of variation that must be based on the data obtained from the production inspection at the facility at which the concrete will be manufactured. Obviating the variation that exists between the populations of laboratory concrete and those actually manufactured for the works, in the case of strength, the following minimum requirements may be made:

$$\overline{x_n} \geq f_{ck} + 2\sigma$$

where $\overline{x}_n$ is the average strength of the sample obtained during the tests and f_{ck} is the characteristic strength specified in the design.

Standard deviation, σ, is a basic piece of information required for this type of estimate. Where this value is not known for the manufacturing facility to be used, it may be assumed as an initial approximation that:

$$\sigma = 4 N/mm^2$$

The formula above corresponds to certain average conditions of proportioning by weight, with separate and differentiated storage of all component materials and correction of the quantity of water for the humidity incorporated in the aggregates where, in addition, the scales and measuring devices are checked periodically and the raw materials are inspected on receipt or at source.

The information provided by the preliminary laboratory tests is key to the successful completion of the works, which is why the technical management needs to be aware of it. In particular, making up the maximum number of samples aged less than 28 days may prove very useful.

2 Characteristic tests for strength

This type of testing shall not be necessary, except in cases in which there has been no prior experience to provide documentary evidence for the use of concretes with the materials, dosage and construction methods that are planned for the works. The purpose of the tests is to check, before supply begins, that the characteristics of the concrete to be used in the works are not inferior to those specified by the design.

The tests shall be carried out on 28-day-old samples from six different mixes, for each type of concrete to be used in the works. Two samples shall be cast per mix, which shall be manufactured, stored and tested in accordance with the methods laid down in this Code.

For compressive strength, the average value corresponding to each batch shall be calculated from the individual failure results, enabling a series of six average results to be obtained:

$$x_1 \leq x_2 \leq \ldots\ldots \leq x_6$$

The Project Management shall accept the dosage and corresponding construction method, for the purposes of strength, where:

$$\overline{x_6} - 0{,}8.(x_6 - x_1) \geq f_{ck}$$

If this is not the case, the concrete shall not be accepted and the plant manager must make the appropriate corrections in order that the aforementioned conditions may be met. In the meantime, the start of the supply of concrete shall be postponed until new characteristic tests have shown that an acceptable dosage and manufacturing method has been achieved.

It may be useful to test different initial dosages, because if one dosage only is prepared and the required behaviour is not achieved with this mix, the process must begin again, causing the work to be delayed.

3 Characteristic tests for dosage

The aim of these tests is to check, before any concrete is supplied, that the dosages to be used comply with the durability criteria laid down in this Code. Where characteristic strength tests are also required, both sets of tests may be conducted at the same time.

Independent series of tests shall be carried out for each type of concrete to be used in the works, in order that their respective dosages may be characterised. The aforementioned tests shall include at least compressive strength tests and tests to determine the depth of water penetration under pressure.

Furthermore, the Project Technical Specifications or the Project Management may stipulate that further tests shall be carried out in order to determine additional characteristics including, for example, to determine the carbonatation speed or chloride ion diffusion coefficient where the design includes an estimate of the useful life of the structure, in accordance with Annex 9 in this Code.

Before supply begins, three series of four samples shall be made, from three mixes manufactured in the plant with the same dosage as that to be used in the works. In each series, two samples shall undergo the strength test and two further samples shall undergo the depth of water penetration test. Samples must be taken at the facility that will be used to manufacture the concrete during construction. The time at which this operation is to be carried out, and the laboratory responsible for manufacturing, storing and testing the samples, must be chosen with

the prior approval of the person responsible for accepting the concrete, the concrete supplier and, where appropriate, the constructor or prefabricator.

The tests shall be performed in accordance with Section 86.3 of this Code. A report shall be compiled of the results of both the strength tests and the tests to determine the water penetration depth. The actual dosage and raw materials used in the concrete tested shall also be specified.

The average values of the results of the water penetration depth tests obtained for each series shall be arranged in accordance with the following criterion:

- maximum penetration depths: $Z_1 \leq Z_2 \leq Z_3$
- average penetration depths: $T_1 \leq T_2 \leq T_3$

In order to be accepted, the concrete tested must comply with all of the following conditions:

Environmental exposure class	Maximum depth specifications	Average depth specifications
IIIc, Qc Qb (only in the case of prestressed elements)	$Z_m = \frac{Z_1 + Z_2 + Z_3}{3} \leq 30\ \text{mm}$ $Z_3 \leq 40\ \text{mm}$	$T_m = \frac{T_1 + T_2 + T_3}{3} \leq 20\ \text{mm}$ $T_3 \leq 27\ \text{mm}$
IIIa, IIIb, IV, Qa, E, H, F, Qb (in the case of plain or reinforced elements)	$Z_m = \frac{Z_1 + Z_2 + Z_3}{3} \leq 50\ \text{mm}$ $Z_3 \leq 65\ \text{mm}$	$T_m = \frac{T_1 + T_2 + T_3}{3} \leq 30\ \text{mm}$ $T_3 \leq 40\ \text{mm}$
I, IIa, IIb (no specific class)	This check is not required	This check is not required

The values obtained from the compressive strength tests shall be used to determine the average results for each series,

$$X_1 \leq X_2 \leq X_3 \ldots$$

The minimum characteristic strength compatible with the durability criteria shall be defined by applying one of the following expressions:

- where characteristic strength tests are carried out simultaneously, with six series of samples:

$$f_{c,dosif} = \overline{x_6} - 0{,}80.(x_6 - x_1)$$

- in other cases, with three series of samples:

$$f_{c,dosif} = \overline{x_3} - 1{,}35.(x_3 - x_1)$$

where $\overline{x_i}$ is the average strength of a number, “i”, of series tested.

The Project Management shall allow the supply of concrete to begin when the following conditions are all met simultaneously:

- the value of $f_{c,dosif}$ is not less than the corresponding value in Table 37.3.2.b,
- the value of $f_{c,dosif}$ is not less than the value of f_{ck} laid down in the design.

The Project Management shall allow the supply of concrete to begin if the value of $f_{c,dosif}$ is not below the value of f_{ck} laid down in the design, and is not more than 5 N/mm^2 below that specified in Table 37.3.2.b.

The Project Management may change the specification of the concrete ordered if the value of $f_{c,dosif}$ corresponds to a strength classification, of the series recommended in 39.2, higher than that specified in the design. The acceptance inspection for strength will therefore be carried out in accordance with the new specification.

The laboratory that carried out the tests shall draw up a dosage certificate, providing at least the following information:

- laboratory accreditation,
- identification of the plant,
- classification name of the concrete,
- where appropriate, the quality mark of the concrete and the complete reference of the provision by which it was officially recognised,
- actual dosage of the concrete tested, including complete identification of the raw materials used,
- individual results of the compressive strength tests and the value calculated for $f_{c,dosif}$,
- results of the water penetration depth tests,
- where appropriate, explicit statement of the conformity of the concrete tested with the requirements of this article,

date on which the tests were performed and period for which the certificate is valid, which may

ANNEX 23

Preparation procedure by straightening of steel samples from coils, for mechanical characterisation

1. Introduction

The purpose of this Annex is to lay down the conditions governing the preparation and straightening of samples extracted from supplies of corrugated steel coils which must be carried out prior to all of the mechanical characterisation tests set out in this Code.

2. Sampling

Samples shall be extracted directly from finished coils, ready for supply. Complete spires shall then be extracted from the coil.

Each time samples are taken, a total of three spires shall be obtained from each coil subject to inspection. From each spire, two equal samples shall be obtained, consisting of half spires.

From each spire, one of the samples (half spire) shall be used for the inspection laboratory tests and the other, duly identified with the corresponding seals, shall held in safekeeping by the manager of the facility at which sampling is carried out (steel fabrication plan, ironwork fabrication, construction site, etc.), where they shall be stored, without being deformed or handled, in order that they be accurate as re-test samples for a period of one month following the sampling date.

3. Equipment for the preparation of samples by straightening

The samples extracted from the coil shall undergo a straightening process using a suitable machine. This machine shall have a total of eight rollers of equal diameter (four drive rollers to move the steel along and four other free rollers), which may be manoeuvred into a vertical position in order to adjust the axis of the bar, and shall be staggered, as shown in Figure A23.1. Table A23.1 indicates the diameter of the rollers and the spacing between them.

Table A23.1

Type of roller	Geometric characteristics			
	Roller diameter (mm)		Horizontal spacing between rollers (mm)	
	∅≤12	∅>12	∅≤12	∅>12
Drive or free	140 ± 2%	180 ± 2%	175 ± 2%	330 ± 2%

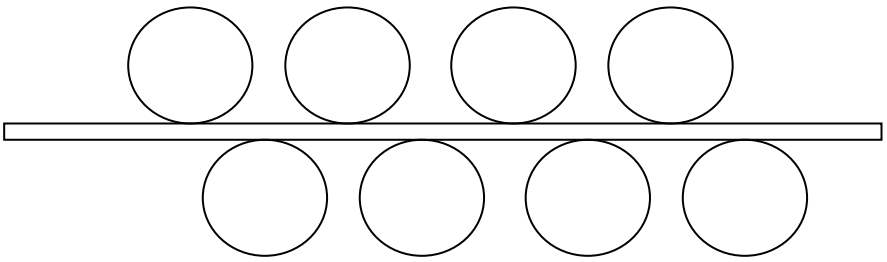

Figure A23.1

The straightening machine must keep a continuous record of the conditions under which the straightening is performed (position of the rollers, speed of the machine, etc.).

4. Procedure for the preparation of samples by straightening

Once the sample has been straightened, 35 cm shall be taken off each end. The effectiveness of the straightening shall then be checked, with any straightened half spires being rejected where, once the ends have been taken off, there is a greater than 5 mm/m deviation from straight alignment. The samples may then be cut for subsequent mechanical characterisation testing in accordance with the procedures laid down in this Code.

ANNEX 24

Recommendations on auxiliary construction elements for concrete bridges

1 Scope

When building bridges, ancillary structures and elements are normally used in order to facilitate the building process, so that the work may be carried out as effectively as possible, from the technical as well as economic point of view.

The ancillary structures and elements used in the construction of bridges are diverse, being able to present different characteristics according to the methods of execution and the singularity of the works.

Additionally, the constructive techniques are submitted to a continuous evolution and updating, incorporating new technological advances with the aim of improving the processes constructive, and for whose application it can be required the design and construction of specific auxiliary elements.

The diversity of ancillary structures and elements existing, and those others that could be used in the future, does necessary to establish complementary recommendations with the aim of facilitating and unify, as much as possible, what is related to their design, use, assembling, and dismantling of these auxiliary elements to be used in the construction of bridges.

The purpose of this Annex is to establish recommendations with the above objective and addressed with priority to the continuous improvement of the safety in construction works.

2 Classification of ancillary elements used in the construction of bridges

To the effects of the application of this Annex, the structures and auxiliary elements for the construction of bridges can be classified in:

- Auxiliary elements type 1: falsework, framed falsework, slipform for piers, crane towers, elevation means to reach piles and decks, supporting towers, and
- Auxiliary elements type 2: mobile falseworks, launching girders, formwork advancing wagons for cantilever bridges, cantilever advancing wagons and deck pushing devices.

3 Design of ancillary elements

For any type of ancillary device used in the construction of a bridge, the Constructor must draw up a complete specific project for its use endorsed by the corresponding Professional Association . In an annexe of this project shall be included, et least, the following documents:

- For auxiliary elements type 1: calculation report; definition drawings for all components and a handbook with the procedures the for first mounting, and
- For auxiliary elements type 2: beside the previously described documents, has to be included a handbook for movements instructions in mobile elements, for placing concrete operations, if were the case, and for dismounting. A kinematics study and the technical requirements of the component materials, as well as the procedure for checking the acceptance.

All these documents have to be signed by a competent technician, with accredited experience in bridges and ancillary elements used in the construction.

In addition, where the ancillary equipment supports or amends the structure of the element being built, the contractor shall, prior to its use, submit to the Project Management a report drawn up by the designer of the building element that shows that it will support the loads transferred by the ancillary device with the same quality and safety as laid down in the aforementioned design.

4 Fulfillment of the current legislation

All ancillary equipment used in the construction of bridges, the components thereof and the projects for their utilization shall bear with the specific current applicable regulations in Spain as well in the EU and be in possession of the CE marking, provided this marking is in force.

5 Assembly, use and disassembly of ancillary elements

During the assembly, use and dismantling phases of any ancillary element for the construction of bridges, and during the functioning and transfer of any mobile component, all operations relating to these phases must be supervised and coordinated by experts with appropriate academic and professional qualifications, who must be assigned to the company owning the ancillary element. They shall be on site, permanently and exclusively dedicated to each ancillary element, and must moreover verify that said elements comply with the draft specifications, both with regard to their construction and their operation. In case of ancillary elements type 2, every technician shall have permanent and exclusive dedication to every ancillary element.

In addition, after the assembly of the ancillary structure or element, and before it enters into service, a certificate shall be issued by the company owning the ancillary element, signed by a competent expert, stating that it has been correctly assembled and that it complies with the draft and with the regulation in force. The certificate must be countersigned by the constructor where this entity is not the same as the company owning the ancillary element. A copy of the certificate shall be forwarded to the Project Management designed by the Owner.

The Work Manager shall be responsible for ensuring that the use of the ancillary device, during construction, complies with the design and in the corresponding manuals, and shall lay down volumes and performance to be obtained by each unit, in accordance with the characteristics of the ancillary element, so that the safety conditions laid down in the design are guaranteed at all times.

6 Reuse of ancillary elements

In case of ancillary elements type 2, mobile elements previously used in other structures, and having only studies for adaptation, shall not be used in a new construction. Their components elements could be used, provided that they were included in the specific project referred to in Article 3